EPSON
EXCEED YOUR VISION

Industrial Robot: SCARA Robots

G series

Manual

Rev.4 ENM226R5370F

Original instructions

G series Manual Rev.4

Industrial Robot: SCARA Robots

G series Manual

Rev.4

FOREWORD

Thank you for purchasing our robot products.
This manual contains the information necessary for the correct use of the robot controller.
Please carefully read this manual and other related manuals before installing the robot system.
Keep this manual handy for easy access at all times.

The robot system and its optional parts are shipped to our customers only after being subjected to the strictest quality controls, tests, and inspections to certify its compliance with our high performance standards. Please note that the basic performance of the product will not be exhibited if our robot system is used outside of the usage conditions and product specifications described in the manuals.

This manual describes possible dangers and consequences that we can foresee. Be sure to comply with safety precautions on this manual to use our robot system safety and correctly.

TRADEMARKS

Microsoft, Windows, and Windows logo are either registered trademarks or trademarks of Microsoft Corporation in the United States and/or other countries. Other brand and product names are trademarks or registered trademarks of the respective holders.

NOTICE

No part of this manual may be copied or reproduced without authorization.
The contents of this manual are subject to change without notice.
Please notify us if you should find any errors in this manual or if you have any comments regarding its contents.

MANUFACTURER

SEIKO EPSON CORPORATION

CONTACT INFORMATION

Contact information is described in “SUPPLIERS” in the first pages of the following manual:

Robot System Safety Manual Read this manual first

DISPOSAL

When disposing this product, dispose in accordance with the laws and regulations of each country.

Regarding battery disposal

The battery removal/replacement procedure is described in the following manuals:
Maintenance Manual

For European Union customers only

The crossed out wheeled bin label that can be found on your product indicates that this product and incorporated batteries should not be disposed of via the normal household waste stream. To prevent possible harm to the environment or human health please separate this product and its batteries from other waste streams to ensure that it can be recycled in an environmentally sound manner. For more details on available collection facilities please contact your local government office or the retailer where you purchased this product. Use of the chemical symbols Pb, Cd or Hg indicates if these metals are used in the battery.

This information only applies to customers in the European Union, according to DIRECTIVE 2006/66/EC OF THE EUROPEAN PARLIAMENT AND OF THE COUNCIL OF 6 September 2006 on batteries and accumulators and waste batteries and accumulators and repealing Directive 91/157/EEC and legislation transposing and implementing it into the various national legal systems.
For other countries, please contact your local government to investigate the possibility of recycling your product.

For Taiwanese customers only

Please separate used batteries from other waste streams to ensure that it can be recycled in an environmentally sound manner. For more details on available collection facilities please contact your local government office or the retailer where you purchased this product.

Before Reading This Manual

This section describes what you should know before reading this manual.

Structure of Control System

The G series Manipulators can be used with the following combinations of Controllers and software.

Controller		Software
Name	Structure	
RC700-A	Control Unit Drive Unit	EPSON RC+ 7.0 Ver.7.1.2 or later

The motions of the manipulators such as in emergency stops vary depending on the Controllers since they have different control methods. Details are described in the manual.

Setting by Using Software

EPSON RC+

This manual contains setup procedures using the software.
Those sections are indicated by the symbol on the left.

Turning ON/OFF Controller

When you see the instruction “Turn ON/OFF the Controller” in this manual, be sure to turn ON/OFF all the hardware components.

Shape of Motors

The shape of the motors used for the Manipulator that you are using may be different from the shape of the motors described in this manual because of the specifications.

Photos and Illustrations Used in This Manual

The appearance of some parts may differ from those on an actual product depending on when it was shipped or the specifications. The procedures themselves, however, are accurate.

Figures in this Manual

The figures of manipulators indicated in this manual are basically Standard-model Manipulator. Unless special instruction is provided, the specifications of Standard-model and Cleanroom-model are the same.

The Manuals of This Product

The following are typical manual types for this product and an outline of the descriptions.

Safety Manual (book, PDF)

This manual contains safety information for all people who handle this product. The manual also describes the process from unpacking to operation and the manual you should look at next.

Read this manual first.

- Safety precautions regarding robot system and residual risk
- Declaration of conformity
- Training
- Flow from unpacking to operation

RC700 series Manual (PDF)

This manual explains the installation of the entire robot system and the specifications and functions of the controller. The manual is primarily intended for people who design robot systems.

- The installation procedure of the robot system (specific details from unpacking to operation)
- Daily inspection of the controller
- Controller specifications and basic functions

G series Manual (PDF)

This manual describes the specifications and functions of the Manipulator. The manual is primarily intended for people who design robot systems.

- Technical information, functions, specifications, etc. required for the Manipulator installation and design
- Daily inspection of the Manipulator

Status Code/Error Code List (PDF)

This manual contains a list of code numbers displayed on the controller and messages displayed in the software message area. The manual is primarily intended for people who design robot systems or do programming.

RC700 series Maintenance Manual (PDF)
G series Maintenance Manual (PDF)

This manual describes the details of maintenance etc. The manual is intended for people who perform maintenance.

- Daily inspection
- Replacement and repair of maintenance parts
- The method of firmware update and controller setting backup etc.

EPSON RC+ 7.0 User's Guide (PDF)

This manual describes general information about program development software.

EPSON RC+ 7.0 SPEL+ Language Reference (PDF)

This manual describes the robot programming language "SPEL+".

Other Manual (PDF)

Manuals for each option are available.

G1 Manipulator

G3 Manipulator

G6 Manipulator

G10 G20 Manipulator

Regular Inspection

Appendix

G1 Manipulator

This volume contains information for setup and operation of the Manipulators.
Please read this volume thoroughly before setting up and operating the Manipulators.

1. Safety

Unpacking and transportation of the Manipulators and robotic equipment shall be performed by personnel who has taken robot system training held by us and suppliers and should conform to all national and local codes.
Please read this manual and other related manuals before installing the robot system or before connecting cables.
Keep this manual handy for easy access at all times.

1.1 Conventions

Important safety considerations are indicated throughout the manual by the following symbols. Be sure to read the descriptions shown with each symbol.

WARNING	This symbol indicates that a danger of possible serious injury or death exists if the associated instructions are not followed properly.
WARNING	This symbol indicates that a danger of possible serious injury caused by electric shock exists if the associated instructions are not followed properly.
CAUTION	This symbol indicates that a danger of possible harm to people or physical damage to equipment and facilities exists if the associated instructions are not followed properly.

1.2 Design and Installation Safety

This product is intended for transporting and assembling parts in a safely isolated area.
Design and installation of robot system shall be performed by personnel who has taken robot system training held by us and suppliers.
To ensure safety, a safeguard must be installed for the robot system. For details on the safeguard, refer to the *Installation and Design Precautions* in the *Safety* chapter of the *EPSON RC+ User's Guide*.

The following items are safety precautions for design personnel:

⚠ WARNING	■ Personnel who design and/or construct the robot system with this product must read *"Safety Manual"* to understand the safety requirements before designing and/or constructing the robot system. Designing and/or constructing the robot system without understanding the safety requirements is extremely hazardous, may result in serious bodily injury and/or severe equipment damage to the robot system, and may cause serious safety problems. ■ The Manipulator and the Controller must be used within the environmental conditions described in their respective manuals. This product has been designed and manufactured strictly for use in a normal indoor environment. Using the product in an environment that exceeds the specified environmental conditions may not only shorten the life cycle of the product but may also cause serious safety problems. ■ The robot system must be used within the installation requirements described in the manuals. Using the robot system outside of the installation requirements may not only shorten the life cycle of the product but also cause serious safety problems. ■ When designing or installing a robot system, wear at least the following protective gear. Working without protective gear may cause serious safety problems. Work clothes suitable for work Helmet Safety shoes

Further precautions for installation are mentioned in *3. Environments and Installation.* Please read this chapter carefully to understand safe installation procedures before installing the robots and robotic equipment.

1.2.1 Strength of the Ball Screw Spline

If a load exceeding the allowable value is applied to the ball screw spline, it may not work properly due to deformation or breakage of the shaft. If the ball screw spline is applied the load exceeding the allowable value, it is necessary to replace the ball screw spline unit.
The allowable loads differ depending on distance where the load is applied to. For calculating the allowable load, see the calculation formula below.

[Allowable bending moment]

G1: $M=2{,}500\ N{\cdot}mm$

Example: If 25 N load is applied
at 100 mm from
the end of the spline nut

[Moment]

$M=F{\cdot}L=100{\cdot}25=2{,}500\ N{\cdot}mm$

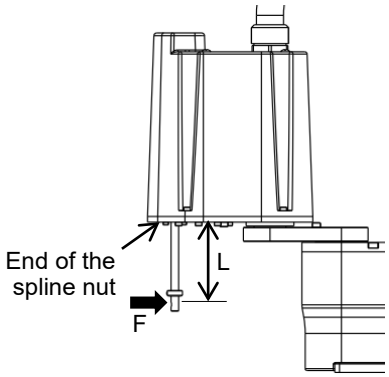

1.3 Operation Safety

The following items are safety precautions for operating personnel:

WARNING	■ Please carefully read "*Safety Manual*" before operating the robot system. Operating the robot system without understanding the safety precautions is extremely hazardous and may result in serious bodily injury and/or severe equipment damage to the robot system. ■ Do not enter the operating area of the Manipulator while the power to the robot system is turned ON. Entering the operating area with the power ON is extremely hazardous and may cause serious safety problems as the Manipulator may move even if it seems to be stopped. ■ Before operating the robot system, make sure that no one is inside the safeguarded area. The robot system can be operated in the mode for teaching even when someone is inside the safeguarded area. The motion of the Manipulator is always in restricted (low speeds and low power) status to secure the safety of an operator. However, operating the robot system while someone is inside the safeguarded area is extremely hazardous and may result in serious safety problems in case that the Manipulator moves unexpectedly. ■ Immediately press the Emergency Stop switch whenever the Manipulator moves abnormally while the robot system is operated.

WARNING	■ To shut off power to the robot system, disconnect the power plug from the power source. Be sure to connect the AC power cable to a power receptacle. DO NOT connect it directly to a factory power source. ■ Before performing any replacement procedure, turn OFF the Controller and related equipment, and then disconnect the power plug from the power source. Performing any replacement procedure with the power ON is extremely hazardous and may result in electric shock and/or malfunction of the robot system. ■ Do not connect or disconnect the motor connectors while the power to the robot system is turned ON. Connecting or disconnecting the motor connectors with the power ON is extremely hazardous and may result in serious bodily injury as the Manipulator may move abnormally, and also may result in electric shock and/or malfunction of the robot system.

CAUTION	■ Whenever possible, only one person should operate the robot system. If it is necessary to operate the robot system with more than one person, ensure that all people involved communicate with each other as to what they are doing and take all necessary safety precautions. ■ Joint #1, #2, and #4: If the joints are operated repeatedly with the operating angle less than 5 degrees, they may get damaged early because the bearings are likely to cause oil film shortage in such situation. To prevent early breakdown, move each joint larger than 50 degrees for about once an hour. Joint #3: If the up-and-down motion of the hand is less than 10 mm, move the joint a half of the maximum stroke for about once an hour. ■ Vibration (resonance) may occur continuously in low speed Manipulator motion (Speed: approx. 5 to 20%) depending on combination of Arm orientation and end effector load. Vibration arises from natural vibration frequency of the Arm and can be controlled by following measures. Changing Manipulator speed Changing the teach points Changing the end effector load

1.4 Emergency Stop

If the Manipulator moves abnormally during operation, immediately press the Emergency Stop switch. Pressing the Emergency Stop switch immediately changes the manipulator to deceleration motion and stops it at the maximum deceleration speed.

Avoid pressing the Emergency Stop switch unnecessarily while the Manipulator is running normally.

- The Manipulator may hit the peripheral equipment.
  When you press the Emergency Stop switch, the operating trajectory until the robot system stops is different from that in normal operation.
- The life of the brakes will be shortened.
  The brakes are locked and the brake friction plate is worn.
  Normal brake life cycle: About 2 years (when the brakes are used 100 times/day)
  However, the rough normal relay life is approximately 20,000 times. If you press the emergency stop switch unnecessarily, the life of the relay will be shortened.
- Impact is applied on the reduction gear unit, and it may result in the short life of the reduction gear unit.

To place the system in emergency mode during normal operation, press the Emergency Stop switch when the Manipulator is not moving.
Refer to Controller Manual for instructions on how to wire the Emergency Stop switch circuit.

Do not turn OFF the Controller while the Manipulator is operating.
If you attempt to stop the Manipulator in emergency situations, make sure to stop the Manipulator using the E-STOP of the Controller.
If the Manipulator is stopped by turning OFF the Controller while it is operating, following problems may occur.

Reduction of the life and damage of the reduction gear unit
Position gap at the joints

In addition, if the Controller was forced to be turned OFF by blackouts and the like while the Manipulator is operating, make sure to check the following points after power restoration.

Whether or not the reduction gear is damaged
Whether or not the joints are in their proper positions

If there is a position gap, perform calibration by referring to the *G series Maintenance Manual - G1 Manipulator - 13. Calibration* in the manual.

Before using the Emergency Stop switch, be aware of the followings.

- The Emergency Stop (E-STOP) switch should be used to stop the Manipulator only in case of emergencies.
- To stop the Manipulator operating the program except in emergency, use Pause (halt) or STOP (program stop) commands.
  Pause and STOP commands do not turn OFF the motors. Therefore, the brake does not function.
- For the Safeguard system, do not use the circuit for E-STOP.

To check brake problems, refer to *Regular Inspection.*

NOTE
Test pulse cannot be used with the emergency stop input of this model.

Stopping distance in emergency

The operating Manipulator cannot stop immediately after the Emergency Stop switch is pressed. In addition, stopping time and stopping distance vary by following factors:

Hand weight	WEIGHT Setting	ACCEL Setting
Workpiece weight	SPEED Setting	Posture etc.

For stopping time and stopping distance of the Manipulator, refer to "*Appendix B: Stopping Time and Stopping Distance in Emergency*".

1.5 Safeguard

To ensure safe operation, install a safety system using safety doors, light curtains, safety floor mats, etc.

When a closed safeguard is open during robot motion, the safeguard interlock function operates. The robot stops immediately and enters into pause state. Then, all robot motors are turned OFF. The descriptions below explain how the safeguard input works.

Safeguard open : The robot stops immediately, motors are turned OFF, and further operation is impossible until either the safeguard is closed or TEACH or TEST mode is turned ON and the enable circuit is engaged.

Safeguard closed : The robot can automatically operate in unrestricted (high power) state.

Do not open the safeguard unnecessarily while motor is ON. Frequent safeguard inputs affect the life of the relay.

Rough normal relay life: Approximately 20,000 times

For the safeguard, do not use the E-STOP circuit.

For details of wiring instructions, refer to the following manual:

RC700 series Manual - Functions required for designing – 11. EMERGENCY

For details of Safeguard, refer to the following manual:

RC700 series Manual - Functions required for designing – 2.7.1 Connection to EMERGENCY Connector

NOTE

Test pulse cannot be used with the safeguard input of this model.

WARNING	■ The EMERGENCY connector on the controller has a safeguard input circuit to connect the safety device interlock switch. To protect operators working near the robot, be sure to connect the interlock switch and make sure that it works properly. ■ The time to stop the robot and the stopping distance by the safeguard interlock function will change depending on the conditions of use. Be sure to confirm that safety is ensured according to the installation environment of the robot.

Stopping distance when the safeguard is opened

The Manipulator in operation cannot stop immediately after the safeguard is opened. In addition, stopping time and stopping distance vary by following factors:

Hand weight	WEIGHT Setting	ACCEL Setting
Workpiece weight	SPEED Setting	Posture etc.

For stopping time and stopping distance of the Manipulator, refer to "*Appendix C: Stopping Time and Stopping Distance When the Safeguard is Opened*".

1.6 Emergency Movement Without Drive Power

When the system is placed in emergency mode, push the arm or joint of the Manipulator by hand as shown below:

Arm #1 ..... Push the arm by hand.

Arm #2 ..... Push the arm by hand.

Joint #3 ..... The joint cannot be moved up/down by hand until the electromagnetic brake applied to the joint has been released. Move the joint up/down while pressing the brake release switch.

Joint #4 ..... Rotate the shaft by hand.

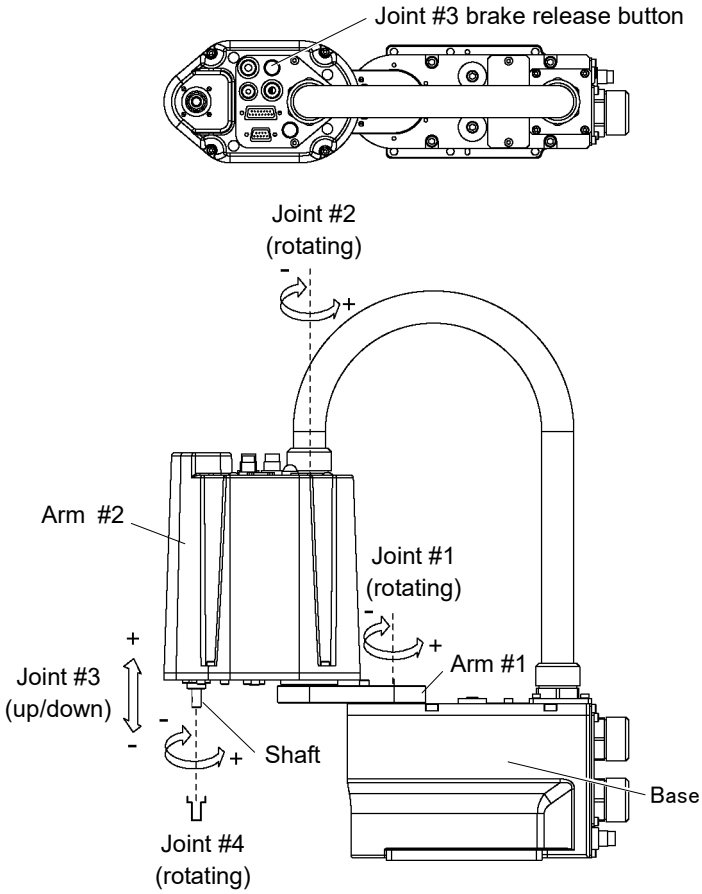

NOTE

When the brake release switch is pressed in emergency mode, the brake for Joint #3 is released. Be careful of the shaft while the brake release switch is pressed because the shaft may be lowered by the weight of an end effector.

1.7 ACCELS Setting for CP Motions

To make the Manipulator move in CP motion, see the following and set ACCELS properly according to the tip load and the Z-axis height.

NOTE

Improper setting may cause following problems.

Reduction of the life and damage of the ball screw spline

Set ACCELS as follows according to the Z-axis height.

ACCELS setting value by Z-axis position and tip load

Z position (mm)	Tip load	
	0.5 kg or less	1 kg or less
0 > Z >= - 50	25000 or less	18000 or less
- 50 > Z >= - 100	22000 or less	11000 or less

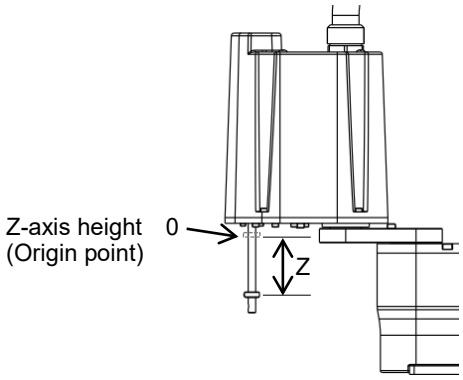

If the Manipulator is operated in CP motion with the wrong set values, make sure to check the following point.

Whether the ball screw spline shaft is deformed or bent

1.8 Warning Labels

The Manipulator has the following warning labels.

The warning labels are attached around the locations where specific dangers exist.
Be sure to comply with descriptions and warnings on the labels to operate and maintain the Manipulator safely.
Do not tear, damage, or remove the warning labels. Use meticulous care when handling those parts or units to which the following warning labels are attached as well as the nearby areas.

Location	Warning Label	NOTE
A		Before loosening the base mounting screws, hold the arm and secure it tightly with a band to prevent hands or fingers from being caught in the Manipulator.
B		Be careful to avoid collision.
C		Hazardous voltage exists while the Manipulator is ON. To avoid electric shock, do not touch any internal electric parts.
D	-	-

Location	Warning Label	NOTE
E		Be careful of the hand falling or rotating while the brake release switch is being pressed.
F		Only authorized personnel should perform sling work and operate a crane and a forklift. When these operations are performed by unauthorized personnel, it is extremely hazardous and may result in serious bodily injury and/or severe equipment damage to the robot system.

Location	Label	Note
1	–	The product name, model name, serial number, information which laws and regulations are supported, product specifications, manufacturer, importer, date of manufacture, country of manufacture, etc. are listed. For details, see the label affixed to the product.

Location of Labels

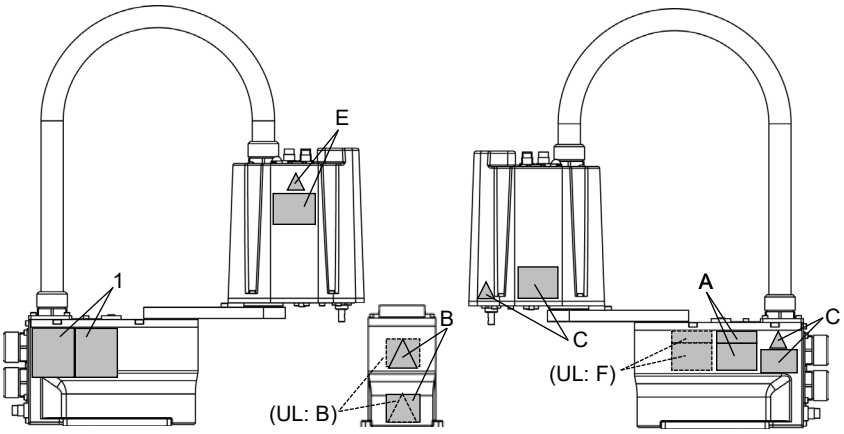

1.9 Response for Emergency or Malfunction

1.9.1 Collision

When the Manipulator collides with a mechanical stopper or peripheral device etc., discontinue use and contact the supplier.

1.9.2 Getting body caught in Manipulator

When the operator is caught between the Manipulator and a mechanical part such as a base table, press the emergency stop switch to release the brake on the subject arm, and then move the arm by hand.

Get body caught in the arms:
The break is not working. Move the arms manually.

Get body caught in the shafts:
The break is working. Press the break release switch and move the shafts.

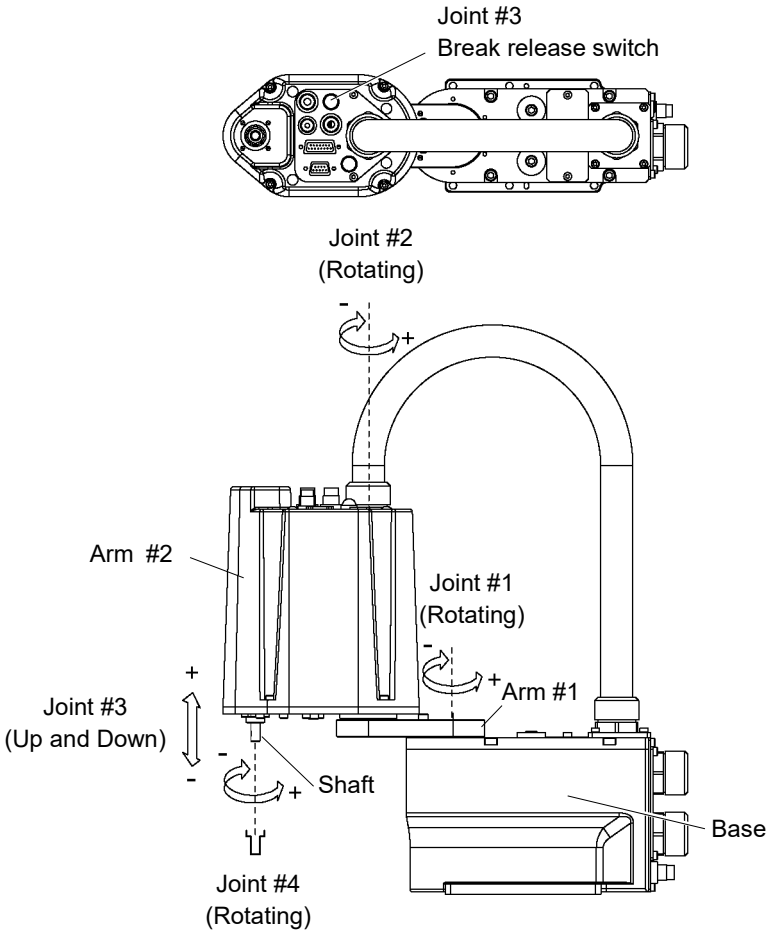

CAUTION	■ While pressing the break release switch, not only Joint #3 but also Joint #4 may move due to its own weight. Be careful of the shaft falling or rotating.

2. Specifications

2.1 Model Number

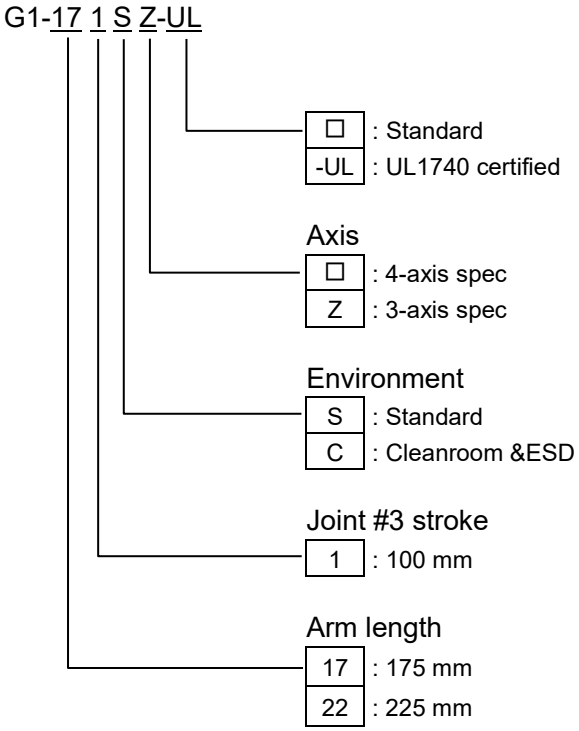

Environment

Cleanroom-model

Cleanroom-model Manipulator includes additional features that reduce dust emitted by the Manipulator to enable use in clean room environments.

For details of the specifications, refer to *Appendix A: Specifications.*

2.2 Part Names and Outer Dimensions

2.2.1 4-axis spec

Part Names : Standard-model (G1-***S)

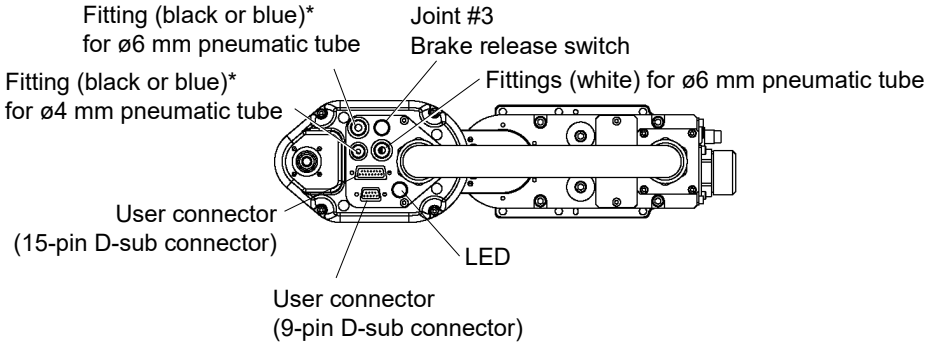

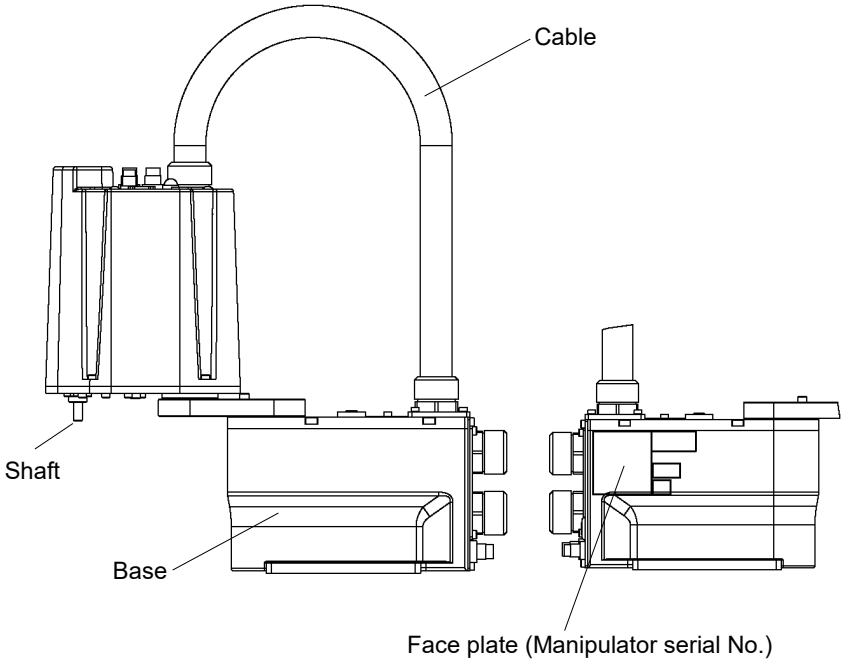

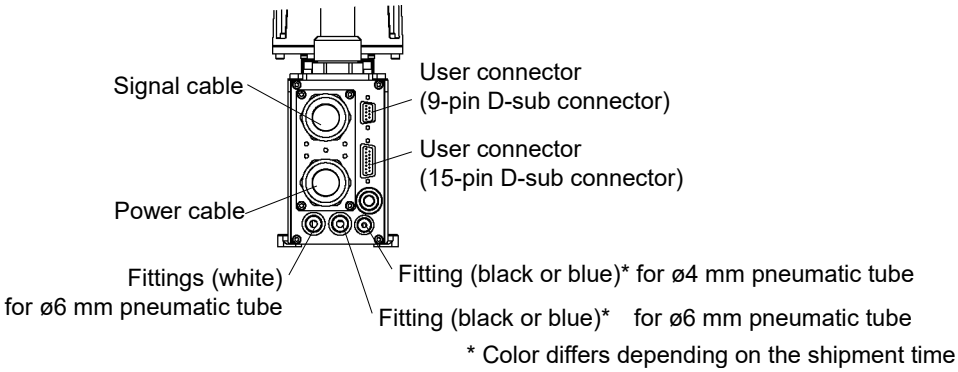

NOTE

- The brake release switch affects only Joint #3. When the brake release switch is pressed in emergency mode, the brake for Joint #3 is released simultaneously.

- When the LED lamp is lighting or the controller power is on, the current is being applied to the manipulator. Performing any work with the power ON is extremely hazardous and it may result in electric shock and/or improper function of the robot system. Make sure to turn OFF the controller power before the maintenance work.

Part Dimension : Standard-model (G1-***S)

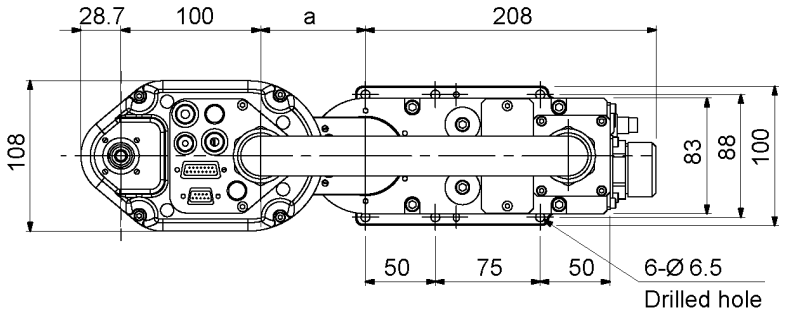

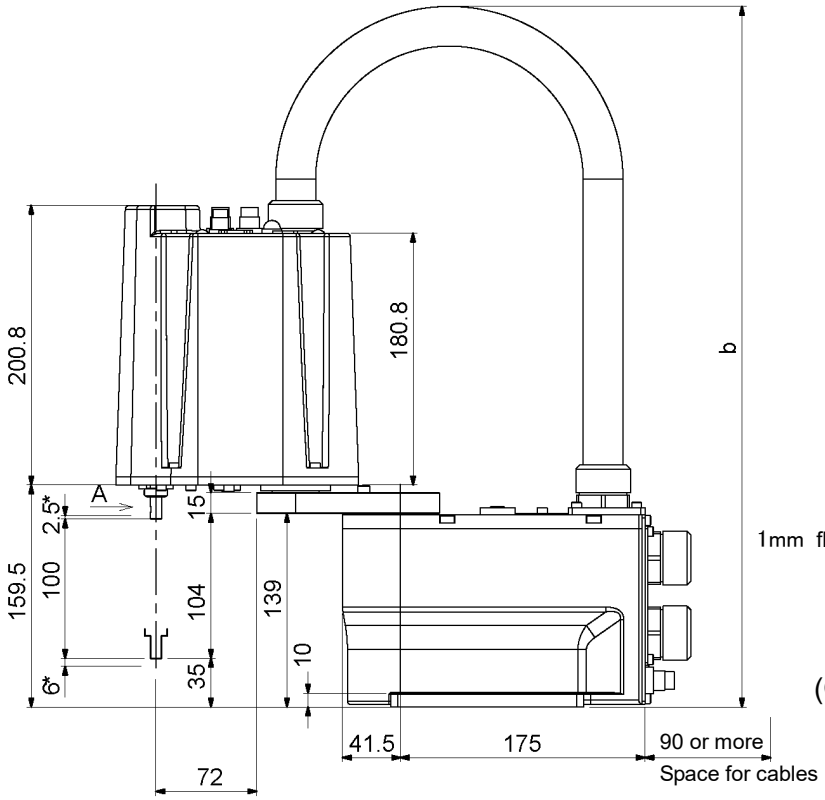

(*) indicates the stroke margin by mechanical stop.

	G1-171S	G1-221S
a	75	125
b	Max.515	Max.545

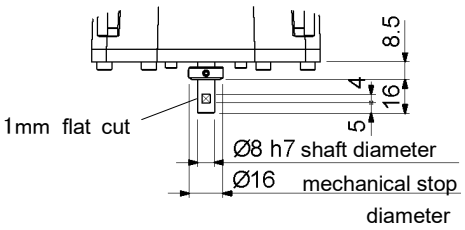

Detail of “A”
(Calibration point position of Joints #3 and #4)

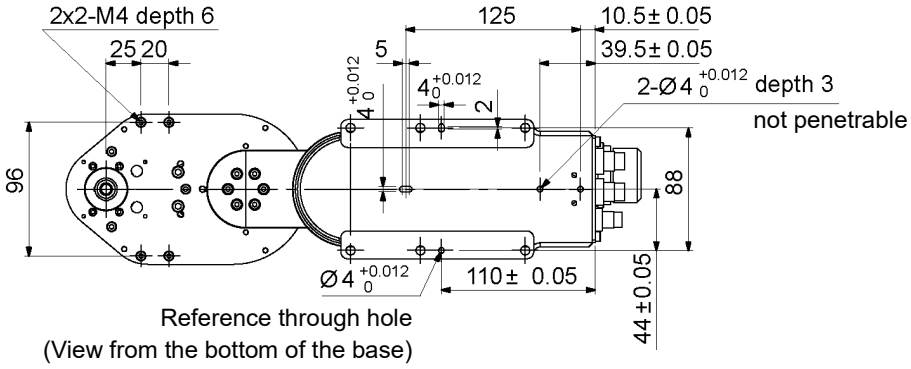

Reference through hole
(View from the bottom of the base)

Part Names : Cleanroom-model (G1-***C)

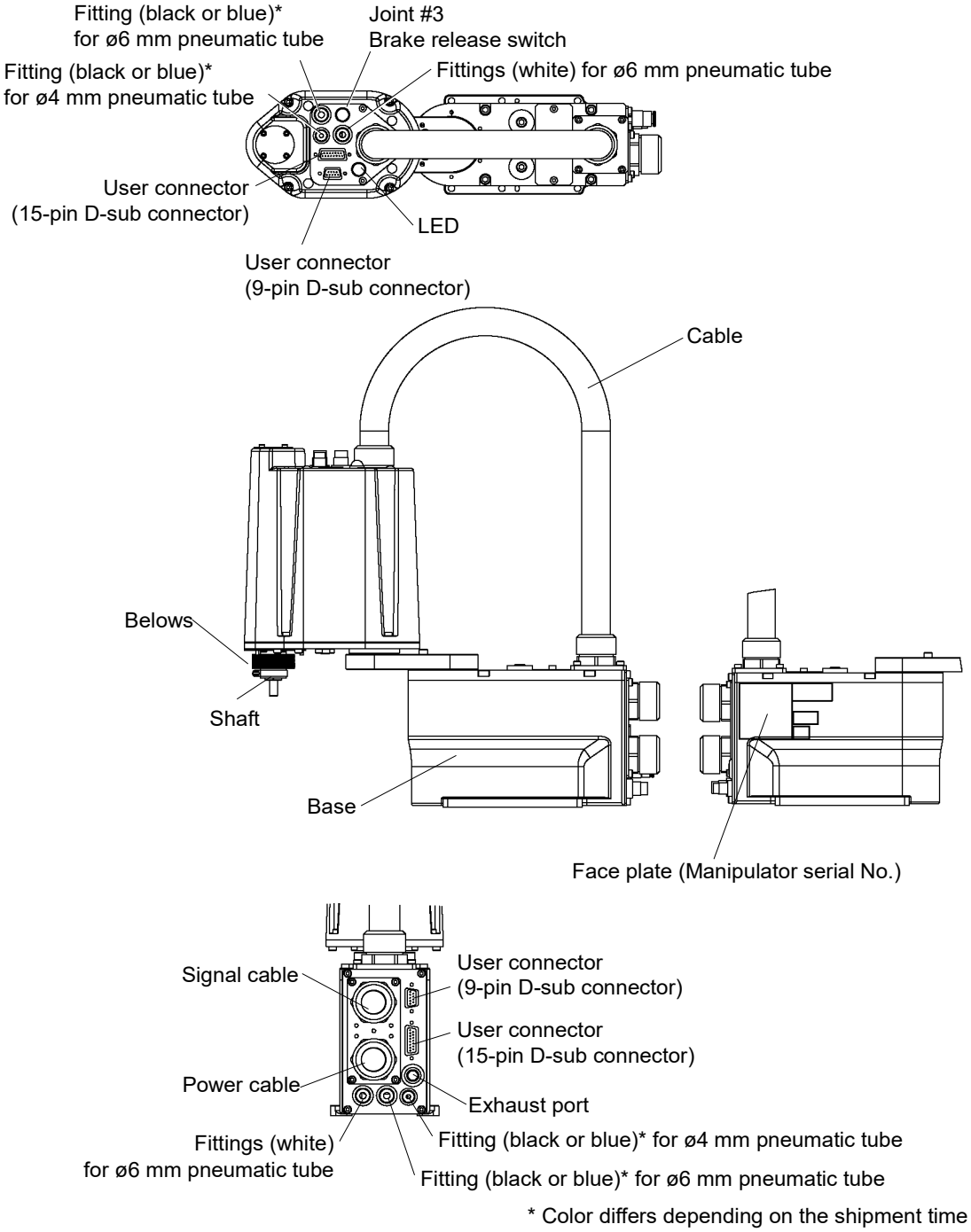

* Color differs depending on the shipment time

NOTE

- The brake release switch affects only Joint #3. When the brake release switch is pressed in emergency mode, the brake for Joint #3 is released simultaneously.

- When the LED lamp is lighting or the controller power is on, the current is being applied to the manipulator. Performing any work with the power ON is extremely hazardous and it may result in electric shock and/or improper function of the robot system. Make sure to turn OFF the controller power before the maintenance work.

Part Dimension : Cleanroom-model (G1-***C)

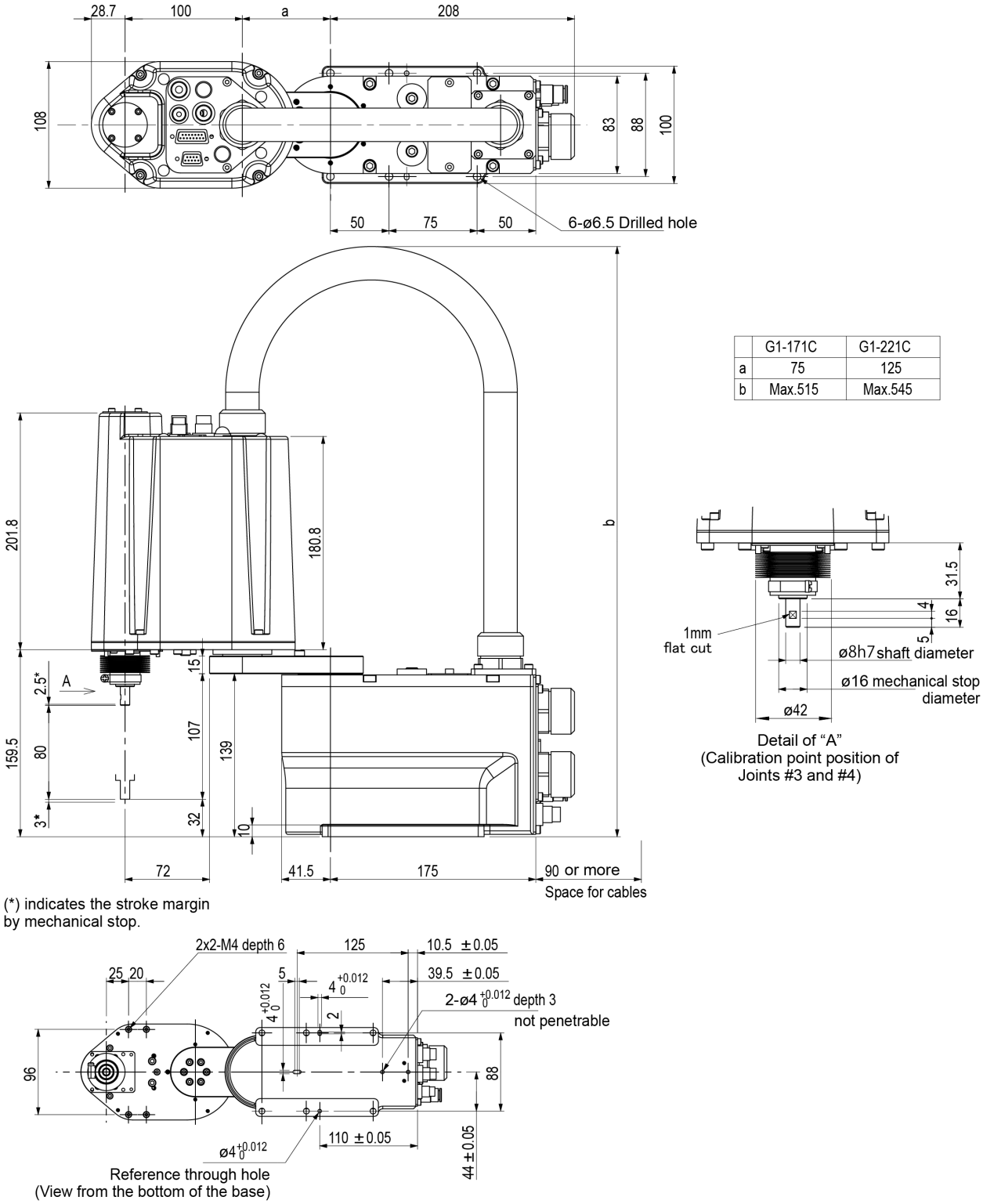

	G1-171C	G1-221C
a	75	125
b	Max.515	Max.545

2.2.2 3-axis spec

Part Names : Standard-model (G1-***Z)

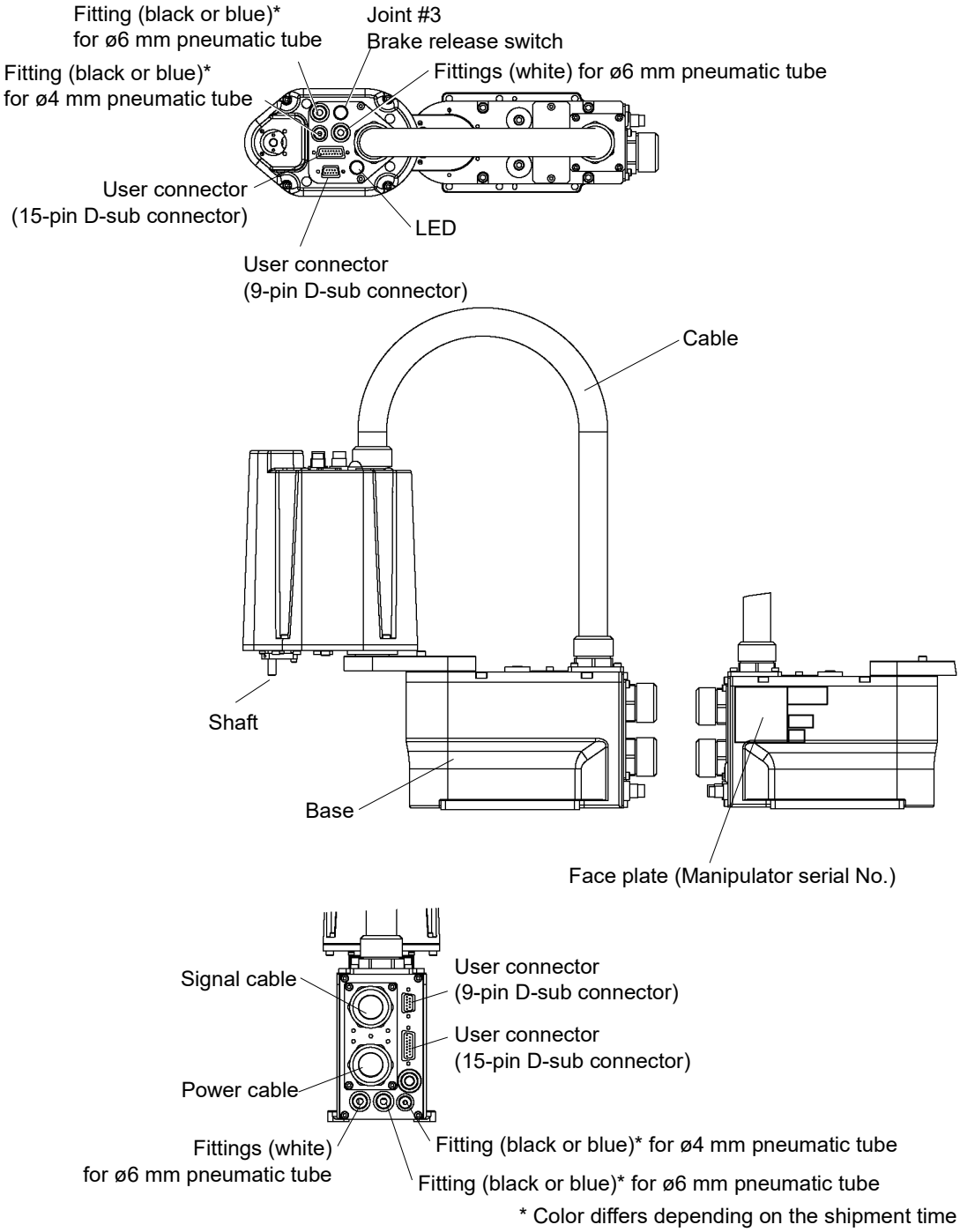

NOTE

- The brake release switch affects only Joint #3. When the brake release switch is pressed in emergency mode, the brake for Joint #3 is released simultaneously.

- When the LED lamp is lighting or the controller power is on, the current is being applied to the manipulator. Performing any work with the power ON is extremely hazardous and it may result in electric shock and/or improper function of the robot system. Make sure to turn OFF the controller power before the maintenance work.

Part Dimension : Standard-model (G1-***Z)

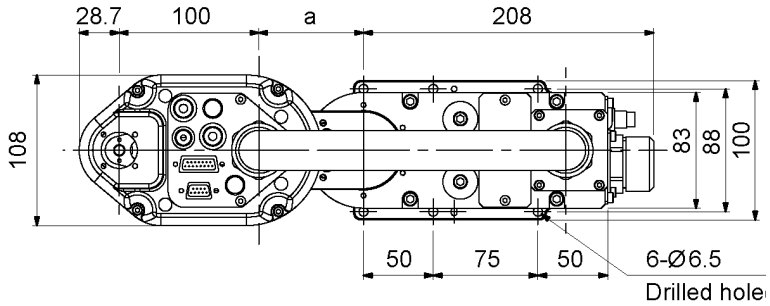

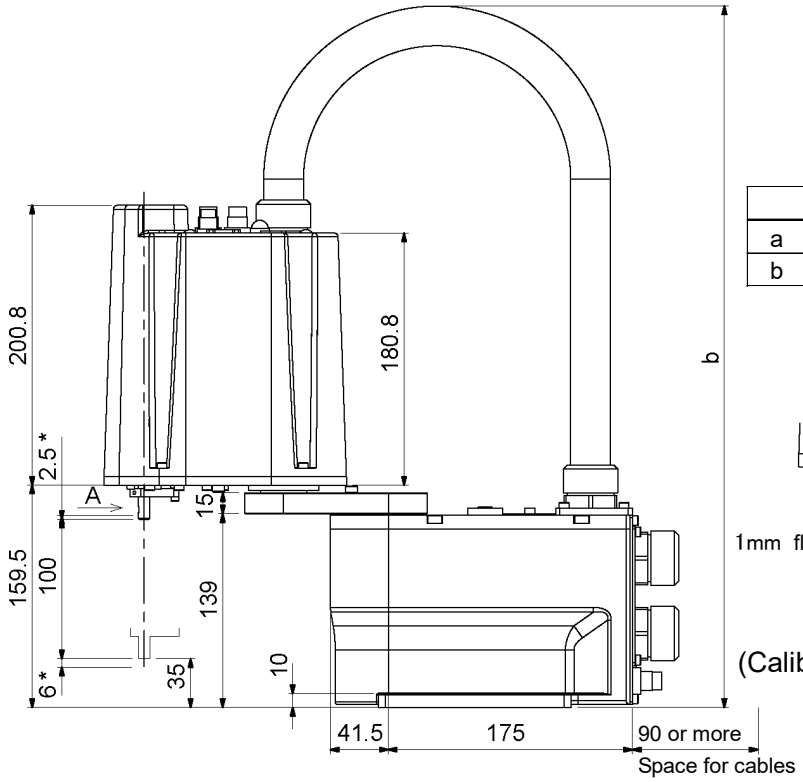

	G1-171Z	G1-221Z
a	75	125
b	Max.515	Max.545

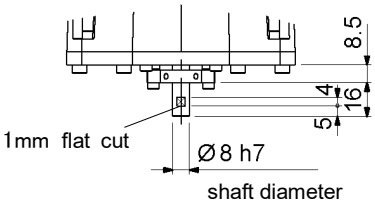

Detail of "A"
(Calibration point position of Joints #3 and #4)

(*) indicates the stroke margin by mechanical stop.

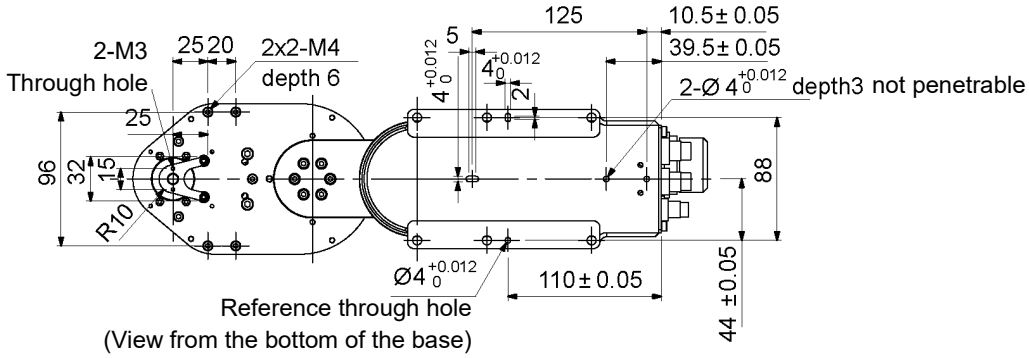

Part Names : Cleanroom-model (G1-***CZ)

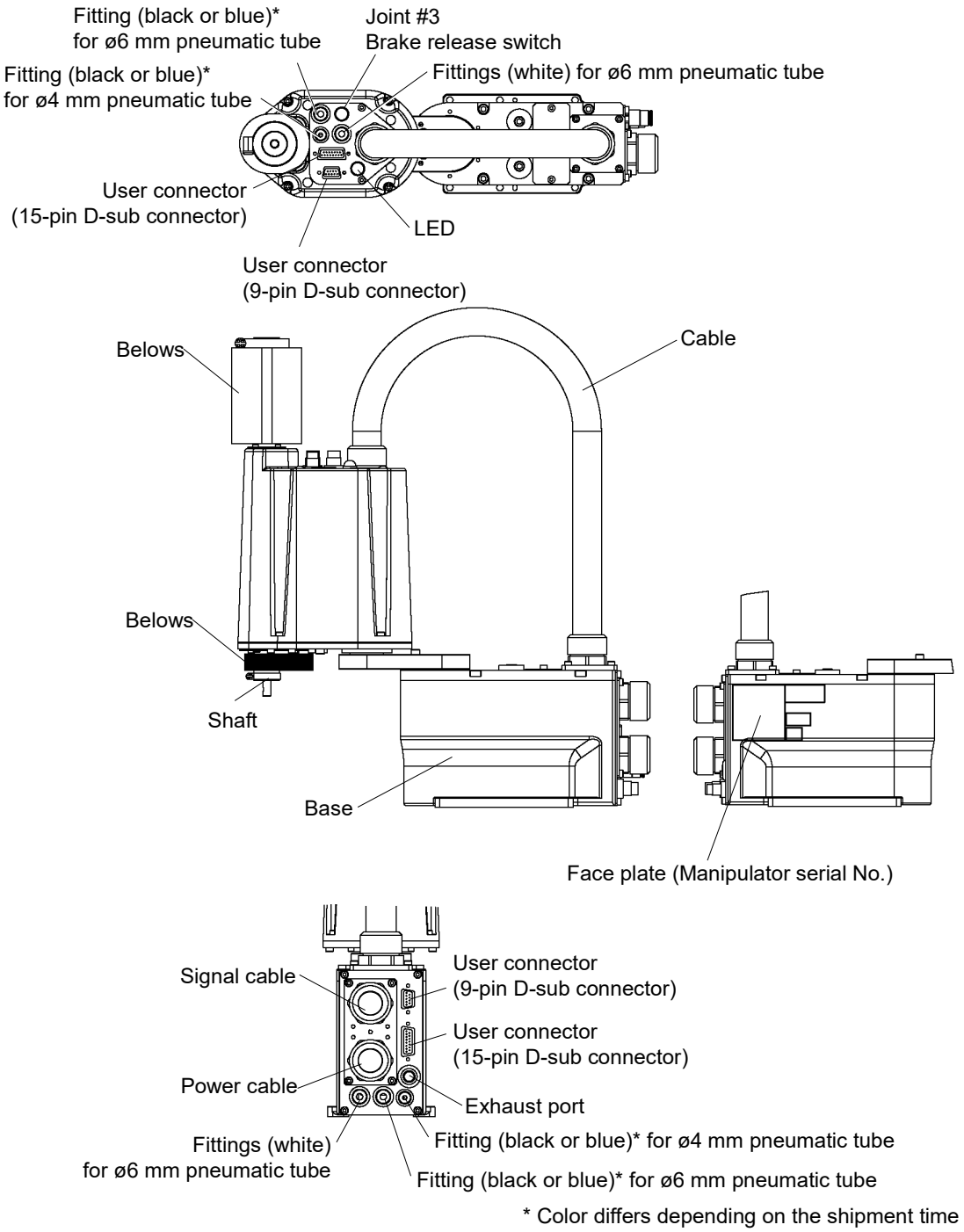

* Color differs depending on the shipment time

NOTE

- The brake release switch affects only Joint #3. When the brake release switch is pressed in emergency mode, the brake for Joint #3 is released simultaneously.

- When the LED lamp is lighting or the controller power is on, the current is being applied to the manipulator. Performing any work with the power ON is extremely hazardous and it may result in electric shock and/or improper function of the robot system. Make sure to turn OFF the controller power before the maintenance work.

Part Dimension : Cleanroom-model (G1-***CZ)

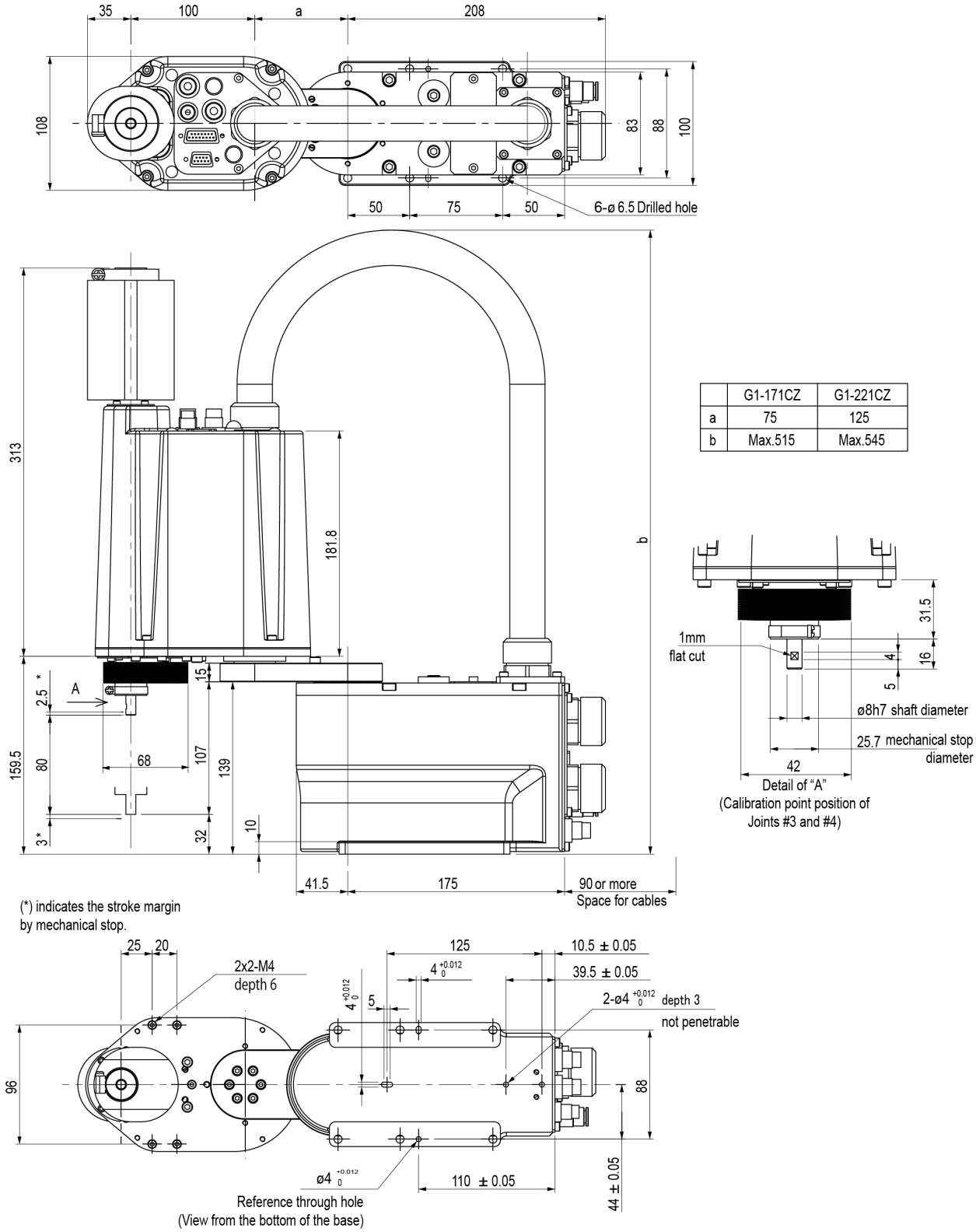

	G1-171CZ	G1-221CZ
a	75	125
b	Max.515	Max.545

2.3 Specifications

For details of each manipulator specifications, refer to *Appendix A: Specifications.*

2.4 How to Set the Model

The Manipulator model for your system has been set before shipment from the factory. It is normally not required to change the model when you receive your system.

CAUTION	■ When you need to change the setting of the Manipulator model, be sure to set the Manipulator model properly. Improper setting of the Manipulator model may result in abnormal or no operation of the Manipulator and/or cause safety problems.

NOTE

If the custom specifications number (MT***) is described on MODEL of the signature label (S/N label), the Manipulator has custom specifications. (A label with only the custom specifications number may be attached depending on shipment time.)

The custom specifications may require a different configuration procedure; check the custom specifications number (MT***) and contact the supplier of your region when necessary.

The Manipulator model can be set from software.
Refer to the chapter *Robot Configuration* in the *EPSON RC+ User's Guide*.

3. Environments and Installation

Designing and installation of the Manipulators and robotic equipment shall be performed by personnel who has taken robot system training held by us and suppliers and should conform to all national and local codes.

3.1 Environmental Conditions

A suitable environment is necessary for the robot system to function properly and safely. Be sure to install the robot system in an environment that meets the following conditions:

Item	Conditions
Ambient temperature *1	5 to 40°C
Ambient relative humidity	10 to 80% (no condensation)
First transient burst noise	1 kV or less (Signal wire)
Electrostatic noise	4 kV or less
Altitude	1000 m or lower
Environment	- Install indoors. - Keep away from direct sunlight. - Keep away from dust, oily smoke, salinity, metal powder or other contaminants - Keep away from flammable or corrosive solvents and gases - Keep away from water and oil. - Keep away from shocks or vibrations. - Keep away from sources of electric noise. - Keep away from explosive area - Keep away from a large quantity of radiation

NOTE

Manipulators are not suitable for operation in harsh environments such as painting areas, etc. When using Manipulators in inadequate environments that do not meet the above conditions, please contact the supplier of your region.

*1 The ambient temperature conditions are for the Manipulators only. For the Controller the Manipulators are connected to, refer to the Controller manual.

When the product is used in a low temperature environment around the minimum temperature of the product specification, or when the product is suspended for a long time on holidays or at night, a collision detection error may occur due to the large resistance of the drive unit immediately after the start of operation. In such a case, it is recommended to warm up for about 10 minutes.

Special Environmental Conditions

The surface of the Manipulator has general oil resistance. However, if your requirements specify that the Manipulator must withstand certain kinds of oil, please consult your distributor.

Rapid change in temperature and humidity can cause condensation inside the Manipulator.

If your requirements specify that the Manipulator handles food, please consult your distributor to check whether the Manipulator will damage the food or not.

The Manipulator cannot be used in corrosive environments where acid or alkaline is used.

In a salty environment where the rust is likely to gather, the Manipulator is susceptible to rust.

WARNING	■ Use an earth leakage breaker on the AC power cable of the Controller to avoid electric shock and circuit breakdown caused by short circuit. Prepare the earth leakage breaker that pertains the Controller you are using. For details, refer to the Controller manual.

CAUTION	■ When cleaning the Manipulator, do not rub it strongly with alcohol or benzene. It may lose luster on the coated face.

3.2 Base Table

A base table for anchoring the Manipulator is not supplied. Please make or obtain the base table for your Manipulator. The shape and size of the base table differs depending on the use of the robot system. For your reference, we list some Manipulator table requirements here.

The base table must not only be able to bear the weight of the Manipulator but also be able to withstand the dynamic movement of the Manipulator when the Manipulator operates at maximum acceleration/deceleration. Ensure that there is enough strength on the base table by attaching reinforcing materials such as crossbeams.

The torque and reaction force produced by the movement of the Manipulator are as follows:

Max. Reaction torque on the horizontal plate	: 100 Nm
Max. Horizontal reaction force	: 200 N
Max. Vertical reaction force	: 300 N

The threaded holes required for mounting the Manipulator base are M6. Use mounting bolts with specifications conforming to ISO898-1 property class: 10.9 or 12.9.

For dimensions, refer to *3.3 Mounting Dimensions*.

The plate for the Manipulator mounting face should be 15 mm thick or more and made of steel to reduce vibration. The surface roughness of the steel plate should be 25 μm or less.

The table must be secured on the floor or wall to prevent it from moving.

The Manipulator installation surface should have a flatness of 0.5 mm or less and an inclination of 0.5 ° or less. If the flatness of the installation surface is improper, the base may be damaged or the robot may not fully show its performance.

When using a leveler to adjust the height of the base table, use a screw with M8 diameter or more.

If you are passing cables through the holes on the base table, see the figures below.

[unit : mm]

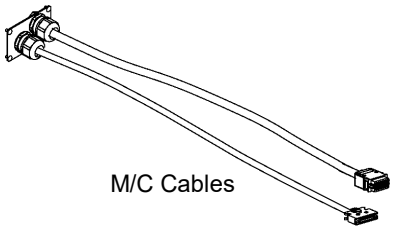

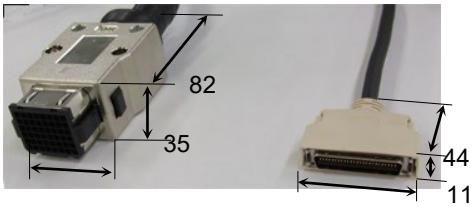

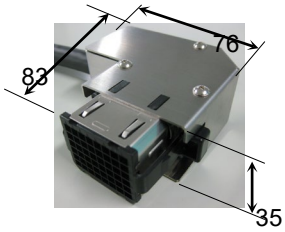

NOTE

Do not remove the M/C cables from the Manipulator.

For environmental conditions regarding space when placing the Controller on the base table, refer to the *Controller manual*.

WARNING	■ To ensure safety, a safeguard must be installed for the robot system. For details on the safeguard, refer to the *EPSON RC+ User's Guide*.

3.3 Mounting Dimensions

The maximum space described in figures shows that the radius of the end effector is 30 mm or less. If the radius of the end effector exceeds 30 mm, define the radius as the distance to the outer edge of maximum space.
If a camera or electromagnetic valve extends outside of the arm, set the maximum range including the space that they may reach.

g	Length of Arm #1 (mm)
h-g	Length of Arm #2 (mm)
m	Stroke of Joint #3 (mm)
f	Motion range
a	Motion range of Joint #1 (degree)
c	Motion range of Joint #2 (degree)
e	Mechanical stop area
b	Joint #1 angle to hit mechanical stop (degree)
d	Joint #2 angle to hit mechanical stop (degree)
n	Joint #3 range to hit lower mechanical stop (mm)
p	Joint #3 range to hit upper mechanical stop (mm)
j	Range from center of axis to back end (mm)
k	Range from center of axis to back end after moved to mechanical stop (mm)
q	Joint #2 motion range + angle to hit mechanical stop (degree)

Be sure to allow for the following extra spaces in addition to the space required for mounting the Manipulator, Controller, and peripheral equipment.

space for teaching

space for maintenance and inspection

(Ensure a space to open the rear side cover and the maintenance cover for maintenance.)

3.3.1 4-axis spec

Standard-model (G1-***S)

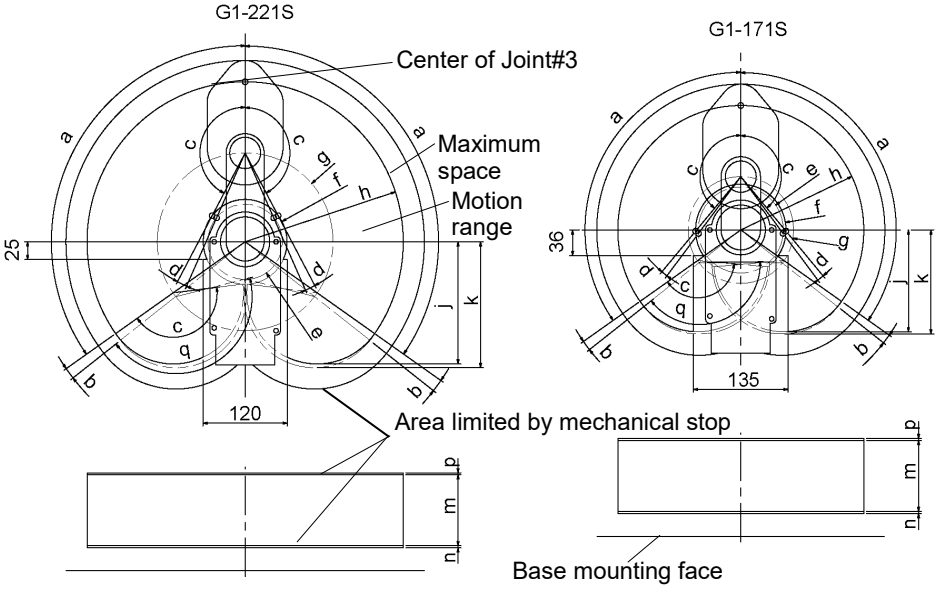

(unit: mm, ° = degree)

	a	b	c	d	e	f	g	h	j	k	m	n	p	q
G1-171S	125°	3°	140°	3°	60.4	64.3	75	175	143	146.1	100	6	2.5	143°
G1-221S			152°	4°	52.8	59.6	125	225	171.6	176.9				154°

Cleanroom-model (G1-***C)

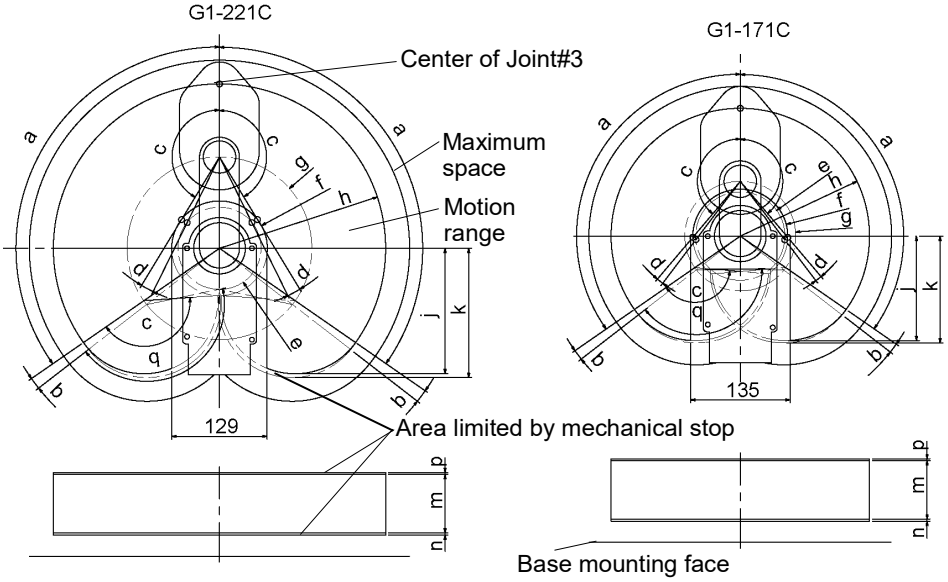

(unit: mm, ° = degree)

	a	b	c	d	e	f	g	h	j	k	m	n	p	q
G1-171C	125°	3°	140°	3°	62.6	64.3	75	175	143	146.1	80	3	2.5	143°
G1-221C			149°	5°	56.2	64.8	125	225	171.6	176.9				154°

3.3.2 3-axis spec

Standard-model (G1-***SZ)

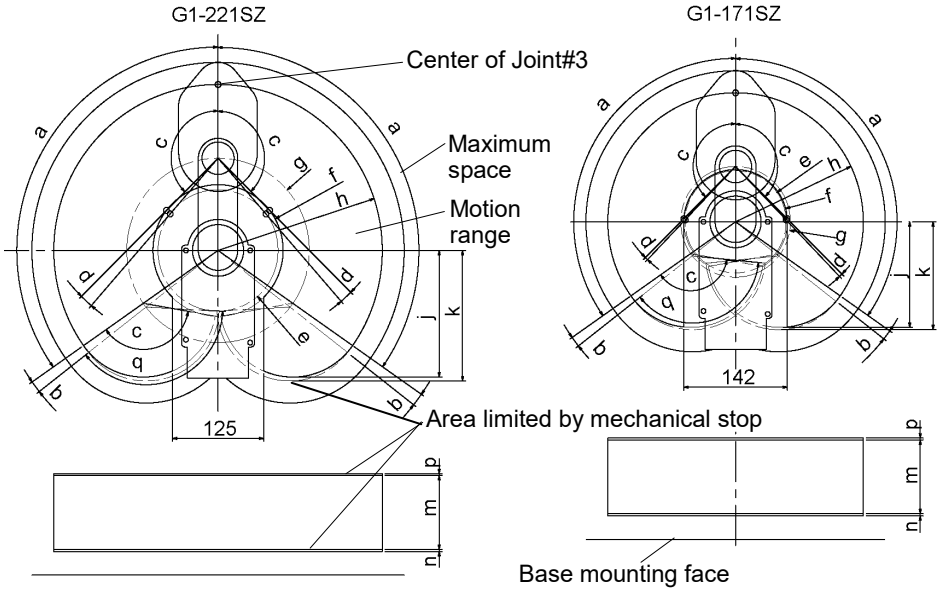

(unit: mm, ° = degree)

	a	b	c	d	e	f	g	h	j	k	m	n	p	q
G1-171SZ	125°	3°	135°	1.3°	69.2	70.9	75	175	143	146.1	100	6	2.5	136.3°
G1-221SZ				4°	82.2	89.2	125	225	171.6	176.9				139°

Cleanroom-model (G1-***CZ)

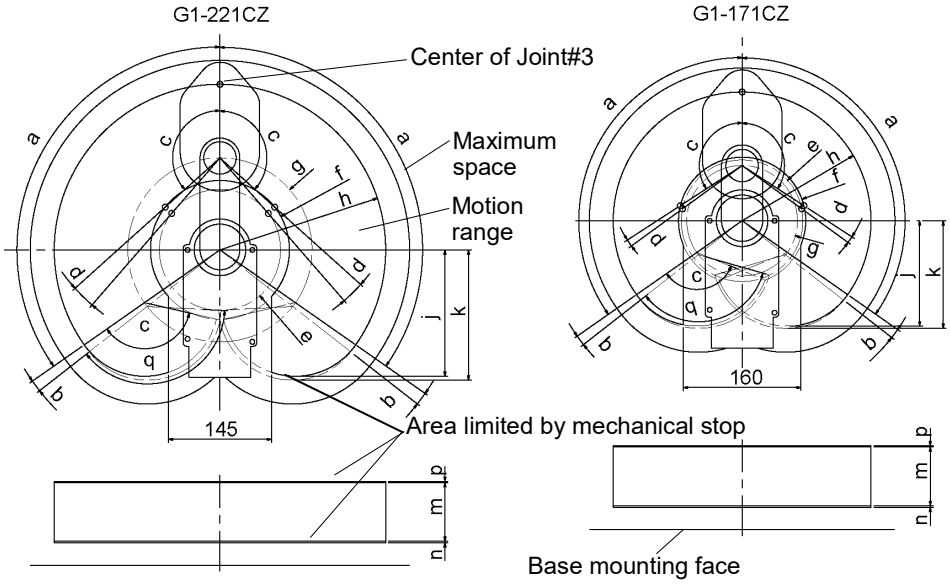

(uinit mm, ° = degree)

	a	b	c	d	e	f	g	h	j	k	m	n	p	q
G1-171CZ	125°	3°	123°	3°	82.5	86.4	75	175	143	146.1	80	3	2.5	126°
G1-221CZ			132°	7°	82.2	94.4	125	225	171.6	176.9				139°

3.4 Unpacking and Transportation

Transportation, and relocation shall be performed by personnel who has taken robot system training held by us and suppliers and should conform to all national and local codes.

WARNING	■ Only authorized personnel should perform sling work and operate a crane and a forklift. When these operations are performed by unauthorized personnel, it is extremely hazardous and may result in serious bodily injury and/or severe equipment damage to the robot system.

CAUTION	■ Using a cart or similar equipment, transport the Manipulator in the same manner as it was delivered. ■ To carry the Manipulator, secure the Manipulator to the delivery equipment or hold the areas indicated in gray in the figure (bottom of Arm #1 and bottom of the base) by hand. Never hold the duct to carry the Manipulator. There are the possibility such as the damage of cable and duct. 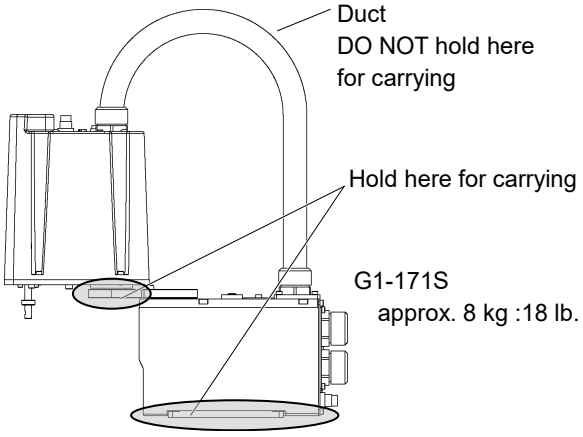 ■ Be careful not to get hands or fingers caught when holding the bottom of the base by hand. ■ Stabilize the Manipulator with your hands when hoisting it. ■ When transporting the Manipulator for a long distance, secure it to the delivery equipment directly so that the Manipulator never falls. If necessary, pack the Manipulator in the same style as it was delivered.

3.5 Installation

The installation shall be made by personnel who has taken robot system training held by us and suppliers and should conform to all national and local codes.

CAUTION	■ Be careful not to get hands, fingers, or feet caught and/or have equipment damaged by a fall of the Manipulator when installing or transporting it. Manipulator weight: approx. 8 kg: 18 lb. ■ The robot system must be installed to avoid interference with buildings, structures, utilities, other machines and equipment that may create a trapping hazard or pinch points. ■ Do not allow unnecessary strain on the arm. The unnecessary strain on the arm may result in damage to the bearing and/or the arm. Max. press force: 50N (Arm tip) ■ Vibration (resonance) may occur during operation depending on rigidity of the installation table. If the vibration occurs, improve rigidity of the table or change the speed or acceleration and deceleration settings.

NOTE

Secure the base to the base table.

bolt (4-M6×25) + spring washer + flat washer

Use bolts with specifications conforming to ISO898-1 Property Class: 6.9.

Tightening torque: 13 N·m (133 kgf·cm)

3.6 Connecting the Cables

WARNING	■ To shut off power to the robot system, disconnect the power plug from the power source. Be sure to connect the AC power cable to a power receptacle. DO NOT connect it directly to a factory power source. ■ Before performing any replacement procedure, turn OFF the Controller and related equipment, and then disconnect the power plug from the power source. Performing any replacement procedure with the power ON is extremely hazardous and may result in electric shock and/or malfunction of the robot system. ■ Be sure to connect the cables properly. Do not allow unnecessary strain on the cables. (Do not put heavy objects on the cables. Do not bend or pull the cables forcibly.) The unnecessary strain on the cables may result in damage to the cables, disconnection, and/or contact failure. Damaged cables, disconnection, or contact failure is extremely hazardous and may result in electric shock and/or improper function of the robot system. ■ Grounding the manipulator is done by connecting with the controller. Ensure that the controller is grounded and the cables are correctly connected. If the ground wire is improperly connected to ground, it may result in the fire or electric shock.

CAUTION	■ When connecting the Manipulator to the Controller, make sure that the serial numbers on each equipment match. Improper connection between the Manipulator and Controller may not only cause improper function of the robot system but also serious safety problems. The connection method varies with the Controller used. For details on the connection, refer to the *Controller manual*. If the G series Manipulator is connected to the Controller for the 6-axis robot, it may result in malfunction of the Manipulator.

3.7 User Wires and Pneumatic Tubes

CAUTION	■ Only authorized or certified personnel should be allowed to perform wiring. Wiring by unauthorized or uncertified personnel may result in bodily injury and/or malfunction of the robot system.

User electrical wires and pneumatic tubes are contained in the cable unit.

Electrical Wires

Rated Voltage	Allowable Current	Wires	Nominal Sectional Area	Outer Diameter	Note
AC/DC30 V	1 A	9+15	0.211 mm^2	ø8.3±0.3 mm	Twist pair

		Maker	Standard	
9 pin	Suitable Connector	JAE	DE-9PF-N	(Solder type)
	Clamp Hood	JAE	DE-C8-J9-F2-1R	(Connector setscrew: #4-40 NC)
15 pin	Suitable Connector	JAE	DA-15PF-N	(Solder type)
	Clamp Hood	JAE	DA-C8-J10-F2-1	(Connector setscrew: #4-40 NC)

Pins with the same number, indicated on the connectors on both ends of the cables, are connected.
Prepare D-sub connectors for wiring.

Pneumatic Tubes

Max. Usable Pneumatic Pressure	Pneumatic Tubes	Outer Diameter × Inner Diameter
0.59 MPa (6 kgf/cm^2 : 86 psi)	2	ø6 mm × ø4 mm
	1	ø4 mm × ø2.5 mm

Fittings for ø4 mm / ø6 mm (outer diameter) pneumatic tubes are supplied on both ends of the pneumatic tubes.

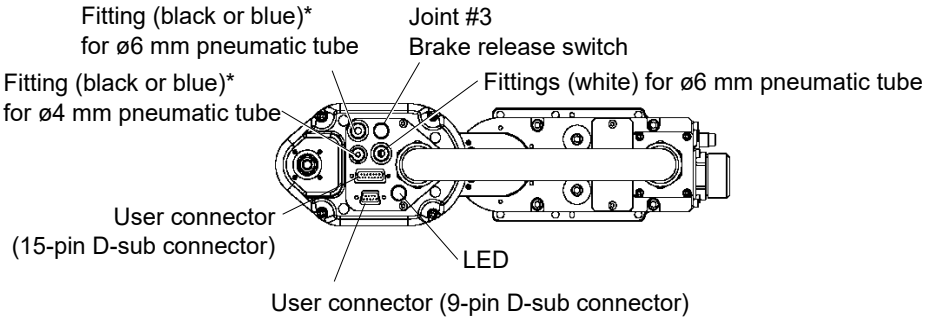

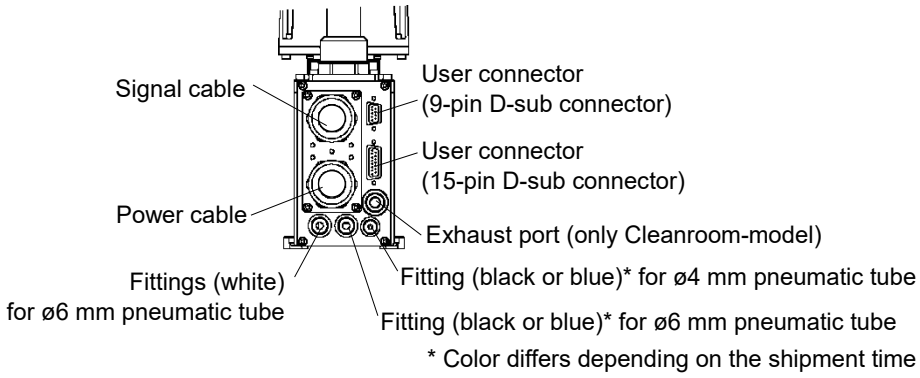

3.8 Relocation and Storage

The installation shall be made by personnel who has taken robot system training held by us and suppliers and should conform to all national and local codes.

WARNING	■ Only authorized personnel should perform sling work and operate a crane and a forklift. When these operations are performed by unauthorized personnel, it is extremely hazardous and may result in serious bodily injury and/or severe equipment damage to the robot system.

CAUTION	■ Before relocating the Manipulator, fold the arm and secure it tightly with a wire tie to prevent hands or fingers from being caught in the Manipulator. ■ When removing the anchor bolts, support the Manipulator to prevent falling. Removing the anchor bolts without support may result in a fall of the Manipulator, and then get hands, fingers, or feet caught. ■ To carry the Manipulator, secure the Manipulator to the delivery equipment or hold the bottom of Arm #1, the bottom of the main cable fitting, and the bottom of the base by hand. When holding the bottom of the base by hand, be very careful not to get hands or fingers caught. Do not hold the duct joint on the back of the base. ■ Stabilize the Manipulator with your hands when hoisting it. Unstable hoisting is extremely hazardous and may result in fall of the Manipulator.

When transporting the Manipulator for a long distance, secure it to the delivery equipment so that the Manipulator cannot fall.
If necessary, pack the Manipulator in the same way as it was delivered.

When the Manipulator is used for a robot system again after long-term storage, perform a test run to verify that it works properly, and then operate it thoroughly.

Transport and store the Manipulator in the range of Temperature: -20 to +60°C, Humidity: 10 to 90% (no condensation).

When condensation occurs on the Manipulator during transport or storage, turn ON the power only after the condensation dries.

Do not shock or shake the Manipulator during transport.

CAUTION	■ Be careful not to get hands, fingers, or feet caught and/or have equipment damaged by a fall of the Manipulator. Manipulator weight: approx. 8 kg: 18 lb.

(1) Turn OFF the power on all devices and unplug the cables.

(2) Hold the bottom of Arm #1 by hand to unscrew the anchor bolts.
Then, remove the Manipulator from the base table.

G1-171*

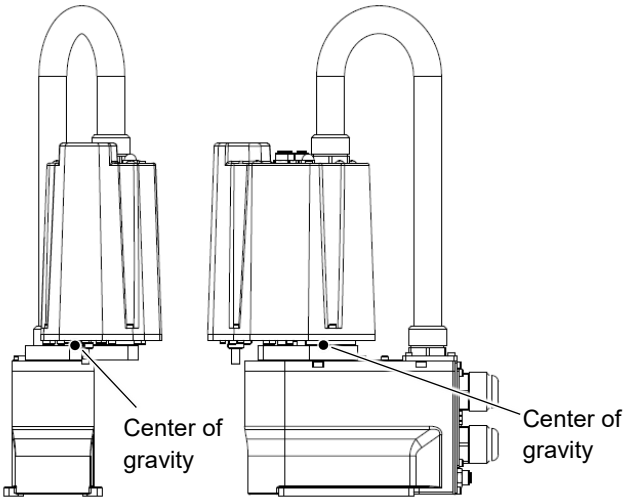

G1-221*

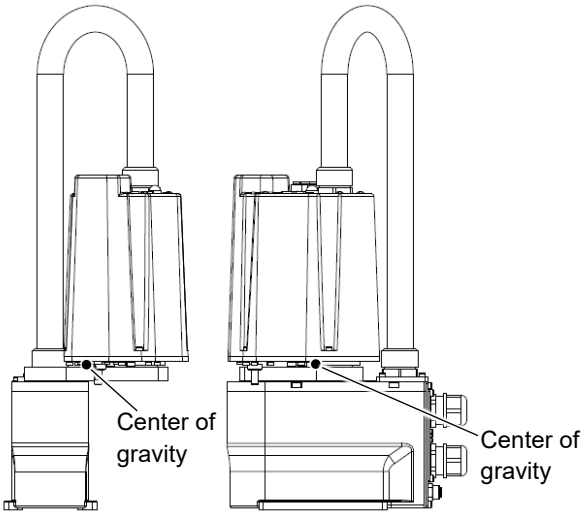

4. Setting of End Effectors

4.1 Attaching an End Effector

Users are responsible for making their own end effector(s). Before attaching an end effector, observe these guidelines. For details of attaching an end effector, *Hand Function Manual.*

⚠ CAUTION	■ If you use an end effector equipped with a gripper or chuck, connect wires and/or pneumatic tubes properly so that the gripper does not release the work piece when the power to the robot system is turned OFF. Improper connection of the wires and/or pneumatic tubes may damage the robot system and/or work piece as the work piece is released when the Emergency Stop switch is pressed. I/O outputs are configured at the factory so that they are automatically shut off (0) by power disconnection, the Emergency Stop switch, or the safety features of the robot system. However, the I/O set in the hand function does not turn off (0) when the Reset command is executed or in emergency stop.

Shaft

- Attach an end effector to the lower end of the shaft.
  For the shaft dimensions, and the overall dimensions of the Manipulator, refer to *2. Specifications*.
- Do not move the upper limit mechanical stop on the lower side of the shaft. Otherwise, when "Jump motion" is performed, the upper limit mechanical stop may hit the Manipulator, and the robot system may not function properly.
- Use a split muff coupling with an M4 bolt or larger to attach the end effector to the shaft.

Brake release switch

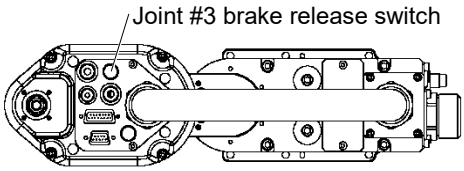

- Joint #3 cannot be moved up/down by hand because the electromagnetic brake is applied to the joint while power to the robot system is turned OFF. This prevents the shaft from hitting peripheral equipment in the case that the shaft is lowered by the weight of the end effector when the power is disconnected during operation, or when the motor is turned OFF even though the power is turned ON.
- To move Joint #3 up/down while attaching an end effector, turn ON the Controller and move the joint with the brake release switch pressed.
- This button switch is a momentary-type; the brake is released only while the button switch is being pressed.
- Be careful of the shaft while the brake release switch is being pressed because the shaft may be lowered by the weight of the end effector.

Layouts

- When you operate the manipulator with an end effector, the end effector may interfere with the Manipulator because of the outer diameter of the end effector, the size of the work piece, or the position of the arms. When designing your system layout, pay attention to the interference area of the end effector.

4.2 Weight and Inertia Settings

To ensure optimum Manipulator performance, it is important to make sure that the load (weight of the end effector and work piece) and moment of inertia of the load are within the maximum rating for the Manipulator, and that Joint #4 does not become eccentric.
If the load or moment of inertia exceeds the rating or if the load becomes eccentric, follow the steps below, "*4.2.1 Weight Setting*" and "*4.2.2 Inertia Setting*" to set parameters.
Setting parameters makes the PTP motion of the Manipulator optimal, reduces vibration to shorten the operating time, and improves the capacity for larger loads. In addition, it reduces persistent vibration produced when the moment of inertia of the end effector and work piece is larger than the default setting.

4.2.1 Weight Setting

CAUTION	■ The total weight of the end effector and the work piece must not exceed 1 kg (3-axis spec: 1.5 kg). The G1 series Manipulators (4-axis spec) are not designed to work with loads exceeding 1 kg (3-axis spec: 1.5 kg). Always set the Weight parameters according to the load. Setting a value that is smaller than the actual load may cause errors, excessive shock, insufficient function of the Manipulator, and/or shorten the life cycle of parts/mechanisms.

The acceptable weight capacity (end effector and work piece) in G1 series

	Default rating	Maximum
4-axis spec	0.5 kg	1 kg
3-axis spec	0.5 kg	1.5 kg

When the load (weight of the end effector and work piece) exceeds the rating, change the setting of Weight parameter.
After the setting is changed, the maximum acceleration/deceleration speed of the robot system at PTP motion corresponding to the "Weight Parameter" is set automatically.

Load on the Shaft

The load (weight of the end effector and work piece) on the shaft can be set by Weight parameter.

EPSON RC+

Enter a value into the [Load:] text box on the [Inertia] panel ([Tools]-[Robot Manager]).
(You may also execute the Inertia command from the [Command Window].)

Load on the Arm

When you attach a camera or other devices to the arm, calculate the weight as the equivalent of the shaft. Then, add this to the load and enter the total weight to the Weight parameter.

Equivalent Weight Formula

When you attach the equipment near Arm #2: $W_M = M\,(L_1)^2/(L_1+L_2)^2$

When you attach the equipment to the end of Arm #2: $W_M = M\,(L_M)^2/(L_2)^2$

- W_M : equivalent weight
- M : weight of air valves etc.
- L_1 : length of Arm #1
- L_2 : length of Arm #2
- L_M : distance from rotation center of Joint #2 to center of gravity of camera etc.

Automatic speed setting by Weight

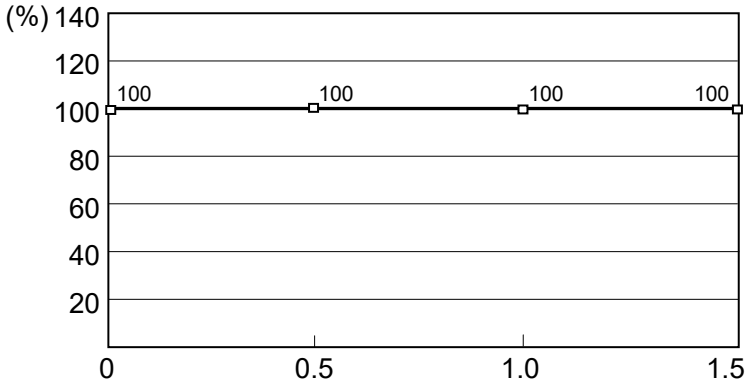

* The percentage in the graph is based on the speed at rated weight (0.5 kg) as 100%.

* 1.5 kg is only for 3-axis spec. 4-axis spec is up to 1.0 kg.

Automatic acceleration/deceleration setting by Weight

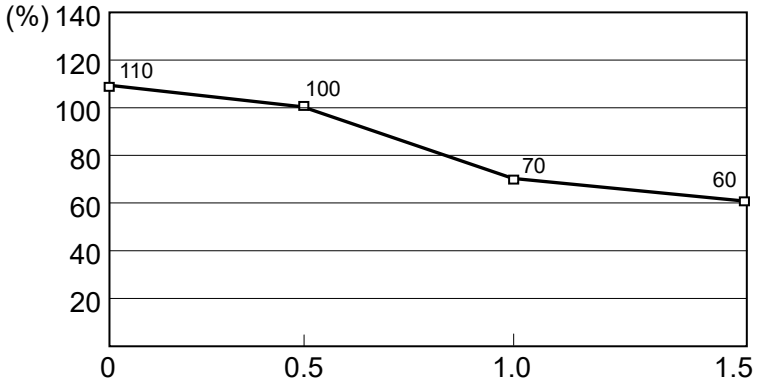

* The percentage in the graph is based on the acceleration / deceleration at rated weight (0.5 kg) as 100%.

* 1.5 kg is only for 3-axis spec. 4-axis spec is up to 1.0 kg.

4.2.2 Inertia Setting

Moment of Inertia and the Inertia Setting

The moment of inertia is defined as "the ratio of the torque applied to a rigid body and its resistance to motion". This value is typically referred to as "the moment of inertia", "inertia", or "GD^2". When the Manipulator operates with additional objects (such as an end effector) attached to the shaft, the moment of inertia of load must be considered.

CAUTION	■ The moment of inertia of the load (weight of the end effector and work piece) must be 0.004 kg·m^2 or less. The G1 series Manipulators (4-axis spec) are not designed to work with a moment of inertia exceeding 0.004 kg·m^2. Always set the moment of inertia parameter to the correct moment of inertia. Setting a value that is smaller than the actual moment of inertia may cause errors, excessive shock, insufficient function of the Manipulator, and/or shorten the life cycle of parts/mechanisms.

The acceptable moment of inertia of load for G1 series Manipulator (4-axis spec) is 0.0003 kg·m^2 at the default rating and 0.004 kg·m^2 at the maximum. When the moment of inertia of the load exceeds the rating, change the setting of the moment of inertia parameter of the Inertia command. After the setting is changed, the maximum acceleration/deceleration speed of Joint #4 at PTP motion corresponding to the "moment of inertia" value is set automatically.

Moment of inertia of load on the shaft

The moment of inertia of load (weight of the end effector and work piece) on the shaft can be set by the "moment of inertia" parameter of the Inertia command.

EPSON RC+

Enter a value into the [Load inertia:] text box on the [Inertia] panel ([Tools]-[Robot Manager]). (You may also execute the Inertia command from the [Command Window].)

Automatic acceleration/deceleration setting of Joint #4 by Inertia (moment of inertia)

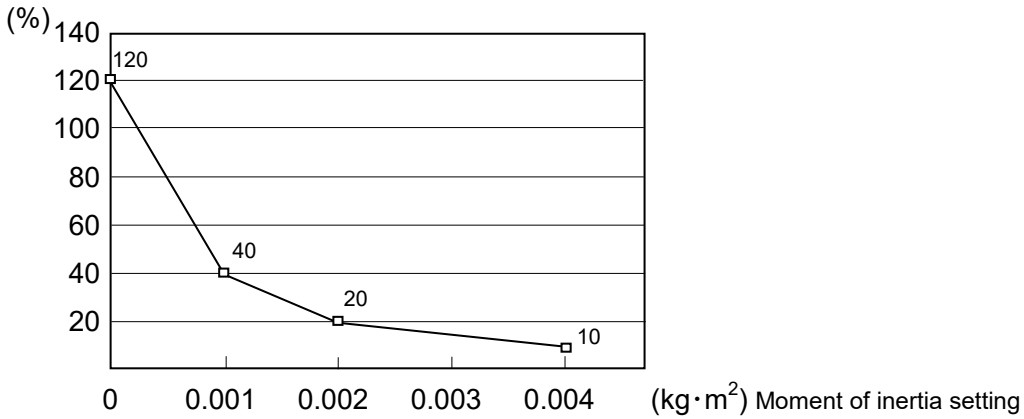

Eccentric Quantity and the Inertia Setting

CAUTION	■ The eccentric quantity of load (weight of the end effector and work piece) must be 50 mm or less. The G1 series Manipulators are not designed to work with eccentric quantity exceeding 50 mm. Always set the eccentric quantity parameter according to the eccentric quantity. Setting a value that is smaller than the actual eccentric quantity may cause errors, excessive shock, insufficient function of the Manipulator, and/or shorten the life cycle of parts/mechanisms.

The acceptable eccentric quantity of load in G1 series is 0 mm at the default rating and 50 mm at the maximum. When the eccentric quantity of load exceeds the rating, change the setting of eccentric quantity parameter of Inertia command. After the setting is changed, the maximum acceleration/deceleration speed of the Manipulator at PTP motion corresponding to the "eccentric quantity" is set automatically.

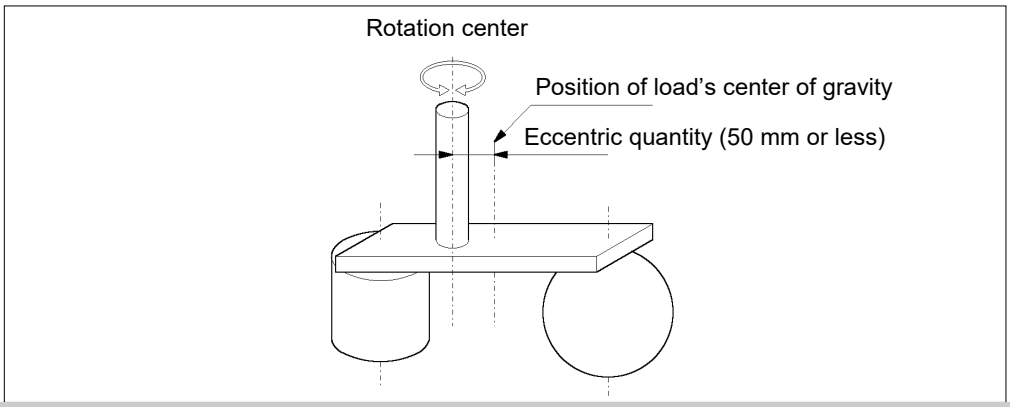

Eccentric quantity of load on the shaft

The eccentric quantity of load (weight of the end effector and work piece) on the shaft can be set by "eccentric quantity" parameter of Inertia command.

EPSON RC+

Enter a value into the [Eccentricity:] text box on the [Inertia] panel ([Tools]-[Robot Manager]). (You may also execute the Inertia command from the [Command Window].)

Automatic acceleration/deceleration setting by Inertia (eccentric quantity)

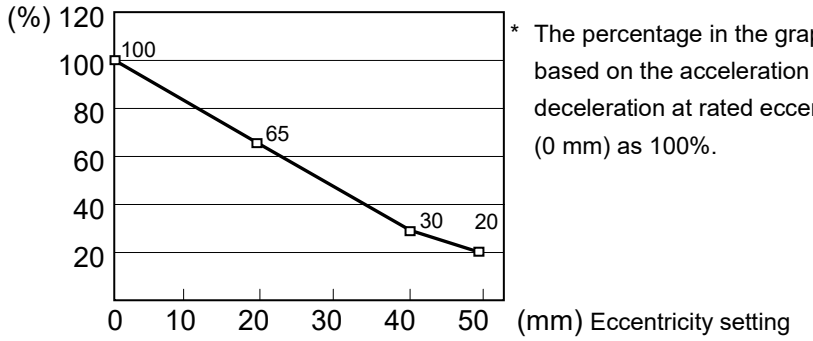

* The percentage in the graph is based on the acceleration / deceleration at rated eccentricity (0 mm) as 100%.

* Please contact the supplier of your region for over 50 mm.

Calculating the Moment of Inertia

Refer to the following examples of formulas to calculate the moment of inertia of load (end effector with work piece).

The moment of inertia of the entire load is calculated by the sum of each part (a), (b), and (c).

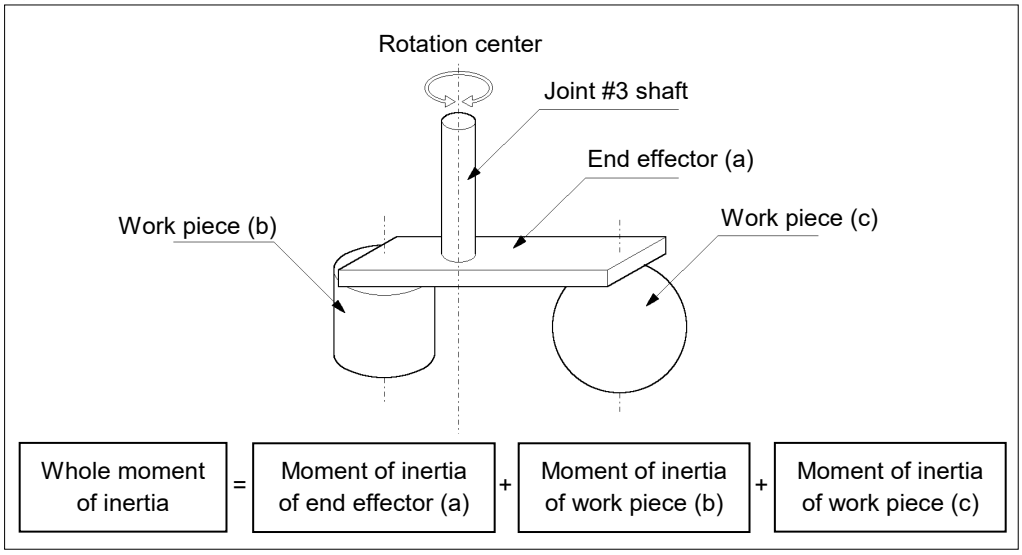

The methods for calculating the moment of inertia for (a), (b), and (c) are shown below. Calculate the total moment of inertia using the basic formulas.

(a) Moment of inertia of a rectangular parallelepiped

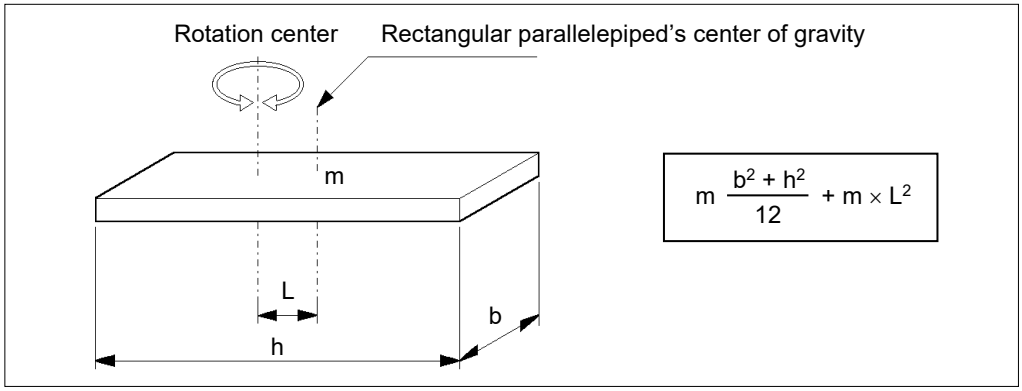

(b) Moment of inertia of a cylinder

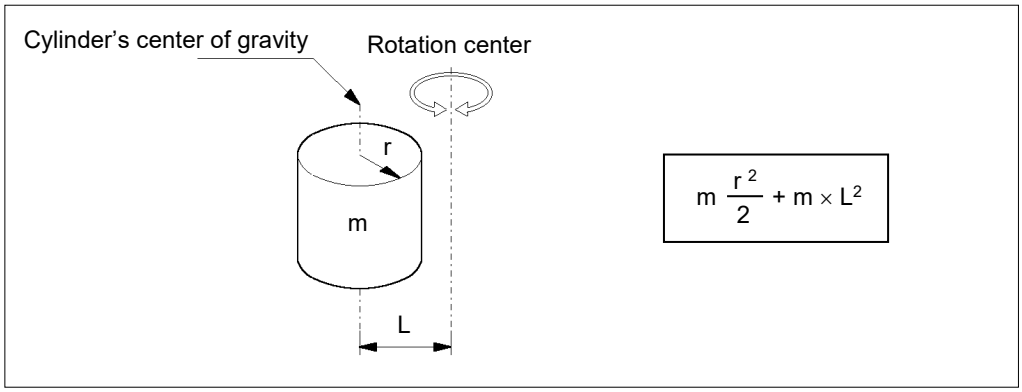

(c) Moment of inertia of a sphere

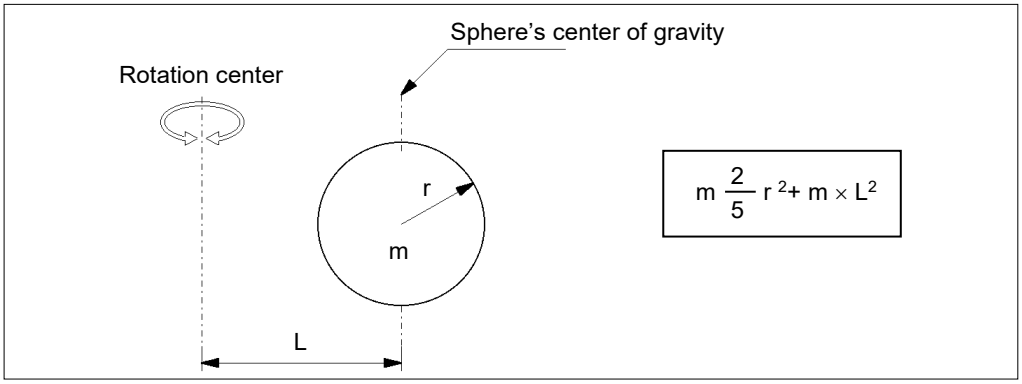

4.3 Precautions for Auto Acceleration/Deceleration of Joint #3

When you move the Manipulator in horizontal PTP motion with Joint #3 (Z) at a high position, the motion time will be faster.

When Joint #3 gets below a certain point, then auto acceleration/deceleration is used to reduce acceleration/deceleration. (Refer to the figure below.) The higher the position of the shaft is, the faster the motion acceleration/deceleration is. However, it takes more time to move Joint #3 up and down. Adjust the position of Joint #3 for the Manipulator motion after considering the relation between the current position and the destination position.

The upper limit of Joint #3 during horizontal motion using Jump command can be set by the LimZ command.

Automatic acceleration/deceleration vs. Joint #3 position

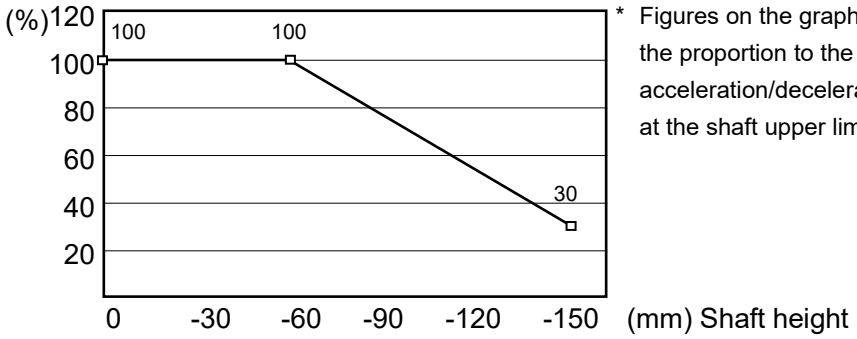

* Figures on the graph (%) are the proportion to the acceleration/deceleration speed at the shaft upper limit position.

NOTE

When moving the Manipulator horizontally while the shaft is being lowered, it may cause over-shoot at the time of final positioning.

5. Motion Range

CAUTION	■ When setting up the motion range for safety, both the pulse range and mechanical stops must always be set at the same time.

The motion range is preset at the factory as explained in *5.4 Standard Motion Range*. That is the maximum motion range of the Manipulator.

There are three methods for setting the motion range described as follows:

1. Setting by pulse range (for all joints)
2. Setting by mechanical stops (fix or change is not available)
3. Setting the Cartesian (rectangular) range in the X, Y coordinate system of the Manipulator (for Joints #1 and #2)

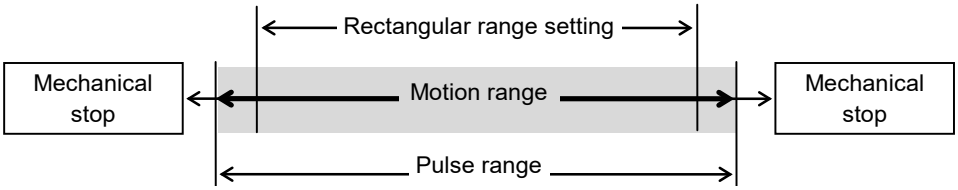

When the motion range is changed due to layout efficiency or safety, follow the descriptions in *5.1* to *5.3* to set the range.

5.1 Motion Range Setting by Pulse Range (for All Joints)

Pulses are the basic unit of Manipulator motion. The motion range of the Manipulator is controlled by the pulse range between the pulse lower limit and upper limit of each joint. Pulse values are read from the encoder output of the servo motor.

For the maximum pulse range, refer to the following sections.
The pulse range must be set inside of the mechanical stop range.

5.1.1 Max. Pulse Range of Joint #1
5.1.2 Max. Pulse Range of Joint #2
5.1.3 Max. Pulse Range of Joint #3
5.1.4 Max. Pulse Range of Joint #4.

NOTE

Once the Manipulator receives an operating command, it checks whether the target position specified by the command is within the pulse range before operating. If the target position is out of the set pulse range, an error occurs and the Manipulator does not move.

EPSON RC+

The pulse range can be set on the [Range] panel shown by selecting [Tools]-[Robot Manager]. (You may also execute the Range command from the [Command Window].)

5.1.1 Max. Pulse Range of Joint #1

The 0 (zero) pulse position of Joint #1 is the position where Arm #1 faces toward the positive (+) direction on the X-coordinate axis.
When the 0 pulse is a starting point, the counterclockwise pulse value is defined as the positive (+) and the clockwise pulse value is defined as the negative (−).

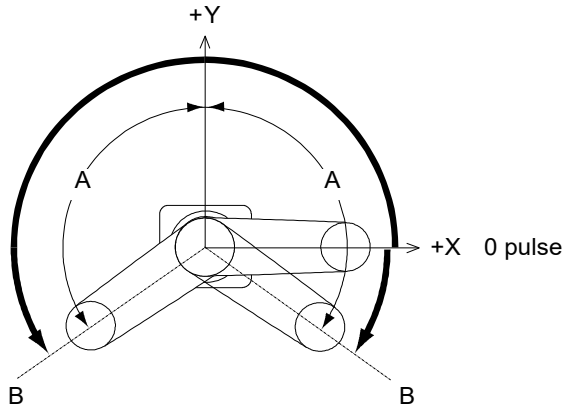

	All models
A Max. Motion Range	± 125 deg.
B Max. Pulse Range	− 1019449 ~ + 6262329

5.1.2 Max. Pulse Range of Joint #2

The 0 (zero) pulse position of Joint #2 is the position where Arm #2 is in-line with Arm #1.
With the 0 pulse as a starting point, the counterclockwise pulse value is defined as the positive (+) and the clockwise pulse value is defined as the negative (−).

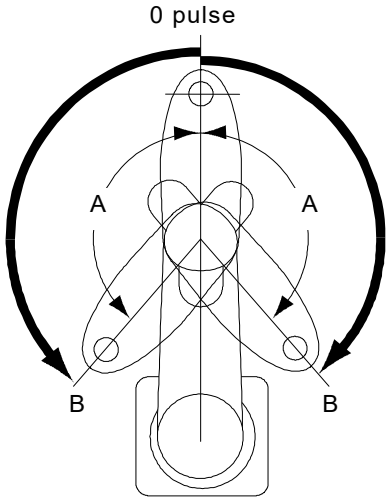

4-axis spec	G1-171S	G1-171C	G1-221S	G1-221C
A Max. Motion Range	± 140 deg.		± 152 deg.	± 149 deg.
B Max. Pulse Range	± 2548623		± 2767076	± 2712463

3-axis spec	G1-171SZ	G1-171CZ	G1-171CZ	G1-221CZ
A Max. Motion Range	± 135 deg.	± 123 deg.	± 135 deg.	± 132 deg.
B Max. Pulse Range	± 2457600	± 2239147	± 2457600	± 2402987

5.1.3 Max. Pulse Range of Joint #3

The 0 (zero) pulse position of Joint #3 is the position where the shaft is at its upper limit. The pulse value is always negative because Joint #3 always moves lower than the 0 pulse position.

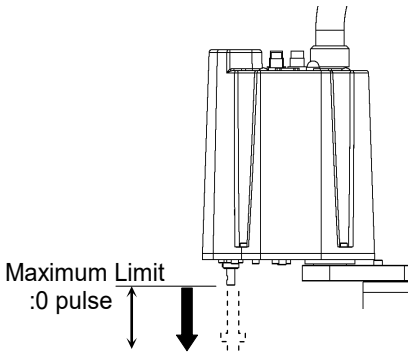

Type		Joint #3 Stroke	Minimum Limit
Standard-model	G1-**1S	100 mm	– 1092267
Cleanroom-model	G1-**1C	80 mm	– 873813

5.1.4 Max. Pulse Range of Joint #4

The 0 (zero) pulse position of Joint #4 is the position where the flat near the end of the shaft faces toward the end of Arm #2. With the 0 pulse as a starting point, the counterclockwise pulse value is defined as the positive (+) and the clockwise pulse value is defined as the negative (−).

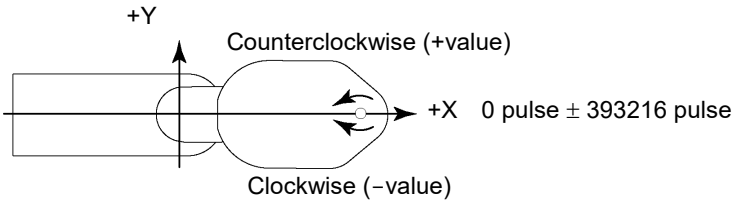

5.2 Motion Range Setting by Mechanical Stops

Mechanical stops physically limit the absolute area that the Manipulator can move.

Both Joints #1 and #2 have threaded holes in the positions corresponding to the angle for the mechanical stop settings. Install the bolts in the holes corresponding to the angle that you want to set.

Joints #3 can be set to any length less than the maximum stroke.

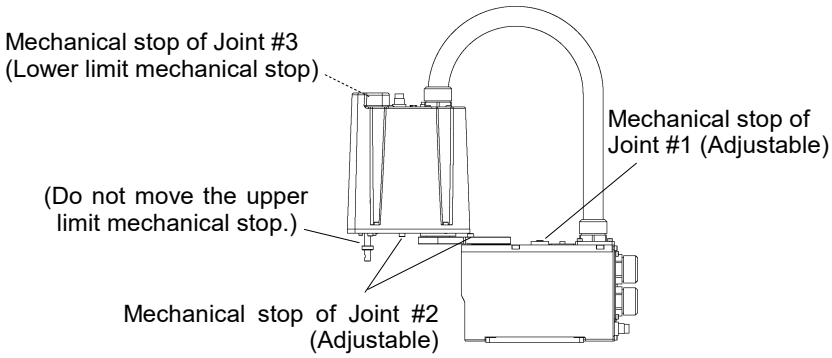

5.2.1 Setting the Mechanical Stops of Joints #1 and #2

Both Joints #1 and #2 have threaded holes in the positions corresponding to the angle for the mechanical stop settings. Install the bolts in the holes corresponding to the angle that you want to set.

Joint #1

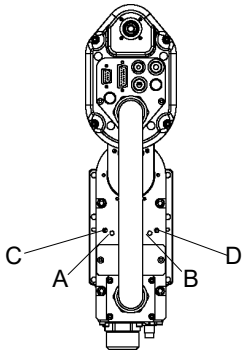

(° = degree)

Model	A	B	C	D
All	+125°	−125°	+120°	−120°

Joint #2

G1-171*

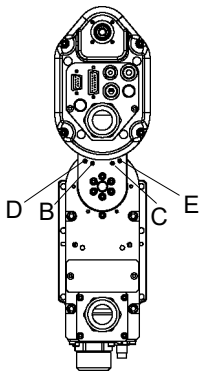

G1-171CZ

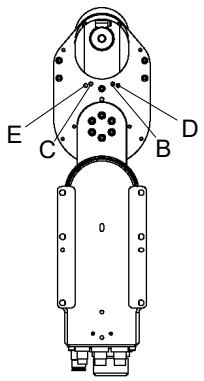

G1-221*

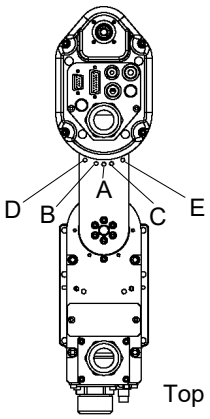

(° = degree)

Model		A	B *1	C *1	D	E
4-axis spec	G1-171S	-	+140°	−140°	+130°	−130°
	G1-171C	-	+140°	−140°	+130°	−130°
	G1-221S	±152	+140°	−140°	+125°	−125°
	G1-221C	±149	+140°	−140°	+125°	−125°
3-axis spec	G1-171SZ	-	+135°	−135°	+125°	−125°
	G1-171CZ *2	-	+123°	−123°	+115°	−115°
	G1-221SZ	-	+135°	−135°	+120°	−120°
	G1-221CZ	-	+132°	−132°	+120°	−120°

*1 Standard position of the mechanical stop

*2 Limits the motion range using the bolts in the Arm #2 bottom to prevent the bellows from contacting the manipulator body.

(1) Turn OFF the Controller.

(2) Install a hexagon socket head cap bolt into the hole corresponding to the setting angle, and tighten it.

Joint	Hexagon socket head cap bolt (fully threaded)	The number of bolts	Recommended tightening torque	Strength
1	M6×10	2	17.6 N·m (180 kgf·cm)	ISO898-1 property class: 10.9 or 12.9.
2	M5×10	2	9.8 N·m (100 kgf·cm)	

(3) Turn ON the Controller.

(4) Set the pulse range corresponding to the new positions of the mechanical stops.

Be sure to set the pulse range inside the positions of the mechanical stop range.

NOTE

Example: Using G1-171S*

The angle of Joint #1 is set from −120 degrees to +120 degrees.

The angle of Joint #2 is set from –130 degrees to +130 degrees.

EPSON RC+

Execute the following commands from the [Command Window].

```
>JRANGE 1,-873814,6116694      ' Sets the pulse range of Joint #1
>JRANGE 2,-2366578,2366578     ' Sets the pulse range of Joint #2
>RANGE                         ' Checks the setting using Range
 -873814, 6116694,-2366578,2366578, -1092267
    ,0, -393216, 393216
```

(5) Move the arm by hand until it touches the mechanical stops, and make sure that the arm does not hit any peripheral equipment during operation.

(6) Operate the joint changed at low speeds until it reaches the positions of the minimum and maximum pulse range. Make sure that the arm does not hit the mechanical stops. (Check the position of the mechanical stop and the motion range you set.)

Example: Using G1-171S*

The angle of Joint #1 is set from –120 degrees to +120 degrees.

The angle of Joint #2 is set from –130 degrees to +130 degrees.

EPSON RC+

Execute the following commands from the [Command Window].

```
>MOTOR ON                      ' Turns ON the motor
>POWER LOW                     ' Enters low-power mode
>SPEED 5                       ' Sets at low speeds
>PULSE -873814,0,0,0           ' Moves to the min. pulse position of Joint #1
>PULSE 6116694,0,0,0           ' Moves to the max. pulse position of Joint #1
>PULSE 2621440,-2366578,0,0    ' Moves to the min. pulse position of Joint #2
>PULSE 2621440,2366578,0,0     ' Moves to the max. pulse position of Joint #2
```

The Pulse command (Go Pulse command) moves all joints to the specified positions at the same time. Specify safe positions after considering motion of not only the joints whose pulse range have been changed, but also other joints.

In this example, Joint #1 is moved to the center of its motion range (pulse value: 2621440) when checking Joint #2.

If the arm is hitting the mechanical stops or if an error occurs after the arm hits the mechanical stops, either reset the pulse range to a narrower setting or extend the positions of the mechanical stops within the limit.

5.2.2 Setting the Mechanical Stop of Joint #3

NOTE

Setting the Mechanical Stop of Joint #3 shall be performed by personnel who has taken a proper training. For details, refer to the G series Manipulator Maintenance Manual.

5.3 Setting the Cartesian (Rectangular) Range in the XY Coordinate System of the Manipulator (for Joints #1 and #2)

Use this method to set the upper and lower limits of the X and Y coordinates.

This setting is only enforced by software. Therefore, it does not change the physical range. The maximum physical range is based on the position of the mechanical stops.

EPSON RC+

Set the XYLim setting on the [XYZ Limits] panel shown by selecting [Tools]-[Robot Manager].
(You may also execute the XYLim command from the [Command Window].)

5.4 Standard Motion Range

The following “motion range” diagrams show the standard (maximum) specification. When each Joint motor is under servo control, the center of Joint #3’s (shaft’s) lowest point moves in the areas shown in the figure.

“Area limited by mechanical stop” is the area where the center of Joint #3’s lowest point can be moved when each joint motor is not under servo control.

“Mechanical stop” sets the limited motion range so that the center of Joint #3 cannot move beyond the area mechanically.

“Maximum space” is the area that contains the farthest reach of the arms. If the maximum radius of the end effector is over 60 mm, add the “Area limited by mechanical stop” and “radius of the end effector”. The total value is specified as the maximum area.

For the motion area figures, refer to *3.3 Mounting Dimensions*.

G3 Manipulator

This volume contains information for setup and operation of the Manipulators.
Please read this volume thoroughly before setting up and operating the Manipulators.

1. Safety

Unpacking and transportation of the Manipulators and robotic equipment shall be performed by personnel who has taken robot system training held by us and suppliers and should conform to all national and local codes.

Please read this manual and other related manuals before installing the robot system or before connecting cables.

Keep this manual handy for easy access at all times.

1.1 Conventions

Important safety considerations are indicated throughout the manual by the following symbols. Be sure to read the descriptions shown with each symbol.

WARNING	This symbol indicates that a danger of possible serious injury caused by electric shock exists if the associated instructions are not followed properly.
WARNING	This symbol indicates that a danger of possible serious injury or death caused by electric shock exists if the associated instructions are not followed properly.
CAUTION	This symbol indicates that a danger of possible harm to people or physical damage to equipment and facilities exists if the associated instructions are not followed properly.

1.2 Design and Installation Safety

This product is intended for transporting and assembling parts in a safely isolated area.
Design and installation of robot system shall be performed by personnel who has taken robot system training held by us and suppliers.
To ensure safety, a safeguard must be installed for the robot system. For details on the safeguard, refer to the *Installation and Design Precautions* in the *Safety* chapter of the *EPSON RC+ User's Guide*.

The following items are safety precautions for design personnel:

WARNING	■ Personnel who design and/or construct the robot system with this product must read *Safety Manual to* understand the safety requirements before designing and/or constructing the robot system. Designing and/or constructing the robot system without understanding the safety requirements is extremely hazardous, may result in serious bodily injury and/or severe equipment damage to the robot system, and may cause serious safety problems. ■ The Manipulator and the Controller must be used within the environmental conditions described in their respective manuals. This product has been designed and manufactured strictly for use in a normal indoor environment. Using the product in an environment that exceeds the specified environmental conditions may not only shorten the life cycle of the product but may also cause serious safety problems. ■ The robot system must be used within the installation requirements described in the manuals. Using the robot system outside of the installation requirements may not only shorten the life cycle of the product but also cause serious safety problems. ■ When designing or installing a robot system, wear at least the following protective gear. Working without protective gear may cause serious safety problems. Work clothes suitable for work Helmet Safety shoes

Further precautions for installation are mentioned in the chapter *3. Environments and Installation.* Please read this chapter carefully to understand safe installation procedures before installing the robots and robotic equipment.

1.2.1 Strength of the Ball Screw Spline

If a load exceeding the allowable value is applied to the ball screw spline, it may not work properly due to deformation or breakage of the shaft. If the ball screw spline is applied the load exceeding the allowable value, it is necessary to replace the ball screw spline unit.
The allowable loads differ depending on distance where the load is applied to. For calculating the allowable load, see the calculation formula below.

[Allowable bending moment]

G3: $M=13{,}000\ N{\cdot}mm$

Example: If 130 N load is applied
at 100 mm from
the end of the spline nut

[Moment]

$M=F{\cdot}L=100{\cdot}130=13{,}000\ N{\cdot}mm$

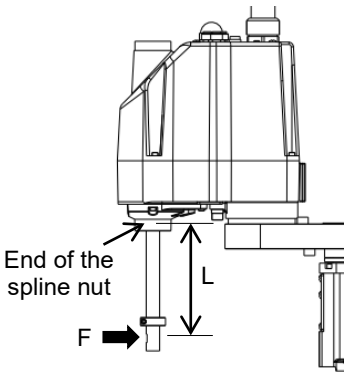

1.3 Operation Safety

The following items are safety precautions for qualified Operator personnel:

WARNING	■ Please carefully read *Safety Manual* before operating the robot system. Operating the robot system without understanding the safety precautions is extremely hazardous and may result in serious bodily injury and/or severe equipment damage to the robot system. ■ Do not enter the operating area of the Manipulator while the power to the robot system is turned ON. Entering the operating area with the power ON is extremely hazardous and may cause serious safety problems as the Manipulator may move even if it seems to be stopped. ■ Before operating the robot system, make sure that no one is inside the safeguarded area. The robot system can be operated in the mode for teaching even when someone is inside the safeguarded area. The motion of the Manipulator is always in restricted (low speeds and low power) status to secure the safety of an operator. However, operating the robot system while someone is inside the safeguarded area is extremely hazardous and may result in serious safety problems in case that the Manipulator moves unexpectedly. ■ Immediately press the Emergency Stop switch whenever the Manipulator moves abnormally while the robot system is operated.

WARNING	■ To shut off power to the robot system, disconnect the power plug from the power source. Be sure to connect the AC power cable to a power receptacle. DO NOT connect it directly to a factory power source. ■ Before performing any replacement procedure, turn OFF the Controller and related equipment, and then disconnect the power plug from the power source. Performing any replacement procedure with the power ON is extremely hazardous and may result in electric shock and/or malfunction of the robot system. ■ Do not connect or disconnect the motor connectors while the power to the robot system is turned ON. Connecting or disconnecting the motor connectors with the power ON is extremely hazardous and may result in serious bodily injury as the Manipulator may move abnormally, and also may result in electric shock and/or malfunction of the robot system.

CAUTION	■ Whenever possible, only one person should operate the robot system. If it is necessary to operate the robot system with more than one person, ensure that all people involved communicate with each other as to what they are doing and take all necessary safety precautions. ■ Joint #1, #2, and #4: If the joints are operated repeatedly with the operating angle less than 5 degrees, they may get damaged early because the bearings are likely to cause oil film shortage in such situation. To prevent early breakdown, move each joint larger than 50 degrees for about once an hour. Joint #3: If the up-and-down motion of the hand is less than 10 mm, move the joint a half of the maximum stroke for about once an hour. ■ Oscillation (resonance) may occur continuously in low speed Manipulator motion (Speed: approx. 5 to 20%) depending on combination of Arm orientation and end effector load. Oscillation arises from natural oscillation frequency of the Arm and can be controlled by following measures. Changing Manipulator speed Changing the teach points Changing the end effector load

1.4 Emergency Stop

If the Manipulator moves abnormally during operation, immediately press the Emergency Stop switch. Pressing the Emergency Stop switch immediately changes the manipulator to deceleration motion and stops it at the maximum deceleration speed.

Avoid pressing the Emergency Stop switch unnecessarily while the Manipulator is running normally.

- The Manipulator may hit the peripheral equipment.
  When you press the Emergency Stop switch, the operating trajectory until the robot system stops is different from that in normal operation.
- The life of the brakes will be shortened.
  The brakes are locked and the brake friction plate is worn.
  Normal brake life cycle: About 2 years (when the brakes are used 100 times/day)
  However, the rough normal relay life is approximately 20,000 times. If you press the emergency stop switch unnecessarily, the life of the relay will be shortened.
- Impact is applied on the reduction gear unit, and it may result in the short life of the reduction gear unit.

To place the system in emergency mode during normal operation, press the Emergency Stop switch when the Manipulator is not moving.
Refer to the Controller manual for instructions on how to wire the Emergency Stop switch circuit.
Do not turn OFF the Controller while the Manipulator is operating.
If you attempt to stop the Manipulator in emergency situations, make sure to stop the Manipulator using the E-STOP of the Controller.

If the Manipulator is stopped by turning OFF the Controller while it is operating, following problems may occur.

Reduction of the life and damage of the reduction gear unit
Position gap at the joints

In addition, if the Controller was forced to be turned OFF by blackouts and the like while the Manipulator is operating, make sure to check the following points after power restoration.

Whether or not the reduction gear is damaged
Whether or not the joints are in their proper positions

If there is a position gap, perform calibration by referring to the *G series Maintenance Manual – G3 Manipulator - 14. Calibration* in the manual.

Before using the Emergency Stop switch, be aware of the followings.

- The Emergency Stop (E-STOP) switch should be used to stop the Manipulator only in case of emergencies.
- To stop the Manipulator operating the program except in emergency, use Pause (halt) or STOP (program stop) commands
  Pause and STOP commands do not turn OFF the motors. Therefore, the brake does not function.
- For the Safeguard system, do not use the circuit for E-STOP.

To check brake problems, refer to the *Inspection Point.*

NOTE

Test pulse cannot be used with the emergency stop input of this model.

Stopping distance in emergency

The operating Manipulator cannot stop immediately after the Emergency Stop switch is pressed. In addition, stopping time and stopping distance vary by following factors:

Hand weight	WEIGHT Setting	ACCEL Setting
Workpiece weight	SPEED Setting	Posture etc.

For stopping time and stopping distance of the Manipulator, refer to "*Appendix B: Stopping Time and Stopping Distance in Emergency*".

1.5 Safeguard

To ensure safe operation, install a safety system using safety doors, light curtains, safety floor mats, etc.

When a closed safeguard is open during robot motion, the safeguard interlock function operates. The robot stops immediately and enters into pause state. Then, all robot motors are turned OFF. The descriptions below explain how the safeguard input works.

Safeguard open : The robot stops immediately, motors are turned OFF, and further operation is impossible until either the safeguard is closed or TEACH or TEST mode is turned ON and the enable circuit is engaged.

Safeguard closed : The robot can automatically operate in unrestricted (high power) state.

Do not open the safeguard unnecessarily while motor is ON. Frequent safeguard inputs affect the life of the relay.

Rough normal relay life: Approximately 20,000 times

For the safeguard, do not use the E-STOP circuit.

For details of wiring instructions, refer to the following manual:

RC700 series Manual - Functions required for designing – 11. EMERGENCY

For details of Safeguard, refer to the following manual:

RC700 series Manual - Functions required for designing – 2.7.1 Connection to EMERGENCY Connector

NOTE

Test pulse cannot be used with the safeguard input of this model.

WARNING	■ The EMERGENCY connector on the controller has a safeguard input circuit to connect the safety device interlock switch. To protect operators working near the robot, be sure to connect the interlock switch and make sure that it works properly. ■ The time to stop the robot and the stopping distance by the safeguard interlock function will change depending on the conditions of use. Be sure to confirm that safety is ensured according to the installation environment of the robot.

Stopping distance when the safeguard is opened

The Manipulator in operation cannot stop immediately after the safeguard is opened. In addition, stopping time and stopping distance vary by following factors:

Hand weight	WEIGHT Setting	ACCEL Setting
Workpiece weight	SPEED Setting	Posture etc.

For stopping time and stopping distance of the Manipulator, refer to "*Appendix C: Stopping Time and Stopping Distance When the Safeguard is Opened*".

1.6 Emergency Movement Without Drive Power

When the system is placed in emergency mode, push the arm or joint of the Manipulator by hand as shown below:

Arm #1 ..... Push the arm by hand.

Arm #2 ..... Push the arm by hand.

Joint #3 ..... The joint cannot be moved up/down by hand until the electromagnetic brake applied to the joint has been released. Move the joint up/down while pressing the brake release switch.

Joint #4 ..... Rotate the shaft by hand.

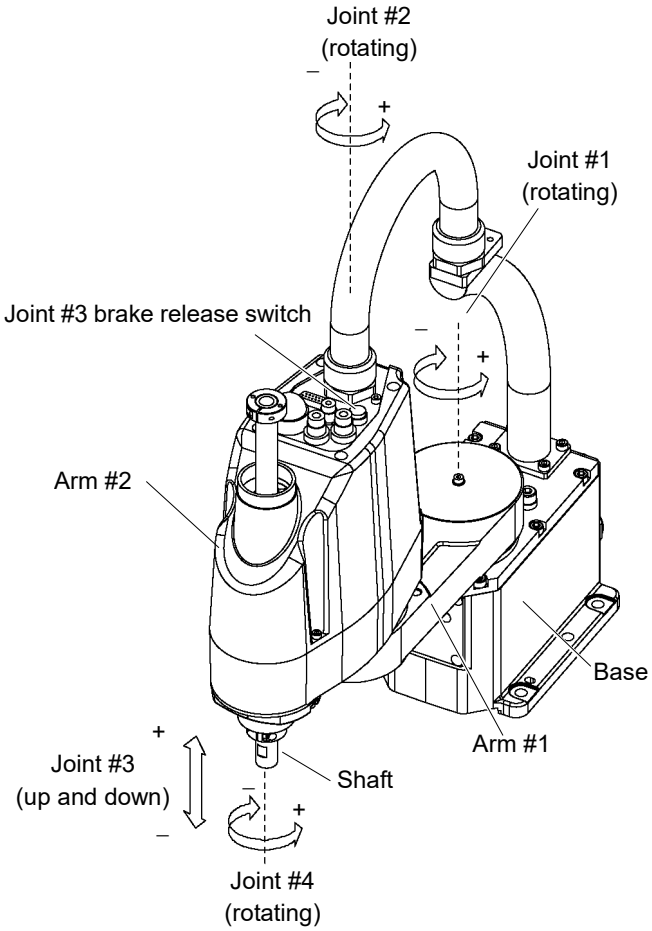

NOTE ☞ The brake release switch affects only Joint #3. When the brake release switch is pressed in emergency mode, the brake for Joint #3 is released.

Be careful of the shaft while the brake release switch is pressed because the shaft may be lowered by the weight of an end effector.

1.7 ACCELS Setting for CP Motions

To make the Manipulator move in CP motion, see the following and set ACCELS properly according to the tip load and the Z-axis height.

NOTE
☞ Improper setting may cause following problems.
Reduction of the life and damage of the ball screw spline

Set ACCELS as follows according to the Z-axis height.

ACCELS setting value by Z-axis position and tip load

Z position (mm)	Tip load		
	1kg or less	2kg or less	3kg or less
0 > Z >= - 50	25000 or less	25000 or less	24000 or less
- 50 > Z >= - 100		24000 or less	16000 or less
- 100 > Z >= - 150		18000 or less	12000 or less

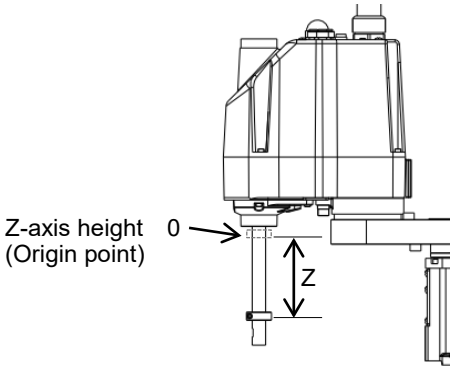

If the Manipulator is operated in CP motion with the wrong set values, make sure to check the following point.

Whether the ball screw spline shaft is deformed or bent

1.8 Warning Labels

The Manipulator has the following warning labels.

The warning labels are attached around the locations where specific dangers exist.
Be sure to comply with descriptions and warnings on the labels to operate and maintain the Manipulator safely.
Do not tear, damage, or remove the warning labels. Use meticulous care when handling those parts or units to which the following warning labels are attached as well as the nearby areas.

Location	Warning Label	NOTE
A		Before loosening the base mounting screws, hold the arm and secure it tightly with a band to prevent hands or fingers from being caught in the Manipulator.
B		Be careful to avoid collision.
C		Hazardous voltage exists while the Manipulator is ON. To avoid electric shock, do not touch any internal electric parts.

Location	Warning Label	NOTE
D		You can catch your hand or fingers between the shaft and cover when bringing your hand close to moving parts. * Manipulators with bellows do not have this label since there is no danger of being your hand or fingers caught.
E		Be careful of the hand falling or rotating while the brake release switch is being pressed.
F		Only authorized personnel should perform sling work and operate a crane and a forklift. When these operations are performed by unauthorized personnel, it is extremely hazardous and may result in serious bodily injury and/or severe equipment damage to the robot system.
G		HOT Be careful not to burn yourself.

Location	Label	Note
1	–	The product name, model name, serial number, information which laws and regulations are supported, product specifications, manufacturer, importer, date of manufacture, country of manufacture, etc. are listed. For details, see the label affixed to the product.

Location of Labels

Common

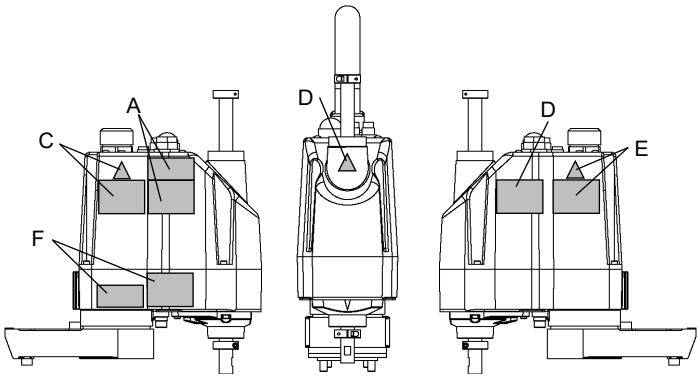

Table Top Mounting

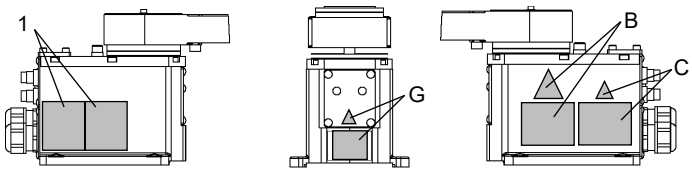

Multiple Mounting

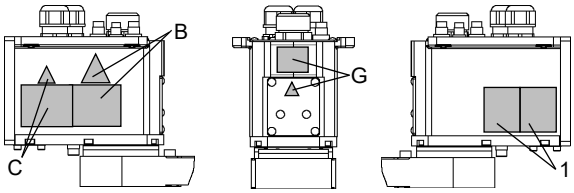

1.9 Response for Emergency or Malfunction

1.9.1 Collision

When the Manipulator collides with a mechanical stopper or peripheral device etc., discontinue use and contact the supplier.

1.9.2 Getting body caught in Manipulator

When the operator is caught between the Manipulator and a mechanical part such as a base table, press the emergency stop switch to release the brake on the subject arm, and then move the arm by hand.

Get body caught in the arms:
The break is not working. Move the arms manually.

Get body caught in the shaft:
The break is working. Press the break release switch and move the shaft.

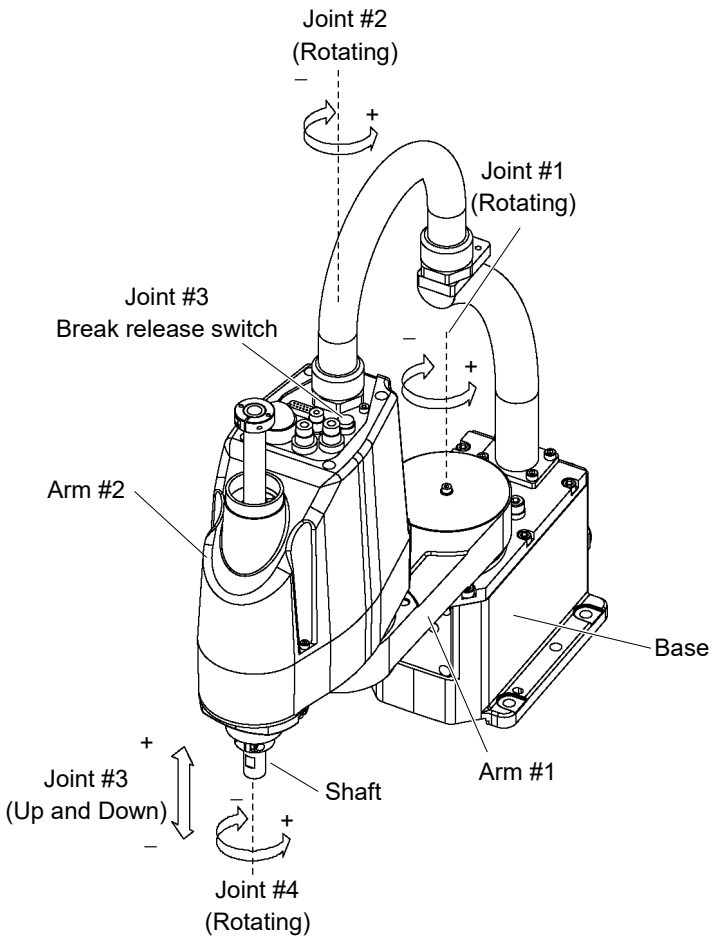

CAUTION	■ While pressing the break release switch, not only Joint #3 but also Joint #4 may move due to its own weight. Be careful of the shaft falling or rotating.

2. Specifications

2.1 Model Number and Model Differences

G3-25 1 S □-R-UL

□ : Standard
-UL : UL1740 certified

Type
□ : Standard
R : Right-Curved
L : Left-Curved

Mounting type
□ : Table Top Mounting
M : Multiple Mounting

Environment
S : Standard
C : Cleanroom & ESD (Anti-Static)

Joint #3 stroke
1 : 150 mm
: 120 mm (Cleanroom-model)

Arm length
25 : 250 mm
30 : 300 mm
35 : 350 mm

Environment

Cleanroom-model

This model has additional features that reduce dust emitted by the Manipulator to enable use in clean room environments.

For details of the specifications, refer to *Appendix A: Specifications.*

Arm length	Arm type	Mounting type	Environment	Joint #3 stroke	Model Number
250 mm	Standard	Table Top Mounting	Standard	150	G3-251S
			Cleanroom	120	G3-251C
300 mm	Standard	Table Top Mounting	Standard	150	G3-301S
			Cleanroom	120	G3-301C
		Multiple Mounting	Standard	150	G3-301SM
			Cleanroom	120	G3-301CM
	Right-Curved	Table Top Mounting	Standard	150	G3-301S-R
			Cleanroom	120	G3-301C-R
	Left-Curved	Table Top Mounting	Standard	150	G3-301S-L
			Cleanroom	120	G3-301C-L
350 mm	Standard	Table Top Mounting	Standard	150	G3-351S
			Cleanroom	120	G3-351C
		Multiple Mounting	Standard	150	G3-351SM
			Cleanroom	120	G3-351CM
	Right-Curved	Table Top Mounting	Standard	150	G3-351S-R
			Cleanroom	120	G3-351C-R
		Multiple Mounting	Standard	150	G3-351SM-R
			Cleanroom	120	G3-351CM-R
	Left-Curved	Table Top Mounting	Standard	150	G3-351S-L
			Cleanroom	120	G3-351C-L
		Multiple Mounting	Standard	150	G3-351SM-L
			Cleanroom	120	G3-351CM-L

(Unit: mm)

2.2 Part Names and Outer Dimensions

2.2.1 Table Top Mounting

Standard-model G3-**1S

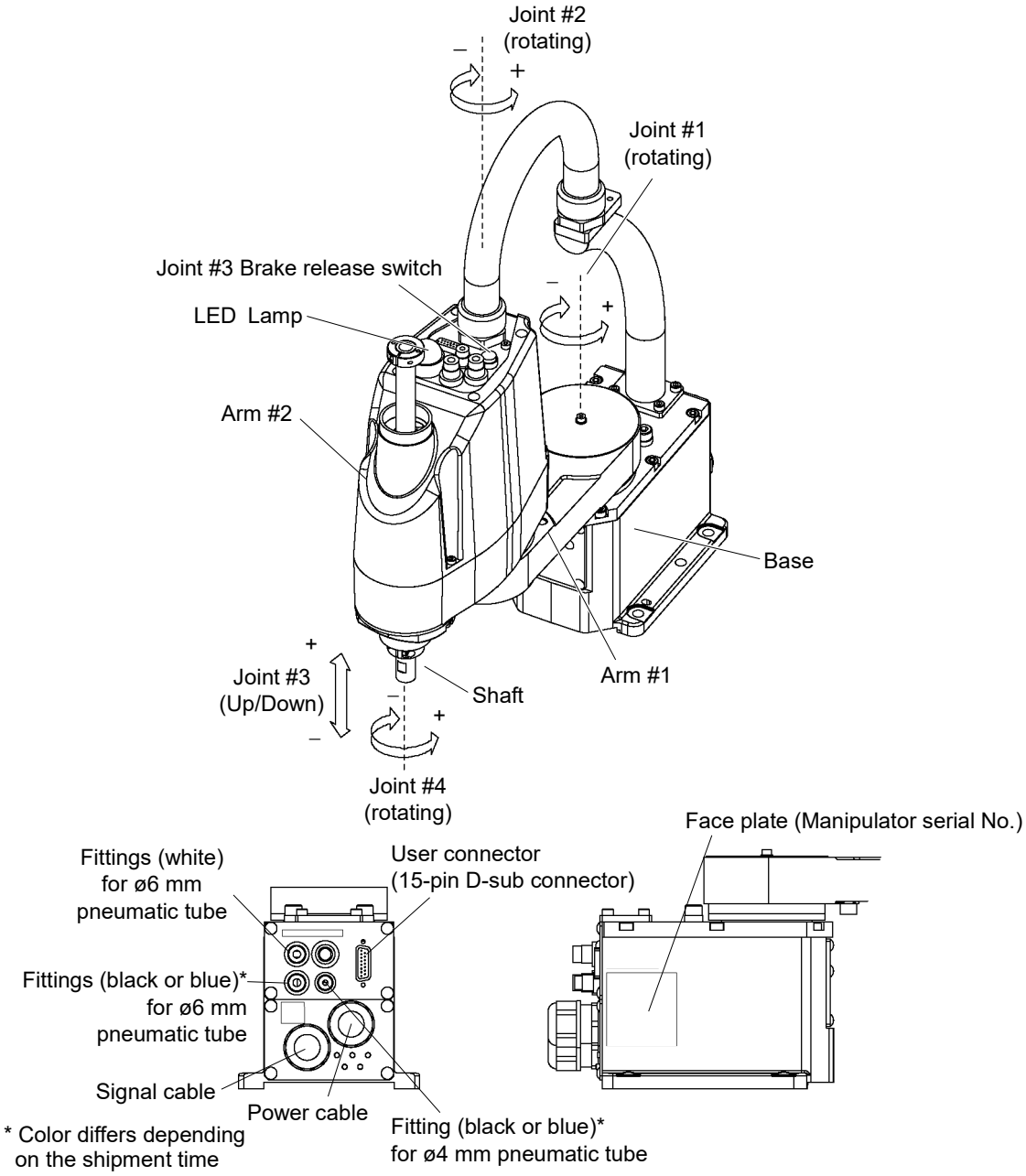

NOTE

- The brake release switch affects only Joint #3. When the brake release switch is pressed in emergency mode, the brake for Joint #3 is released.
- While the LED lamp is on, the current is being applied to the manipulator. Performing any work with the power ON is extremely hazardous and it may result in electric shock and/or improper function of the robot system. Make sure to turn OFF the controller power before the maintenance work.

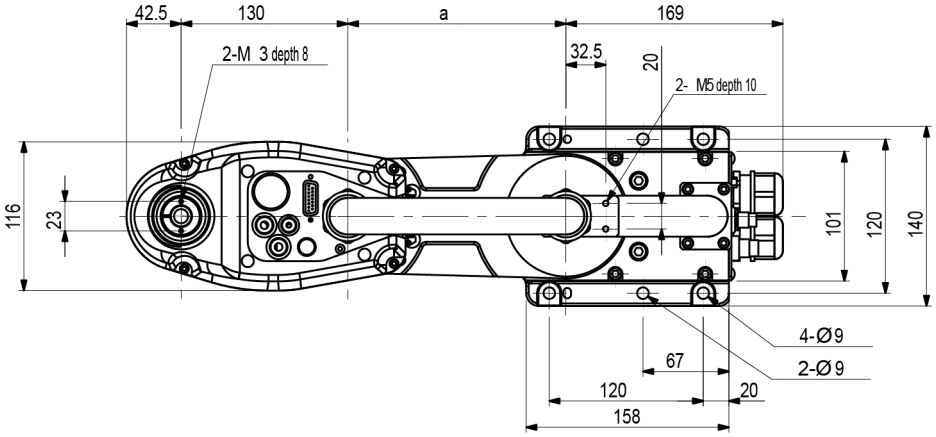

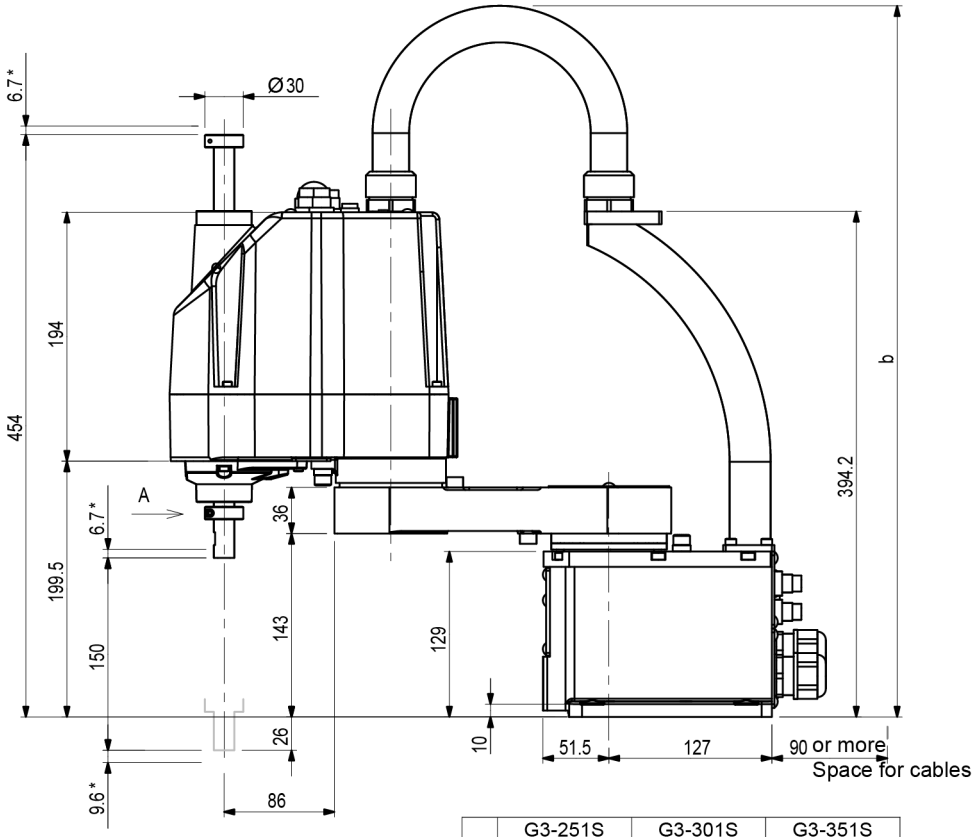

(*) indicates the stroke margin by mechanical stop.

	G3-251S	G3-301S	G3-351S
a	120	170	220
b	Max.545	Max.575	Max.595

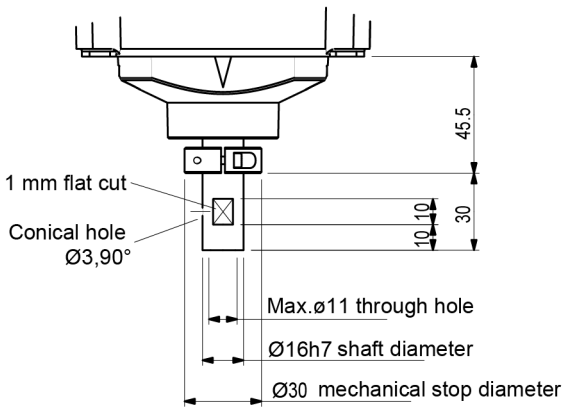

Detail of “A”
(Calibration point position of Joints #3 and #4)

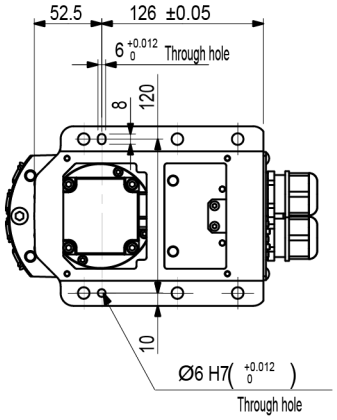

Reference through hole
(View from the bottom of the base)

Cleanroom-model: G3-***C

The following figures show the additional parts and specifications for Cleanroom-model (Table Top mounting) when compared with the Standard-model in appearance.

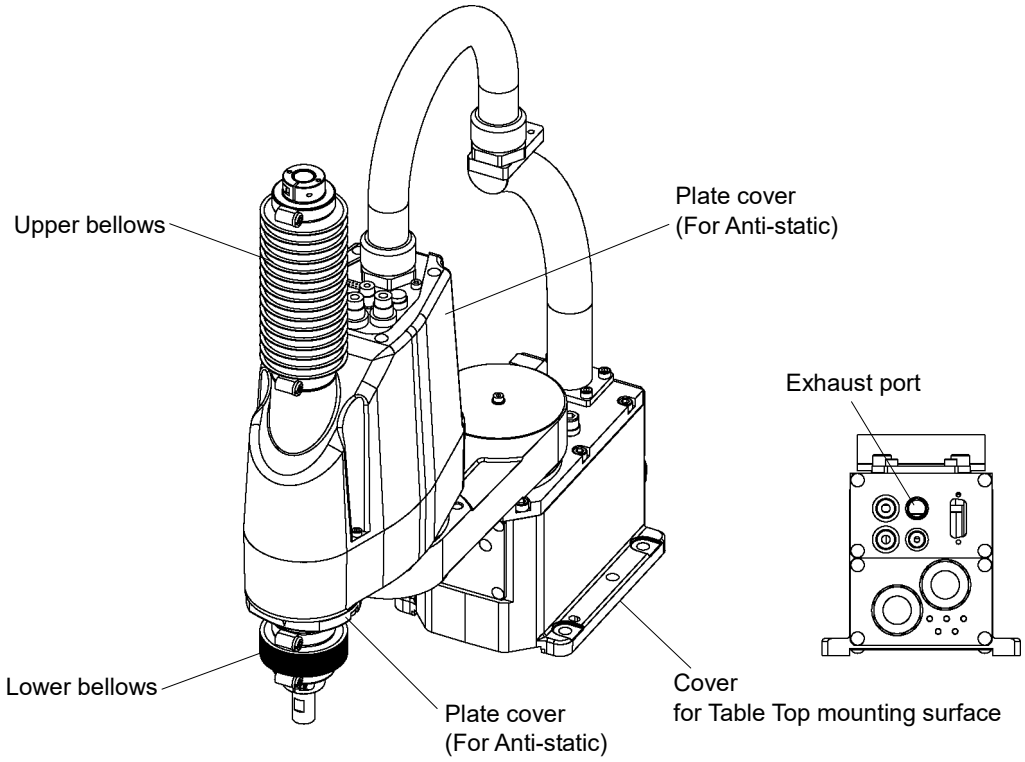

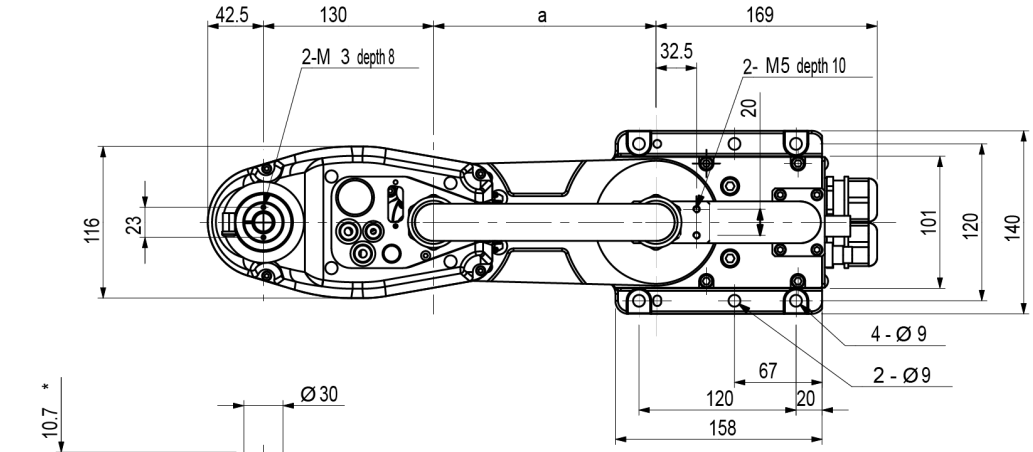

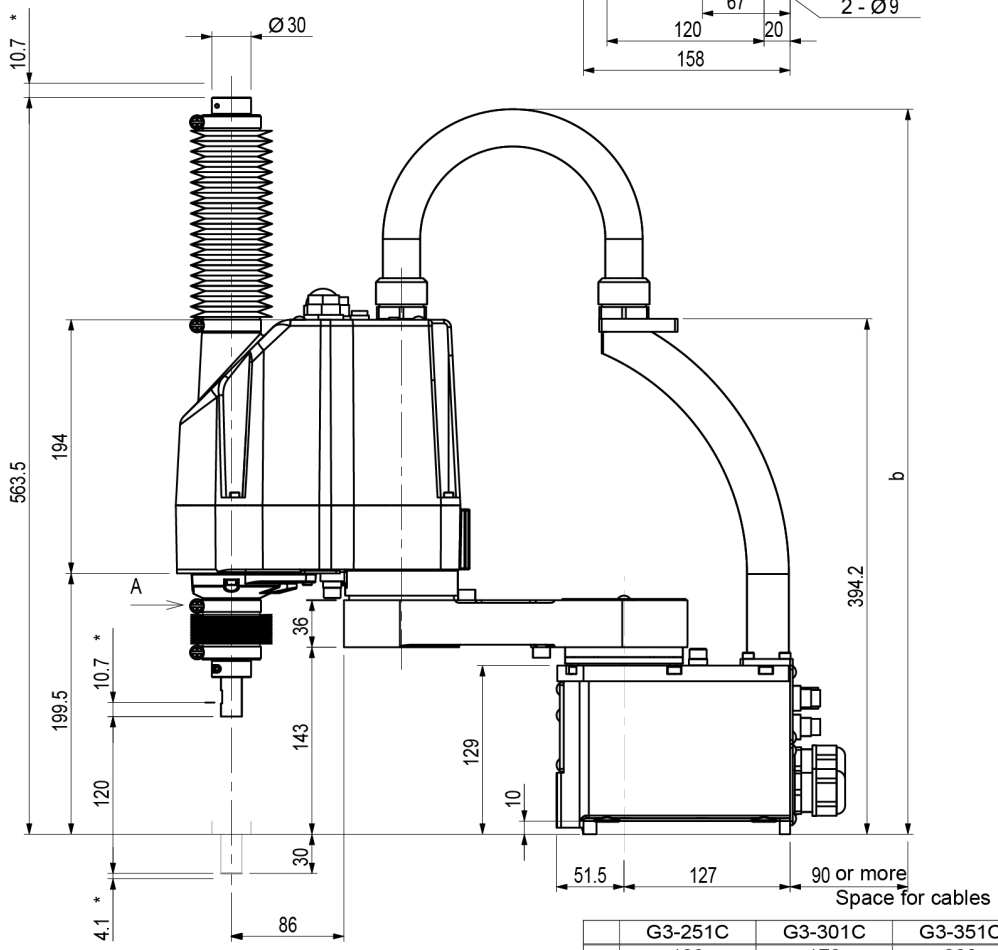

(*) indicates the stroke margin by mechanical stop.

	G3-251C	G3-301C	G3-351C
a	120	170	220
b	Max.545	Max.575	Max.595

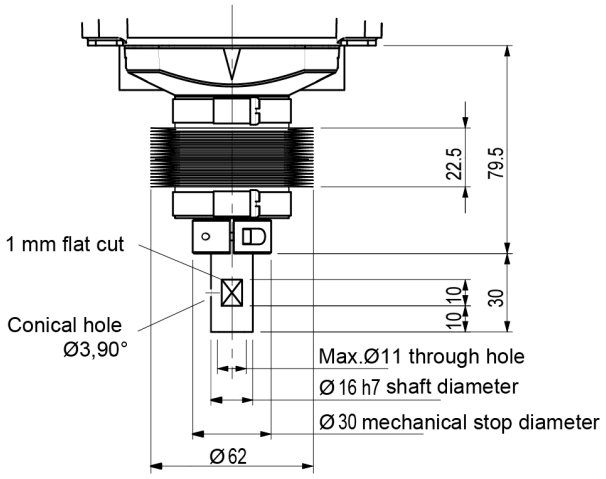

Detail of "A"
(Calibration point position of Joints #3 and #4)

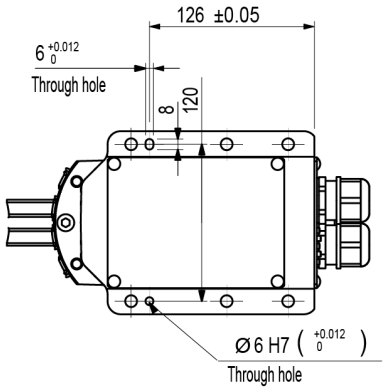

Reference through hole
(View from the bottom of the base)

2.2.2 Multiple Mounting

Standard-model: G3-**1SM

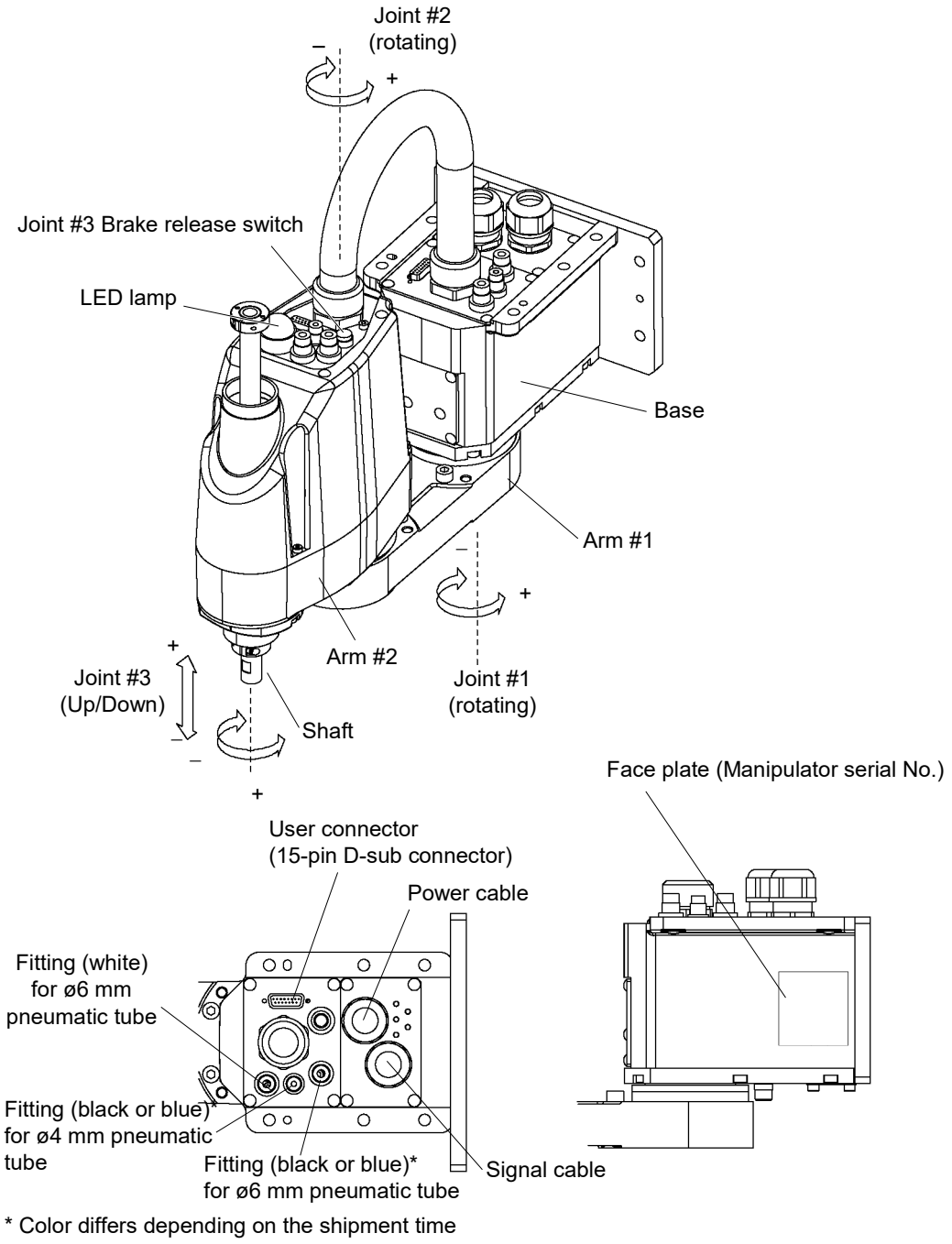

* Color differs depending on the shipment time

NOTE

- The brake release switch affects only Joint #3. When the brake release switch is pressed in emergency mode, the brake for Joint #3 is released.
- While the LED lamp is on, the current is being applied to the manipulator. Performing any work with the power ON is extremely hazardous and it may result in electric shock and/or improper function of the robot system. Make sure to turn OFF the controller power before the maintenance work.

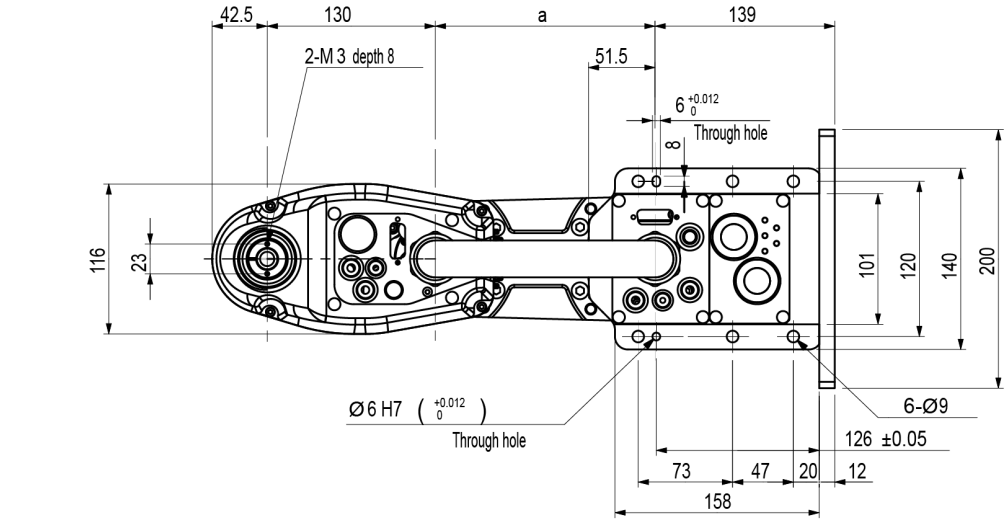

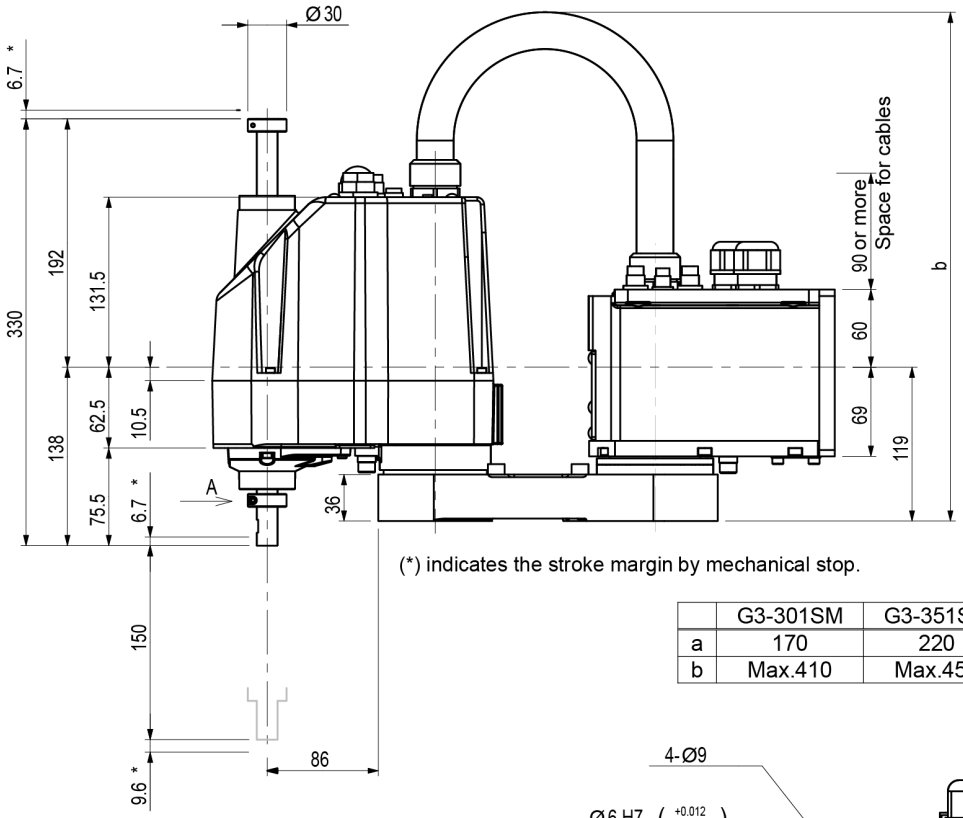

(*) indicates the stroke margin by mechanical stop.

	G3-301SM	G3-351SM
a	170	220
b	Max.410	Max.450

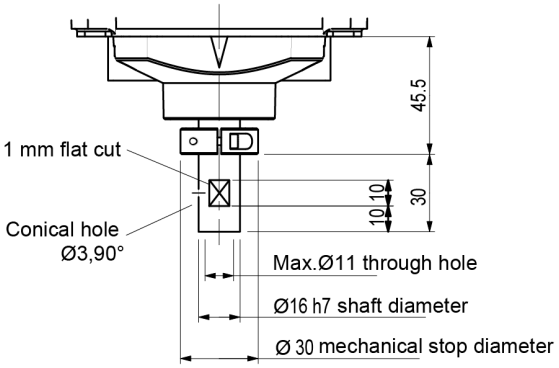

Detail of "A"
(Calibration point position of Joints #3 and #4)

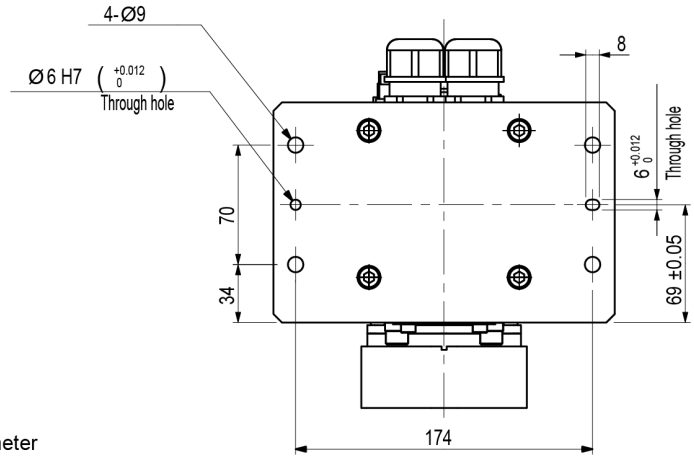

Reference through hole
(View from the bottom of the base)

Cleanroom-model: G3-**1CM

The following figures show the additional parts and specifications for Cleanroom-model (Multiple Mounting) when compared with the Standard-model in appearance.

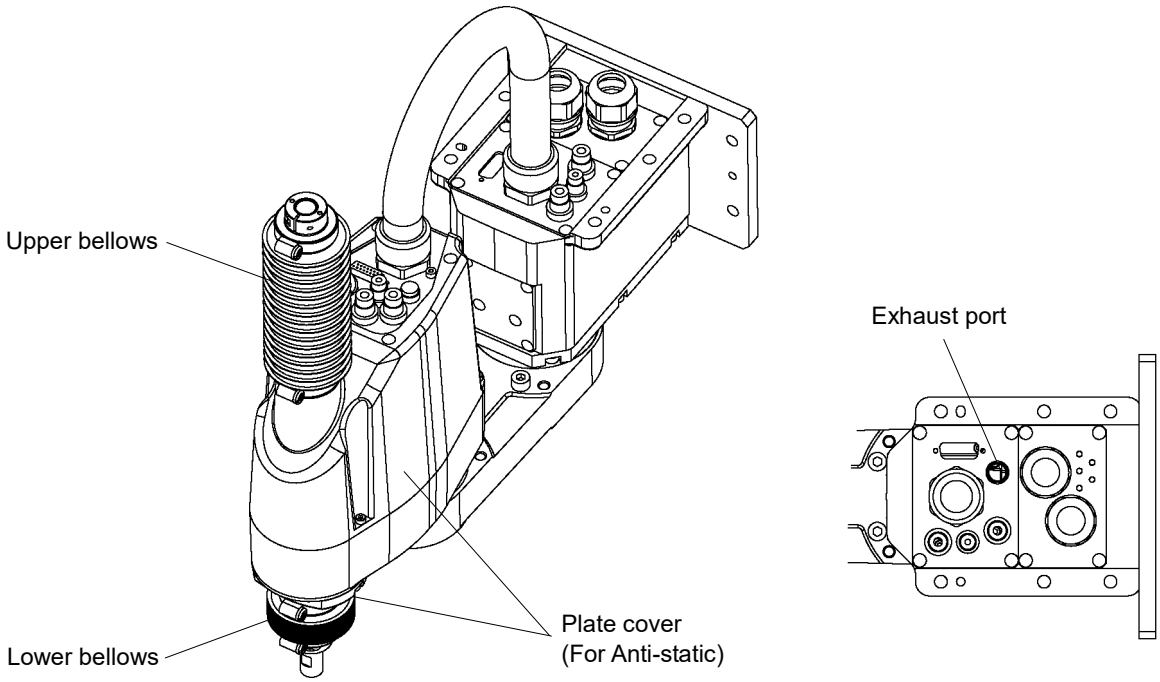

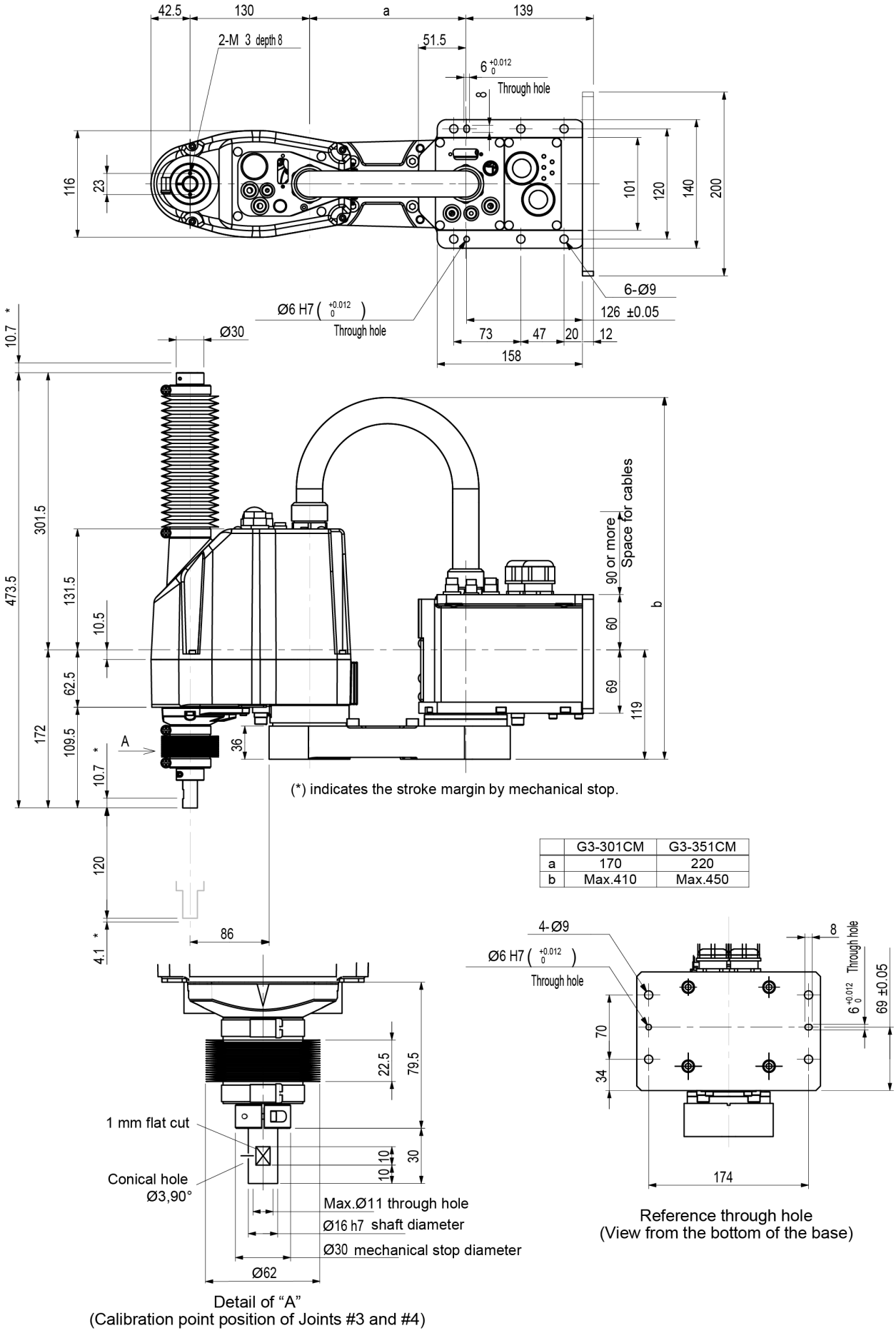

	G3-301CM	G3-351CM
a	170	220
b	Max.410	Max.450

2.3 Specifications

For details of each manipulator specifications, refer to *Appendix A: Specifications.*

2.4 How to Set the Model

The Manipulator model for your system has been set before shipment from the factory. It is normally not required to change the model when you receive your system.

CAUTION	■ When you need to change the setting of the Manipulator model, be sure to set the Manipulator model properly. Improper setting of the Manipulator model may result in abnormal or no operation of the Manipulator and/or cause safety problems.

NOTE

If the custom specifications number (MT***) is described on MODEL of the signature label (S/N label), the Manipulator has custom specifications. (A label with only the custom specifications number may be attached depending on shipment time.)

The custom specifications may require a different configuration procedure; check the custom specifications number (MT***) and contact the supplier of your region when necessary.

The Manipulator model can be set from software.
Refer to the chapter *Robot Configuration* in the *EPSON RC+ User's Guide*.

3. Environments and Installation

Designing and installation of the Manipulators and robotic equipment shall be performed by personnel who has taken robot system training held by us and suppliers and should conform to all national and local codes.

3.1 Environmental Conditions

A suitable environment is necessary for the robot system to function properly and safely. Be sure to install the robot system in an environment that meets the following conditions:

Item	Conditions
Ambient temperature *	5 to 40°C
Ambient relative humidity	10 to 80% (no condensation)
First transient burst noise	1 kV or less (Signal wire)
Electrostatic noise	4 kV or less
Altitude	1000 m or lower
Environment	- Install indoors. - Keep away from direct sunlight. - Keep away from dust, oily smoke, salinity, metal powder or other contaminants. - Keep away from flammable or corrosive solvents and gases. - Keep away from water. - Keep away from shocks or vibrations. - Keep away from sources of electric noise. - Keep away from explosive area - Keep away from a large quantity of radiation

NOTE

Manipulators are not suitable for operation in harsh environments such as painting areas, etc. When using Manipulators in inadequate environments that do not meet the above conditions, please contact the supplier of your region.

* The ambient temperature conditions are for the Manipulators only. For the Controller conditions, refer to the Controller manual.

When the product is used in a low temperature environment around the minimum temperature of the product specification, or when the product is suspended for a long time on holidays or at night, a collision detection error may occur due to the large resistance of the drive unit immediately after the start of operation. In such a case, it is recommended to warm up for about 10 minutes.

Special Environmental Conditions

The surface of the Manipulator has general oil resistance. However, if your requirements specify that the Manipulator must withstand certain kinds of oil, please contact the supplier of your region.

Rapid change in temperature and humidity can cause condensation inside the Manipulator.

If your requirements specify that the Manipulator handles food, please contact the supplier of your region to check whether the Manipulator will damage the food or not.

The Manipulator cannot be used in corrosive environments where acid or alkaline is used. In a salty environment where the rust is likely to gather, the Manipulator is susceptible to rust.

WARNING	■ Use an earth leakage breaker on the AC power cable of the Controller to avoid electric shock and circuit breakdown caused by short circuit. Prepare the earth leakage breaker that pertains the Controller you are using. For details, refer to the Controller manual.

CAUTION	■ When cleaning the Manipulator, do not rub it strongly with alcohol or benzene. It may lose luster on the coated face.

3.2 Base Table

A base table for anchoring the Manipulator is not supplied. Please make or obtain the base table for your Manipulator. The shape and size of the base table differs depending on the use of the robot system. For your reference, we list some Manipulator table requirements here.

The base table must not only be able to bear the weight of the Manipulator but also be able to withstand the dynamic movement of the Manipulator when it operates at maximum acceleration/deceleration. Ensure that there is enough strength on the base table by attaching reinforcing materials such as crossbeams.

The torque and reaction force produced by the movement of the Manipulator are as follows:

Max. Reaction torque on the horizontal plate : 300 Nm

Max. Horizontal reaction force : 2000 N

Max. Vertical reaction force : 1000 N

The threaded holes required for mounting the Manipulator base are M8. Use mounting bolts with specifications conforming to ISO898-1 property class: 10.9 or 12.9.
For dimensions, refer to *3.3 Mounting Dimensions*.

The plate for the Manipulator mounting face should be 20 mm thick or more and made of steel to reduce vibration. The surface roughness of the steel plate should be 25 μm or less.

The table must be secured on the floor or wall to prevent it from moving.

The Manipulator installation surface should have a flatness of 0.5 mm or less and an inclination of 0.5 ° or less. If the flatness of the installation surface is improper, the base may be damaged or the robot may not fully show its performance.

When using a leveler to adjust the height of the base table, use a screw with M16 diameter or more.

If you are passing cables through the holes on the base table, see the figures below.

[unit: mm]

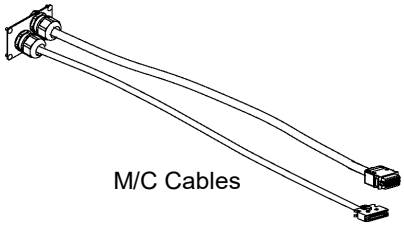

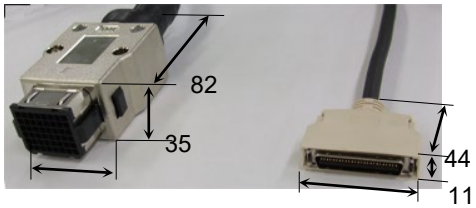

54
Power Cable
Connector (Straight)

49
Signal Cable
Connector

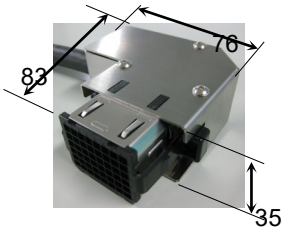

Power Cable
Connector (L-shaped)

Do not remove the M/C cables from the Manipulator.

NOTE

For environmental conditions regarding space when placing the Controller on the base table, refer to the *Controller manual*.

WARNING	■ To ensure safety, a safeguard must be installed for the robot system. For details on the safeguard, refer to the *EPSON RC+ User's Guide*.

3.3 Mounting Dimensions

The maximum space described in figures shows that the radius of the end effector is 60 mm or less. If the radius of the end effector exceeds 60 mm, define the radius as the distance to the outer edge of maximum space.
If a camera or electromagnetic valve extends outside of the arm, set the maximum range including the space that they may reach.

Be sure to allow for the following extra spaces in addition to the space required for mounting the Manipulator, Controller, and peripheral equipment.

Space for teaching

Space for maintenance and inspection
(Ensure a space to open the rear side cover and the maintenance cover for maintenance.)

Space for cables

The minimum bend radius of the power cable is 90 mm. When installing the cable, be sure to maintain sufficient distance from obstacles. In addition, leave enough space for other cables so that they are not bent forcibly.

Ensure distance to the safeguard from the maximum motion range is more than 100 mm.

3.3.1 Table Top Mounting – Straight Arm

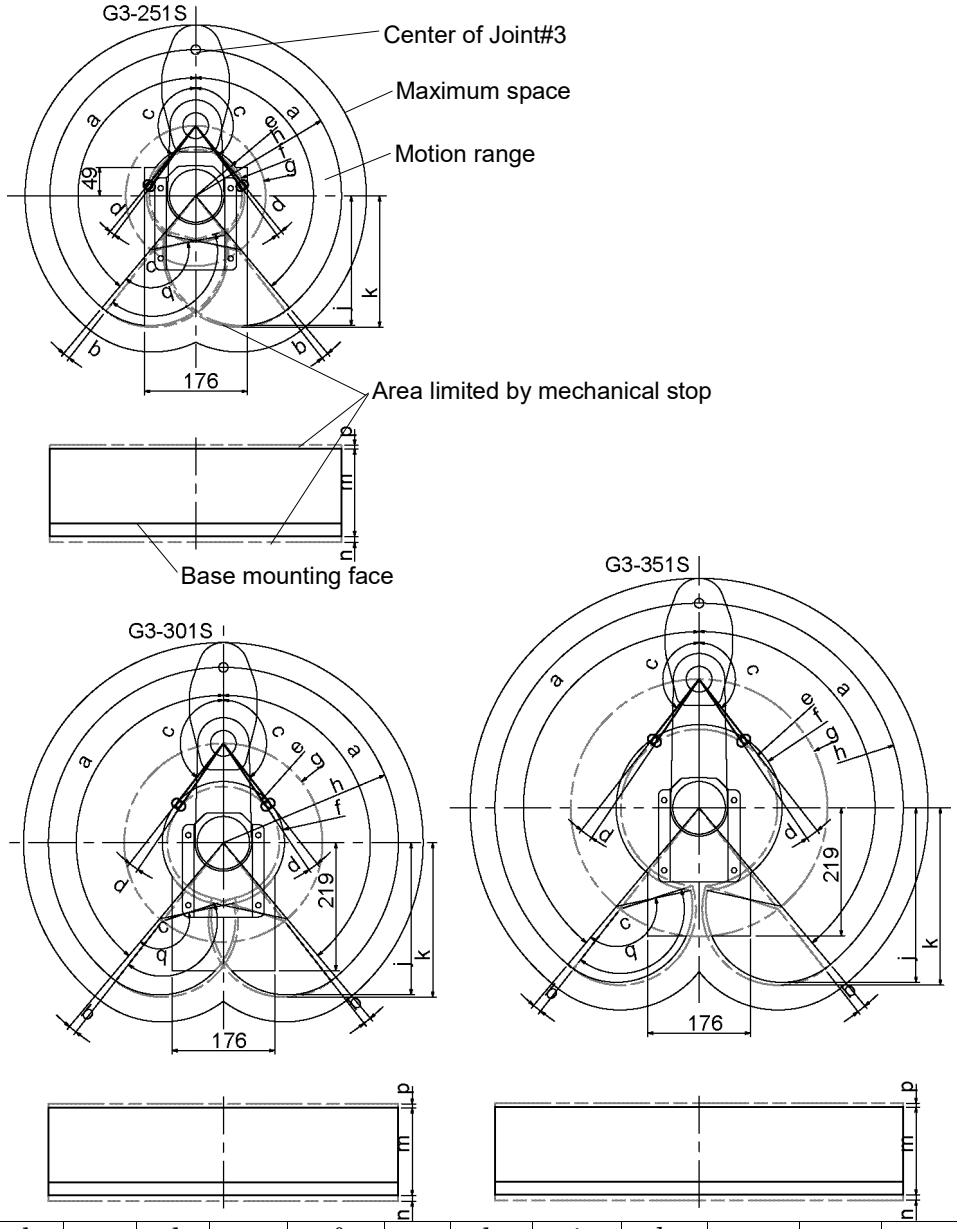

	a	b	c	d	e	f	g	h	j	k	q	m	n	p
G3-251S	140°	2°	141°	2.3°	79.3	84.0	120	250	221.9	224.5	143.3°	150	9.6	6.7
G3-251C			137°	6.3°		92.0						120	4.1	10.7
G3-301S			142°	3.8°	96.2	104.8	170	300	260.2	263.9	145.8°	150	9.6	6.7
G3-301C			141°	4.8°		107.1						120	4.1	10.7
G3-351S			142°	3.8°	134.2	142.3	220	350	298.5	303.3		150	9.6	6.7
G3-351C			142°	3.8°		146.6						120	4.1	10.7

g	Length of Arm #1 (mm)	b	Joint #1 angle to hit mechanical stop (degree)
h-g	Length of Arm #2 (mm)	d	Joint #2 angle to hit mechanical stop (degree)
m	Stroke of Joint #3 (mm)	n	Joint #3 range to hit lower mechanical stop (mm)
f	Motion range	p	Joint #3 range to hit upper mechanical stop (mm)
a	Motion range of Joint #1 (degree)	j	Range from center of axis to back end (mm)
c	Motion range of Joint #2 (degree)	k	Range from center of axis to back end after moved to mechanical stop (mm)
e	Mechanical stop area	q	Joint #2 motion range + angle to hit mechanical stop (degree)

3.3.2 Table Top Mounting – Left-Curved Arm

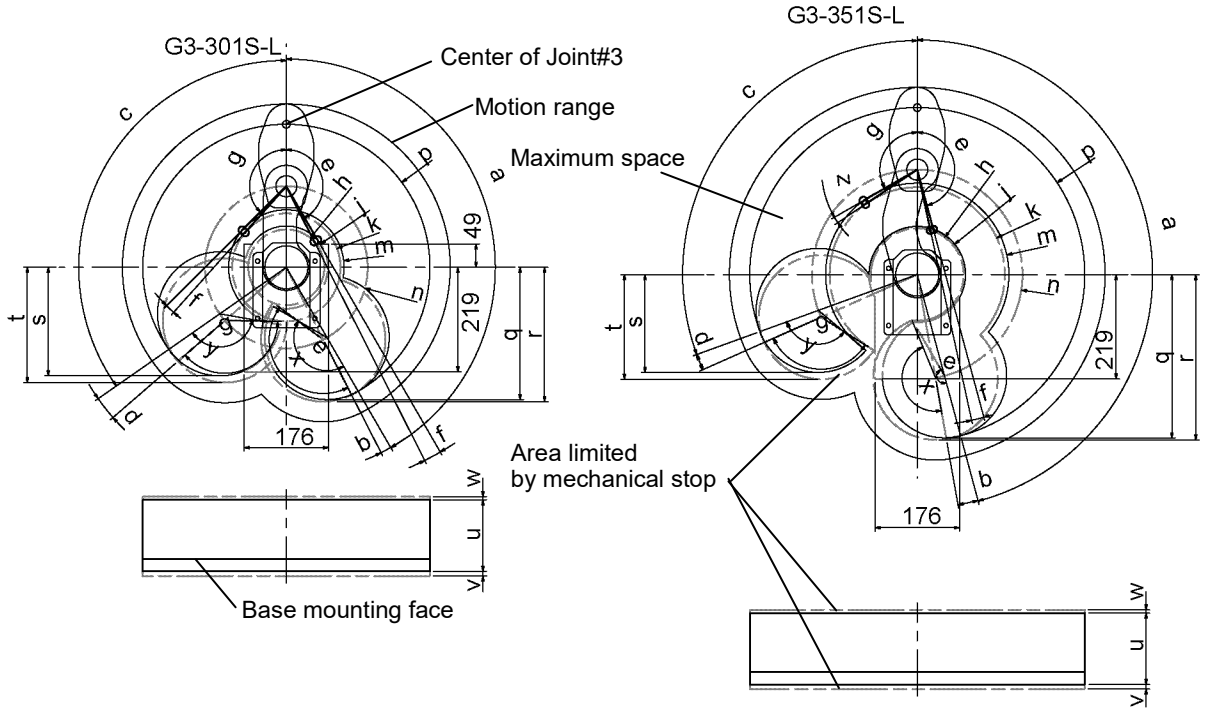

	a	b	c	d	e	f	g	h	j	k	m	n	p	q
G3-301S-L	150°	3°	125°	6°	150°	3.3°	135°	79.5	86.8	113.2	120.7	170	300	277.2
G3-301C-L					145°	8.3°								
G3-351S-L	165°	5°	110°	4°	165°	2.8°	120°	97.0	100.3	183.0	191.6	220	350	342.5
G3-351C-L					160°	7.8°			107.5	184.2				

	r	s	t	u	v	w	x	y	z
G3-301S-L	281.4	227.5	241.5	150	9.6	6.7	153.3°	138.3°	—
G3-301C-L	288.7	201.8	227.5	120	4.1	10.7			3.8°
G3-351S-L	346.6	205.2	219.4	150	9.6	6.7	167.8°	123.8°	3.8°
G3-351C-L			222.9	120	4.1	10.7			

n	Length of Arm #1 (mm)	b, d	Joint #1 angle to hit mechanical stop (degree)
p-n	Length of Arm #2 (mm)	f, z	Joint #2 angle to hit mechanical stop (degree)
u	Stroke of Joint #3 (mm)	v	Joint #3 range to hit lower mechanical stop (mm)
m, j	Motion range	w	Joint #3 range to hit upper mechanical stop (mm)
a, c	Motion range of Joint #1 (degree)	q, s	Range from center of axis to back end (mm)
e, g	Motion range of Joint #2 (degree)	r, t	Range from center of axis to back end after moved to mechanical stop (mm)
h, k	Mechanical stop area	x, y	Joint #2 motion range + angle to hit mechanical stop (degree)

3.3.3 Table Top Mounting – Right-Curved Arm

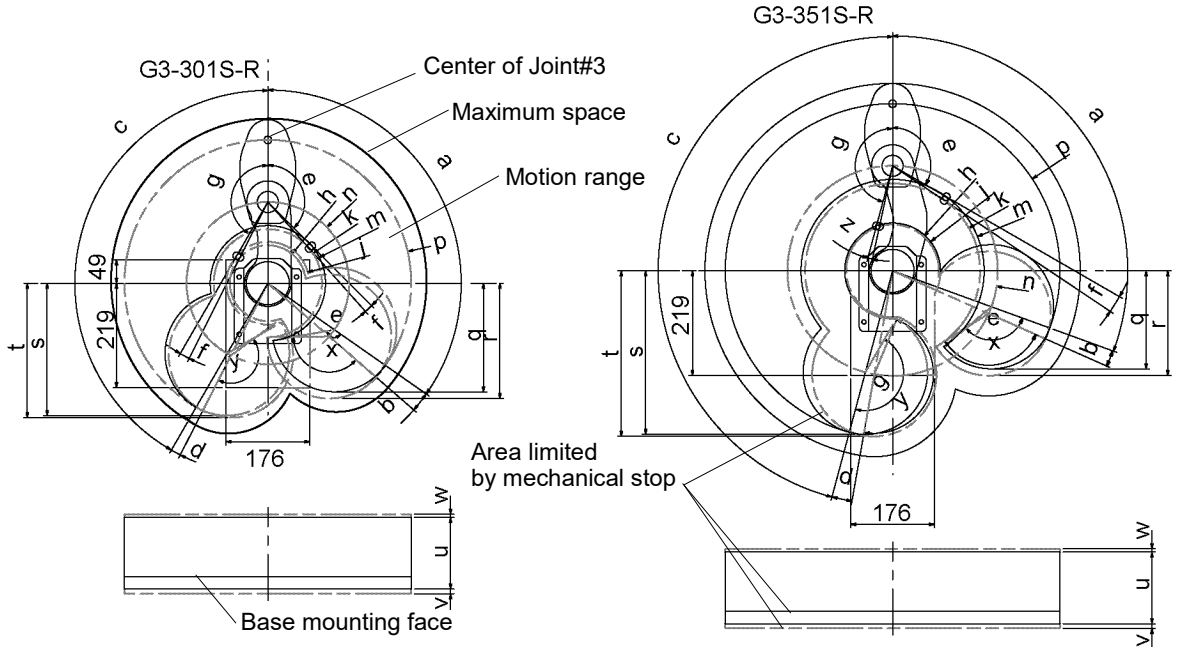

	a	b	c	d	e	f	g	h	j	k	m
G3-301S-R	125°	6°	150°	3°	135°	3.3°	150°	79.5	86.8	113.2	120.7
G3-301C-R							145°				
G3-351S-R	110°	4°	165°	5°	120°	3.8°	165°	97.0	100.3	183.0	191.6
G3-351C-R							160°		107.5	184.2	

	n	p	q	r	s	t	u	v	w	x	y	z
G3-301S-R	170	300	227.5	241.5	277.2	281.4	150	9.6	6.7	138.3°	153.3°	—
G3-301C-R			201.8	227.5		288.7	120	4.1	10.7			8.3°
G3-351S-R	220	350	205.2	219.4	342.5	346.6	150	9.6	6.7	123.8°	167.8°	2.8°
G3-351C-R				222.9			120	4.1	10.7			7.8°

n	Length of Arm #1 (mm)	b, d	Joint #1 angle to hit mechanical stop (degree)
p-n	Length of Arm #2 (mm)	f, z	Joint #2 angle to hit mechanical stop (degree)
u	Stroke of Joint #3 (mm)	v	Joint #3 range to hit lower mechanical stop (mm)
m, j	Motion range	w	Joint #3 range to hit upper mechanical stop (mm)
a, c	Motion range of Joint #1 (degree)	q, s	Range from center of axis to back end (mm)
e, g	Motion range of Joint #2 (degree)	r, t	Range from center of axis to back end after moved to mechanical stop (mm)
h, k	Mechanical stop area	x, y	Joint #2 motion range + angle to hit mechanical stop (degree)

3.3.4 Multiple Mounting – Straight Arm

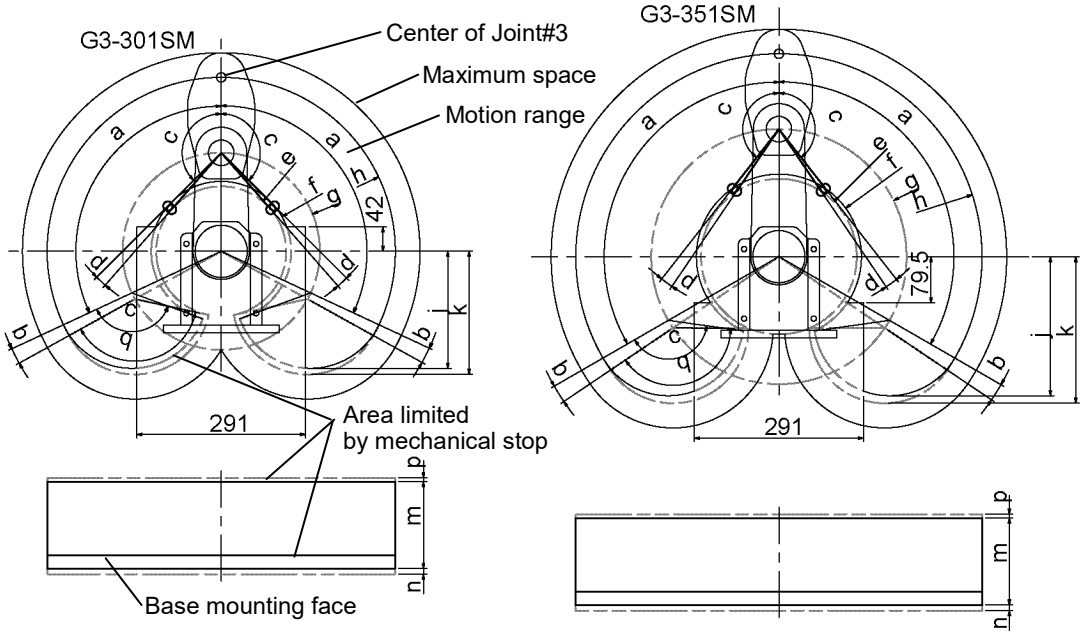

	a	b	c	d	e	f	g	h	j	k	q
G3-301SM/CM	115°	4°	135°	3.8°	112.0	120.7	170	300	201.8	212.4	138.8°
G3-351SM/CM	120°		142°		134.2	142.3	220	350	240.0	253.0	145.8°

	m	n	p
G3-301SM	150	9.6	6.7
G3-301CM	120	4.1	10.7
G3-351SM	150	9.6	6.7
G3-351CM	120	4.1	10.7

g	Length of Arm #1 (mm)	b	Joint #1 angle to hit mechanical stop (degree)
h-g	Length of Arm #2 (mm)	d	Joint #2 angle to hit mechanical stop (degree)
m	Stroke of Joint #3 (mm)	n	Joint #3 range to hit lower mechanical stop (mm)
f	Motion range	p	Joint #3 range to hit upper mechanical stop (mm)
a	Motion range of Joint #1 (degree)	j	Range from center of axis to back end (mm)
c	Motion range of Joint #2 (degree)	k	Range from center of axis to back end after moved to mechanical stop (mm)
e	Mechanical stop area	q	Joint #2 motion range + angle to hit mechanical stop (degree)

3.3.5 Multiple Mounting – Left-Curved Arm

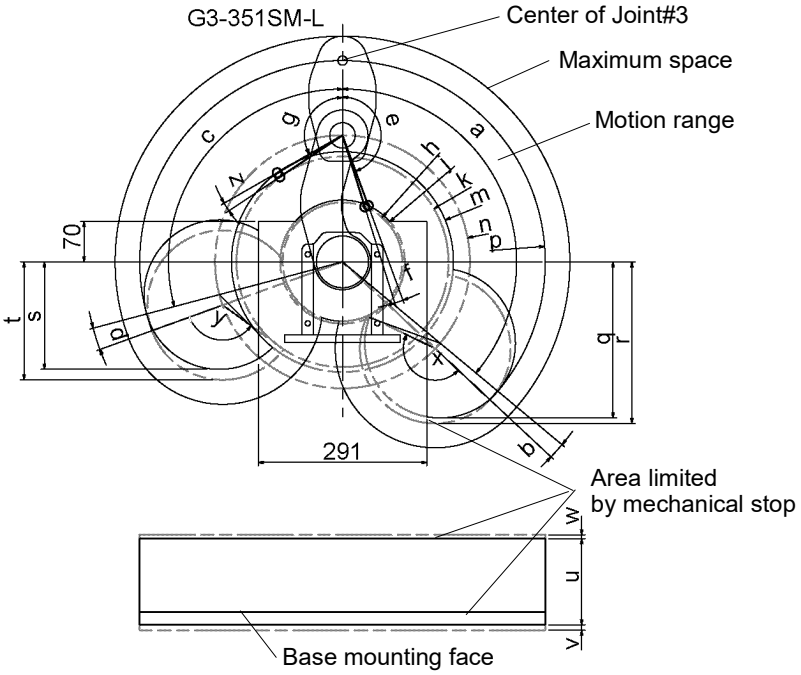

	a	b	c	d	e	f	g	h	j	k	m
G3-351SM-L	130°	3.3°	105°	5°	160°	2.8°	120°	103.3	107.5	183.0	191.9
G3-351CM-L		2°			150°	12.8°			125.6		

	n	p	q	r	s	t	x	y	z
G3-351SM-L	220	350	271.4	280.8	186.9	205.2	162.8°	123.8°	3.8°
G3-351CM-L				277.2					

	u	v	w
G3-351SM-L	150	9.6	6.7
G3-351CM-L	120	4.1	10.7

n	Length of Arm #1 (mm)	b, d	Joint #1 angle to hit mechanical stop (degree)
p-n	Length of Arm #2 (mm)	f, z	Joint #2 angle to hit mechanical stop (degree)
u	Stroke of Joint #3 (mm)	v	Joint #3 range to hit lower mechanical stop (mm)
m, j	Motion range	w	Joint #3 range to hit upper mechanical stop (mm)
a, c	Motion range of Joint #1 (degree)	q, s	Range from center of axis to back end (mm)
e, g	Motion range of Joint #2 (degree)	r, t	Range from center of axis to back end after moved to mechanical stop (mm)
h, k	Mechanical stop area	x, y	Joint #2 motion range + angle to hit mechanical stop (degree)

3.3.6 Multiple Mounting – Right-Curved Arm

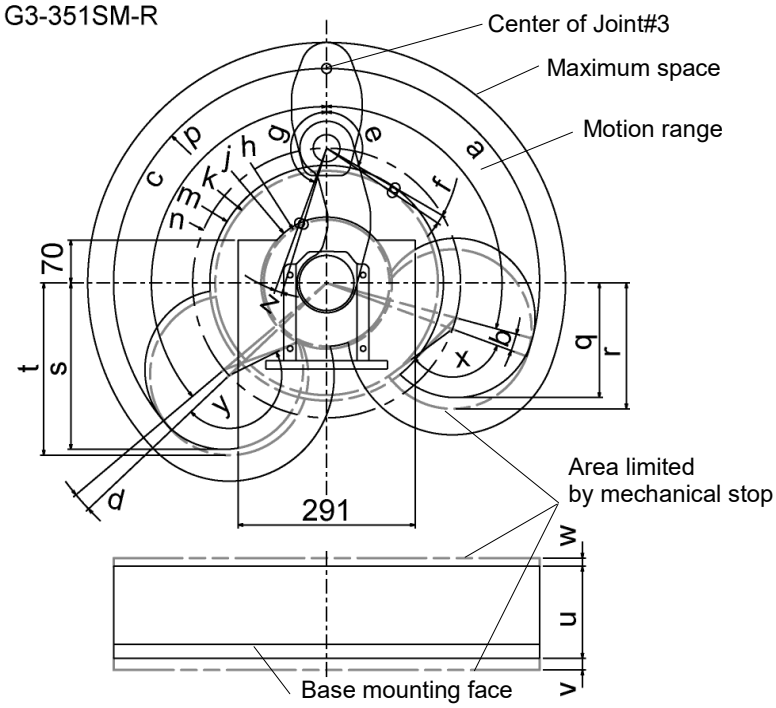

	a	b	c	d	e	f	g	h	j	k	m
G3-351SM-R	105°	5°	130°	3.3°	120°	3.8°	160°	103.3	107.5	183.0	191.9
G3-351CM-R				2°			150°		125.6		

	n	p	q	r	s	t	x	y	z
G3-351SM-R	220	350	186.9	205.2	271.4	280.8	123.8°	162.8°	2.8°
G3-351CM-R						277.2			12.8°

	u	v	w
G3-351SM-R	150	9.6	6.7
G3-351CM-R	120	4.1	10.7

n	Length of Arm #1 (mm)	b, d	Joint #1 angle to hit mechanical stop (degree)
p-n	Length of Arm #2 (mm)	f, z	Joint #2 angle to hit mechanical stop (degree)
u	Stroke of Joint #3 (mm)	v	Joint #3 range to hit lower mechanical stop (mm)
m, j	Motion range	w	Joint #3 range to hit upper mechanical stop (mm)
a, c	Motion range of Joint #1 (degree)	q, s	Range from center of axis to back end (mm)
e, g	Motion range of Joint #2 (degree)	r, t	Range from center of axis to back end after moved to mechanical stop (mm)
h, k	Mechanical stop area	x, y	Joint #2 motion range + angle to hit mechanical stop (degree)

3.4 Unpacking and Transportation

Transportation, and relocation shall be performed by personnel who has taken robot system training held by us and suppliers and should conform to all national and local codes.

WARNING	■ Only authorized personnel should perform sling work and operate a crane and a forklift. When these operations are performed by unauthorized personnel, it is extremely hazardous and may result in serious bodily injury and/or severe equipment damage to the robot system.

CAUTION	■ Using a cart or similar equipment, transport the Manipulator in the same manner as it was delivered. ■ After removing the bolts securing the Manipulator to the delivery equipment, the Manipulator can fall. Be careful not to get hands or fingers caught. ■ The arm is secured with a wire tie. Leave the wire tie secured until you finish the installation so as not to get hands or fingers caught. ■ To carry the Manipulator, have two or more people to work on it and secure the Manipulator to the delivery equipment or hold the areas indicated in gray in the figure (bottom of Arm #1 and bottom of the base) by hand. When holding the bottom of the base by hand, be very careful not to get your hands or fingers caught. 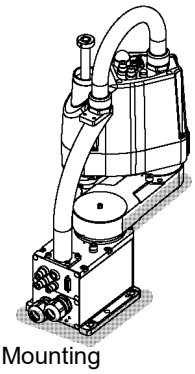 Table Top Mounting G3-251* : approx. 14 kg: 31 lb. G3-301* : approx. 14 kg: 31 lb. G3-351* : approx. 14 kg: 31 lb. 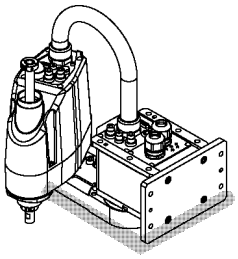 Multiple Mounting G3-301*M : approx. 14 kg: 31 lb. G3-351*M : approx. 14 kg: 31 lb ■ Stabilize the Manipulator with your hands when hoisting it. ■ When transporting the Manipulator for a long distance, secure it to the delivery equipment directly so that the Manipulator never falls. If necessary, pack the Manipulator in the same style as it was delivered.

3.5 Installation Procedure

The installation shall be made by personnel who has taken robot system training held by us and suppliers and should conform to all national and local codes.

CAUTION	■ The robot system must be installed to avoid interference with buildings, structures, utilities, other machines and equipment that may create a trapping hazard or pinch points. ■ Oscillation (resonance) may occur during operation depending on rigidity of the installation table. If the oscillation occurs, improve rigidity of the table or change the speed or acceleration and deceleration settings.

The following sections describe the installation of the Standard Manipulator.

3.5.1 Table Top Mounting

3.5.2 Multiple Mounting

For Cleanroom-model manipulator, refer to this section;

3.5.3 Cleanroom-model

3.5.1 Table Top Mounting

CAUTION	■ Install the Table Top Mounting Manipulator with two or more people. The Manipulator weights are as follows. Be careful not to get hands, fingers, or feet caught and/or have equipment damaged by a fall of the Manipulator. G3-251* : approx. 14 kg: 31 lb. G3-301* : approx. 14 kg: 31 lb. G3-351* : approx. 14 kg: 31 lb.

Standard-model

(1) Secure the base to the base table with four bolts.

NOTE

Use bolts with specifications conforming to ISO898-1 Property Class: 10.9 or 12.9.

Tightening torque:
32.0 N·m (326 kgf·cm)

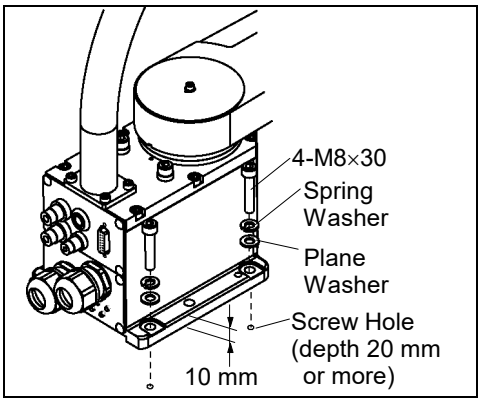

(2) Using nippers, cut off the wire tie binding the shaft and arm retaining bracket on the base.

(3) Remove the bolts securing the wire ties removed in step (2).

(4) Remove the fixing jig for transport.

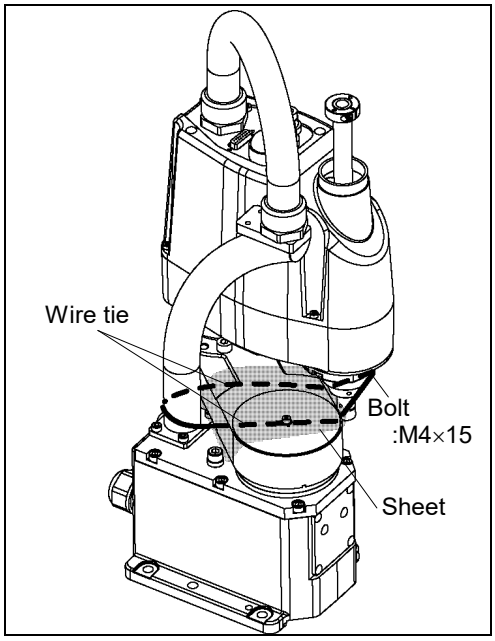

3.5.2 Multiple Mounting

WARNING	■ Install the Multiple Mounting Manipulator with two or more people. The Manipulator weights are as follows. Be careful not to get hands, fingers, or feet caught and/or have equipment damaged by a fall of the Manipulator. G3-301*M : approx. 14 kg: 31 lb. G3-351*M : approx. 14 kg: 31 lb. ■ When installing the Manipulator to the wall, support the Manipulator, and then secure the anchor bolts. Removing the support without securing the anchor bolts properly is extremely hazardous and may result in fall of the Manipulator.

NOTE

Design and make the base table for anchoring the Multiple Mounting Manipulators so that it does not touch any cable connected to the base connector plate and duct.

The recommended installation patterns are as follows:

Side	Ceiling
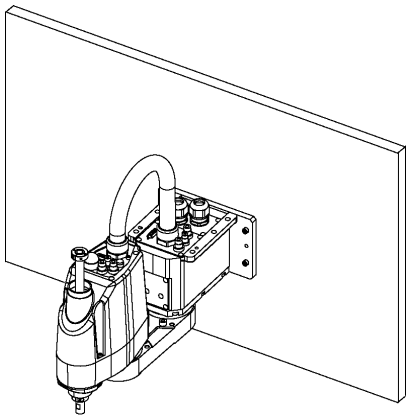	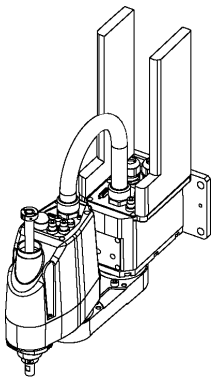

Standard-model

(1) Unpack the manipulator with retaining the arm posture.

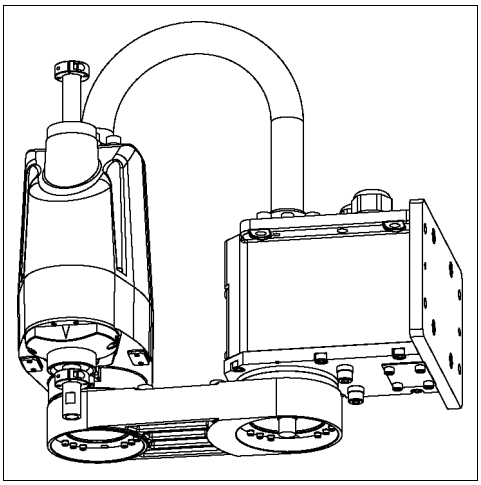

(2) Secure the base to the wall with four bolts.

NOTE

Use bolts with specifications conforming to ISO898-1 Property Class: 10.9 or 12.9.

Tightening torque:
32.0 N·m (326 kgf·cm)

(3) Remove the fixing jig for transport.

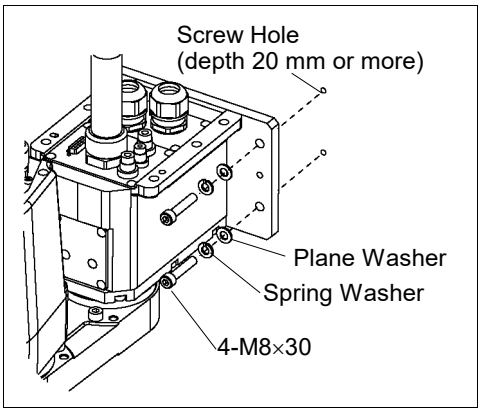

3.5.3 Cleanroom-model

(1) Unpack it outside of the clean room.

(2) Secure the Manipulator to delivery equipment such as a pallet with bolts so that the Manipulator does not fall.

(3) Wipe off the dust on the Manipulator with a little alcohol or distilled water on a lint-free cloth.

(4) Carry the Manipulator in the clean room.

(5) Refer to the installation procedure of each Manipulator model and install the Manipulator.

(6) Connect an exhaust tube to the exhaust port.

CAUTION	■ When operating the Manipulator under special environmental conditions (adverse conditions with dust and oily smoke), do not place the controller in the same condition since the controller does not comply with IP54 / IP65. Doing so may cause equipment damage to and/or malfunction of the controller.

3.6 Connecting the Cables

WARNING	■ To shut off power to the robot system, disconnect the power plug from the power source. Be sure to connect the AC power cable to a power receptacle. DO NOT connect it directly to a factory power source. ■ Before performing any replacement procedure, turn OFF the Controller and related equipment, and then disconnect the power plug from the power source. Performing any replacement procedure with the power ON is extremely hazardous and may result in electric shock and/or malfunction of the robot system. ■ Be sure to connect the cables properly. Do not allow unnecessary strain on the cables. (Do not put heavy objects on the cables. Do not bend or pull the cables forcibly.) The unnecessary strain on the cables may result in damage to the cables, disconnection, and/or contact failure. Damaged cables, disconnection, or contact failure is extremely hazardous and may result in electric shock and/or improper function of the robot system. ■ Grounding the manipulator is done by connecting with the controller. Ensure that the controller is grounded and the cables are correctly connected. If the ground wire is improperly connected to ground, it may result in the fire or electric shock.

CAUTION	■ When connecting the Manipulator to the Controller, make sure that the serial numbers on each equipment match. Improper connection between the Manipulator and Controller may not only cause improper function of the robot system but also serious safety problems. The connection method varies with the Controller used. For details on the connection, refer to the *Controller manual*. If the G series Manipulator is connected to the Controller for the 6-axis robot, it may result in malfunction of the Manipulator.

When the Manipulator is a Cleanroom-model, be aware of the followings.

For the Manipulator of Cleanroom-model, use it with an exhaust system.

For details, refer to *Appendix A:Specifications.*

CAUTION	■ When operating the Manipulator under special environmental conditions (adverse conditions with dust and oily smoke), do not place the controller in the same condition since the controller does not comply with IP54 / IP65. Doing so may cause equipment damage to and/or malfunction of the controller.

Cable Connections

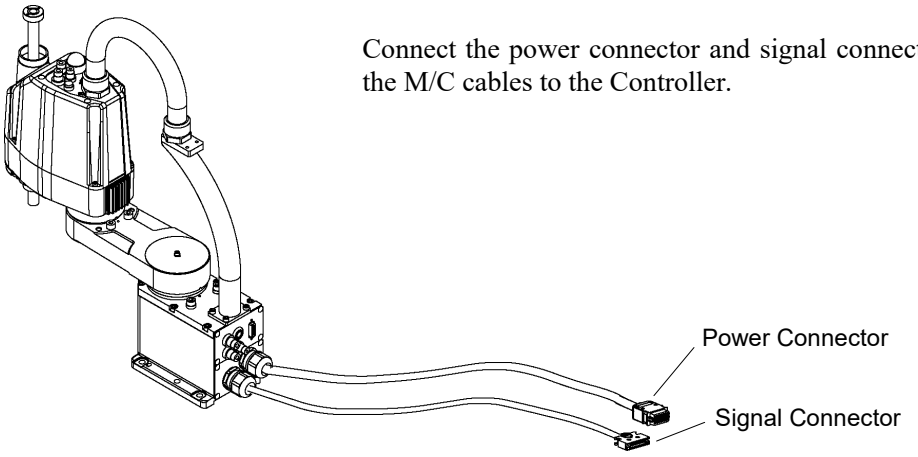

3.7 User Wires and Pneumatic Tubes

CAUTION	■ Only authorized or certified personnel should be allowed to perform wiring. Wiring by unauthorized or uncertified personnel may result in bodily injury and/or malfunction of the robot system.

User electrical wires and pneumatic tubes are contained in the cable unit.

Electrical Wires

Rated Voltage	Allowable Current	Wires	Nominal Sectional Area	Note
AC/DC30 V	1 A	15	0.211 mm^2	Twist pair

		Maker	Standard	
15 pin	Suitable Connector	JAE	DA-15PF-N	(Solder type)
	Clamp Hood	JAE	DA-C8-J10-F2-1R	(Connector setscrew: #4-40 NC)

Pins with the same number, indicated on the connectors on both ends of the cables, are connected.

Pneumatic Tubes

Max. Usable Pneumatic Pressure	Pneumatic Tubes	Outer Diameter × Inner Diameter
0.59 MPa (6 kgf/cm^2 : 86 psi)	2	ø6 mm × ø4 mm
	1	ø4 mm × ø2.5 mm

Fittings for ø6 mm and ø4 mm (outer diameter) pneumatic tubes are supplied on both ends of the pneumatic tubes.

* Color differs depending on the shipment time

Common Parts

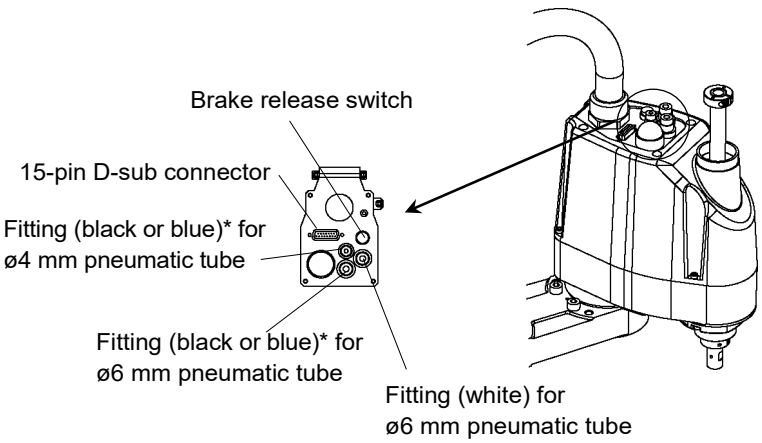

Table Top Mounting

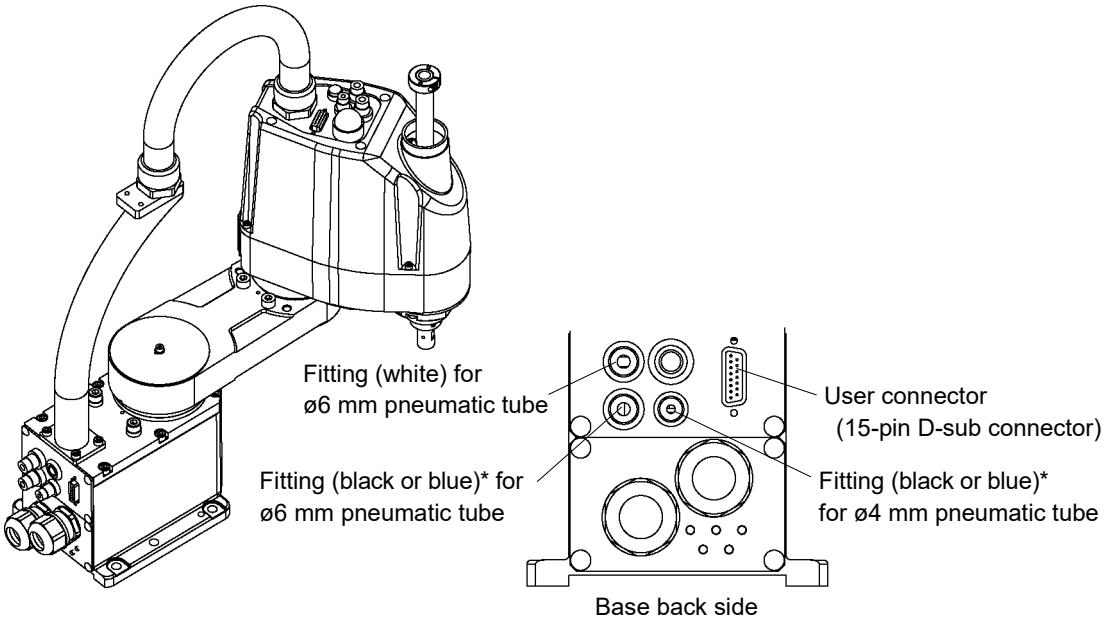

Multiple Mounting

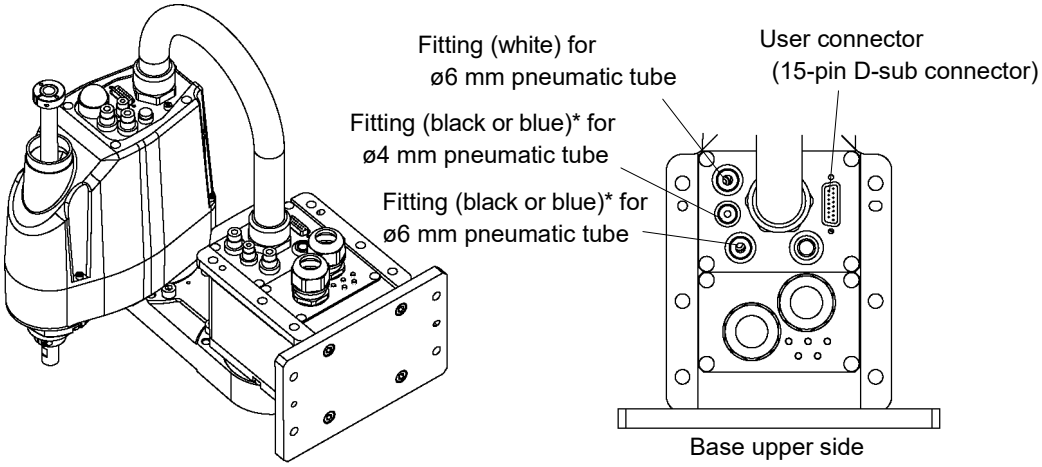

3.8 Relocation and Storage

3.8.1 Precautions for Relocation and Storage

Observe the following when relocating, storing, and transporting the Manipulators.

The installation shall be made by personnel who has taken robot system training held by us and suppliers and should conform to all national and local codes.

WARNING	■ Only authorized personnel should perform sling work and operate a crane and a forklift. When these operations are performed by unauthorized personnel, it is extremely hazardous and may result in serious bodily injury and/or severe equipment damage to the robot system.

CAUTION	■ Before relocating the Manipulator, fold the arm and secure it tightly with a wire tie to prevent hands or fingers from being caught in the Manipulator. ■ When removing the anchor bolts, support the Manipulator to prevent falling. Removing the anchor bolts without support may result in a fall of the Manipulator, and then get hands, fingers, or feet caught. ■ To carry the Manipulator, have two or more people to work on it and secure the Manipulator to the delivery equipment or hold the bottom of Arm #1, the bottom of the main cable fitting, and the bottom of the base by hand. When holding the bottom of the base by hand, be very careful not to get hands or fingers caught. ■ Stabilize the Manipulator with your hands when hoisting it. Unstable hoisting is extremely hazardous and may result in fall of the Manipulator.

When transporting the Manipulator for a long distance, secure it to the delivery equipment so that the Manipulator cannot fall.
If necessary, pack the Manipulator in the same way as it was delivered.

When the Manipulator is used for a robot system again after long-term storage, perform a test run to verify that it works properly, and then operate it thoroughly.

Transport and store the Manipulator in the range of Temperature: -20 to +60°C, Humidity: 10 to 90% (no condensation).

When condensation occurs on the Manipulator during transport or storage, turn ON the power only after the condensation dries.

Do not shock or shake the Manipulator during transport.

3.8.2 Table Top Mounting

CAUTION	■ Install or relocate the Table Top Mounting Manipulator with two or more people. The Manipulator weights are as follows. Be careful not to get hands, fingers, or feet caught and/or have equipment damaged by a fall of the Manipulator. G3-251* : approx. 14 kg: 31 lb. G3-301* : approx. 14 kg: 31 lb. G3-351* : approx. 14 kg: 31 lb.

(1) Turn OFF the power on all devices and unplug the cables.

NOTE

Remove the mechanical stops if using them to limit the motion range of Joints #1 and #2. For details on the motion range, refer to *5.2 Motion Range Setting by Mechanical Stops*.

(2) Cover the arm with a sheet so that the arm will not be damaged.
Tie the lower end of the shaft and arm, and the base and arm together with the wire tie.
Be careful not to tie them too tight. Otherwise, the shaft may bend.

Example of Arm Retaining Posture

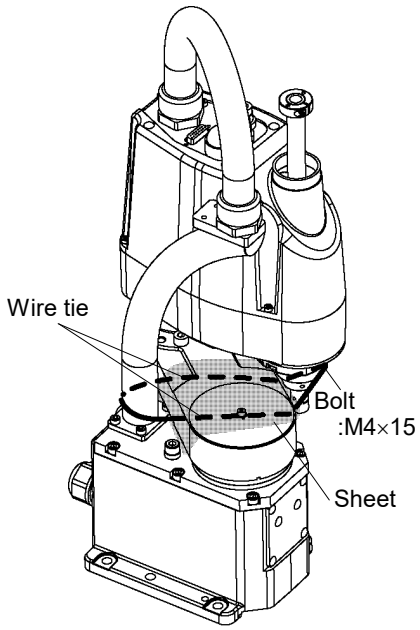

(3) Hold the bottom of Arm #1 by hand to unscrew the anchor bolts. Then, remove the Manipulator from the base table.

G3-251*

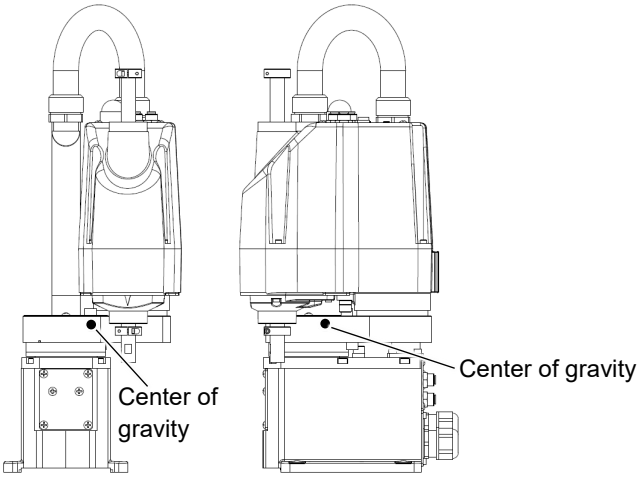

G3-301*

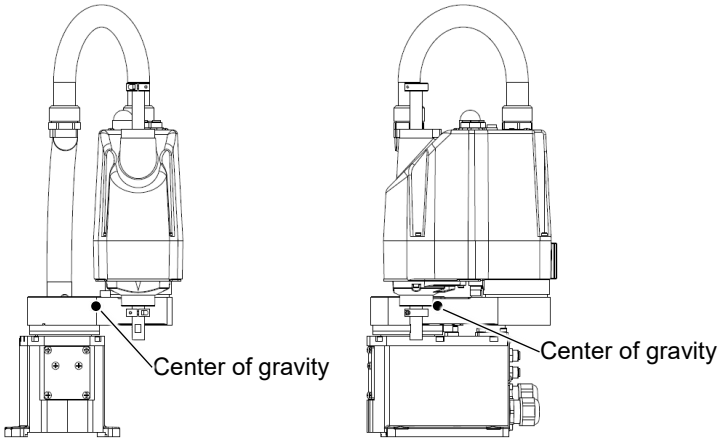

G3-351*

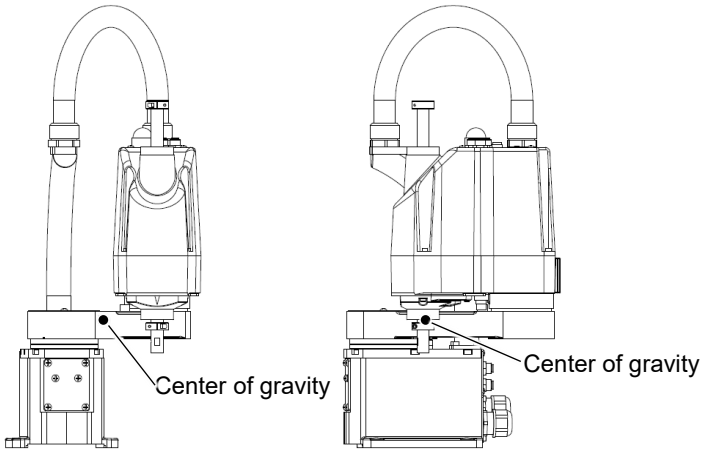

3.8.3 Multiple Mounting

WARNING	■ Install or relocate the Multiple Mounting Manipulator with two or more people. The Manipulator weights are as follows. Be careful not to get hands, fingers, or feet caught and/or have equipment damaged by a fall of the Manipulator. G3-301*M : approx. 14 kg: 31 lb. G3-351*M : approx. 14 kg: 31 lb. ■ When removing the Manipulator from the wall, support the Manipulator, and then remove the anchor bolts. Removing the anchor bolts without supporting is extremely hazardous and may result in fall of the Manipulator.

(1) Turn OFF the power on all devices and unplug the cables.

NOTE

Remove the mechanical stops if using them to limit the motion range of Joints #1 and #2. For details on the motion range, refer to *5.2 Motion Range Setting by Mechanical Stops*.

(2) Cover the arm with a sheet so that the arm will not be damaged.
Refer to the figure below and bind the shaft and arm retaining bracket on the base.

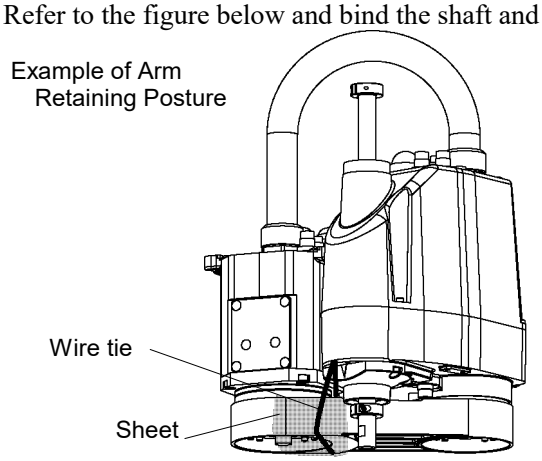

(3) Hold the bottom of Arm #1 by hand to unscrew the anchor bolts. Then, remove the Manipulator from the wall.

G3-301*M

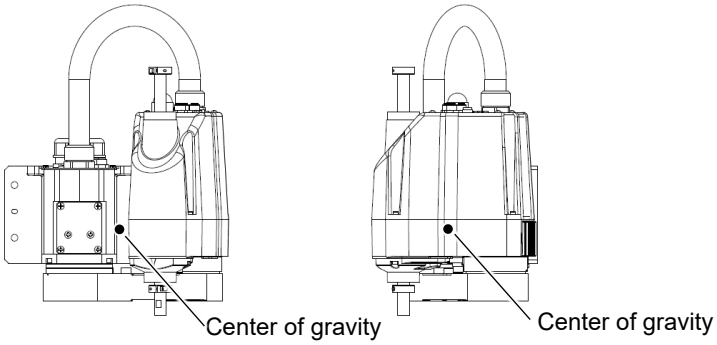

G3-351*M

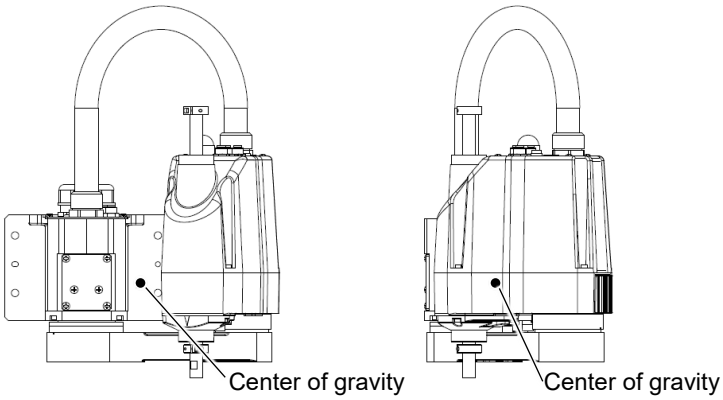

4. Setting of End Effectors

4.1 Attaching an End Effector

Users are responsible for making their own end effector(s). Before attaching an end effector, observe these guidelines. For details of attaching an end effector, *Hand Function Manual.*

CAUTION	■ If you use an end effector equipped with a gripper or chuck, connect wires and/or pneumatic tubes properly so that the gripper does not release the work piece when the power to the robot system is turned OFF. Improper connection of the wires and/or pneumatic tubes may damage the robot system and/or work piece as the work piece is released when the Emergency Stop switch is pressed. I/O outputs are configured at the factory so that they are automatically shut off (0) by power disconnection, the Emergency Stop switch, or the safety features of the robot system. However, the I/O set in the hand function does not turn off (0) when the Reset command is executed or in emergency stop.

Shaft

- Attach an end effector to the lower end of the shaft.
  For the shaft dimensions, and the overall dimensions of the Manipulator, refer to *2. Specifications*.
- Do not move the upper limit mechanical stop on the lower side of the shaft. Otherwise, when "Jump motion" is performed, the upper limit mechanical stop may hit the Manipul ator, and the robot system may not function properly.
- Use a split muff coupling with an M4 bolt or larger to attach the end effector to the shaft.

Brake release switch

- Joint #3 cannot be moved up/down by hand because the electromagnetic brake is applied to the joint while power to the robot system is turned OFF.

  This prevents the shaft from hitting peripheral equipment in the case that the shaft is lowered by the weight of the end effector when the power is disconnected during operation, or when the motor is turned OFF even though the power is turned ON.

  To move Joint #3 up/down while attaching an end effector, turn ON the Controller and press the brake release switch.

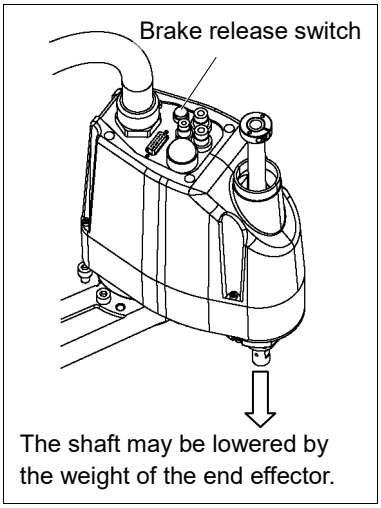

  This button switch is a momentary-type; the brake is released only while the button switch is being pressed.
- Be careful of the shaft while the brake release switch is being pressed because the shaft may be lowered by the weight of the end effector.

Layouts

- When you operate the manipulator with an end effector, the end effector may interfere with the Manipulator because of the outer diameter of the end effector, the size of the work piece, or the position of the arms. When designing your system layout, pay attention to the interference area of the end effector.

4.2 Attaching Cameras and Valves

Arm #2 has threaded holes as shown in the figure below. Use these holes for attaching cameras, valves, and other equipment. [Unit: mm]

Common Dimensions

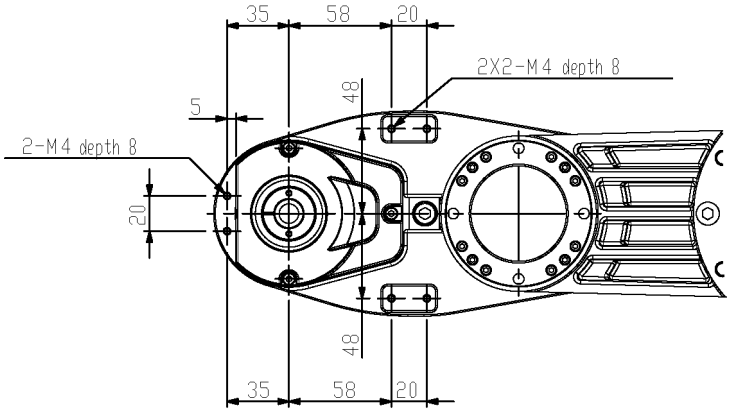

Table Top Mounting

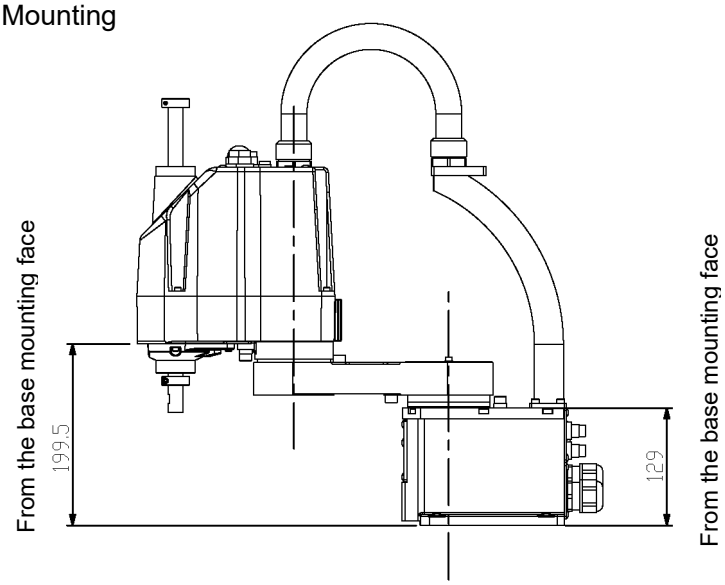

Multiple Mounting

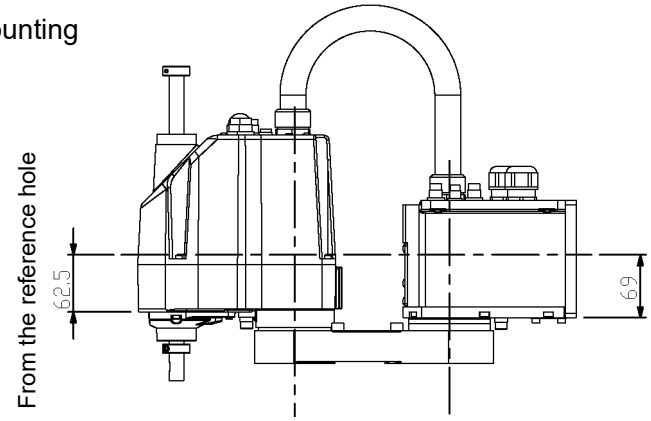

4.3 Weight and Inertia Settings

To ensure optimum Manipulator performance, it is important to make sure that the load (weight of the end effector and work piece) and moment of inertia of the load are within the maximum rating for the Manipulator, and that Joint #4 does not become eccentric.
If the load or moment of inertia exceeds the rating or if the load becomes eccentric, follow the steps below, "*4.3.1Weight Setting"* and "*4.3.2 Inertia Setting"* to set parameters.
Setting parameters makes the PTP motion of the Manipulator optimal, reduces vibration to shorten the operating time, and improves the capacity for larger loads. In addition, it reduces persistent vibration produced when the moment of inertia of the end effector and work piece is larger than the default setting.

4.3.1 Weight Setting

CAUTION	■ The total weight of the end effector and the work piece must not exceed 3 kg. The G3 series Manipulators are not designed to work with loads exceeding 3 kg. Always set the Weight parameters according to the load. Setting a value that is smaller than the actual load may cause errors, excessive shock, insufficient function of the Manipulator, and/or shorten the life cycle of parts/mechanisms.

The acceptable weight capacity (end effector and work piece) in G3 series is 1 kg at the default rating and 3 kg at the maximum. When the load (weight of the end effector and work piece) exceeds the rating, change the setting of Weight parameter.
After the setting is changed, the maximum acceleration/deceleration speed of the robot system at PTP motion corresponding to the "Weight Parameter" is set automatically.

Load on the Shaft

The load (weight of the end effector and work piece) on the shaft can be set by Weight parameter.

EPSON RC+

Enter a value into the [Weight:] text box on the [Weight] panel ([Tools] - [Robot Manager]). (You may also execute the Weight command from the [Command Window].)

Load on the Arm

When you attach a camera or other devices to the arm, calculate the weight as the equivalent of the shaft. Then, add this to the load and enter the total weight to the Weight parameter.

Equivalent Weight Formula

When you attach the equipment near Arm #2: $W_M = M (L_1)^2/(L_1+L_2)^2$
When you attach the equipment to the end of Arm #2: $W_M = M (L_M)^2/(L_2)^2$

W_M : equivalent weight
M : weight of camera etc.
L_1 : length of Arm #1
L_2 : length of Arm #2
L_M : distance from rotation center of Joint #2 to center of gravity of camera etc.

<Example> A “1 kg” camera is attached to the end of the G3 series arm (180 mm away from the rotation center of Joint #2) with a load weight of “1 kg”.

$M=1$

$L_2=130$

$L_M=180$

$W_M=1\times180^2/130^2=1.917 \Rightarrow 2$ (round up)

$W+W_M=1+2=3$

Enter “3” for the Weight Parameter.

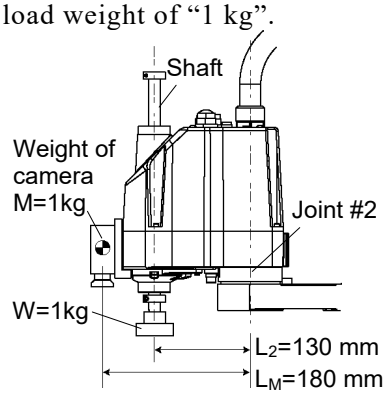

Automatic speed setting by Weight

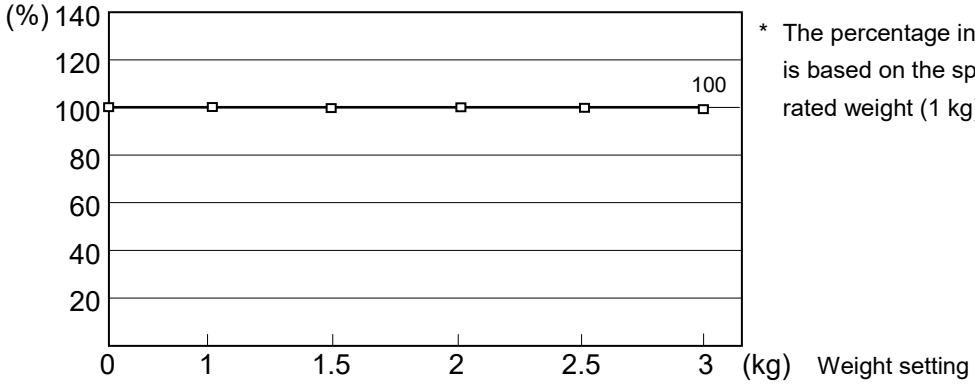

* The percentage in the graph is based on the speed at rated weight (1 kg) as 100%.

Automatic acceleration/deceleration setting by Weight

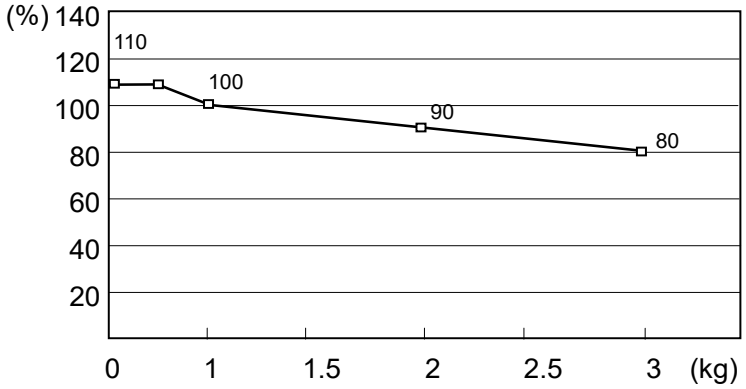

* The percentage in the graph is based on the acceleration / deceleration at rated weight (1 kg) as 100%.

G3-25***

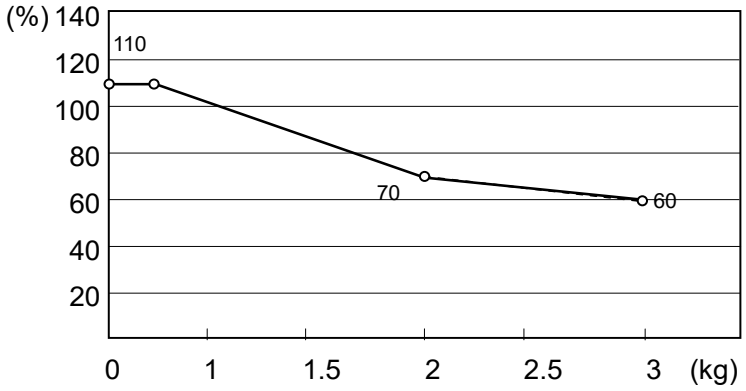

* The percentage in the graph is based on the acceleration / deceleration at rated weight (1 kg) as 100%.

G3-30***

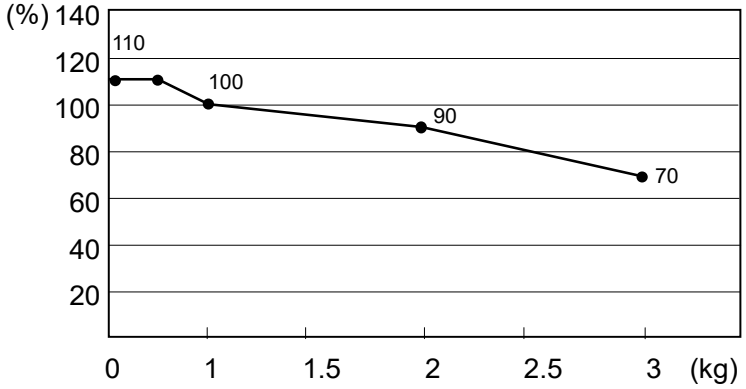

* The percentage in the graph is based on the acceleration / deceleration at rated weight (1 kg) as 100%.

G3-35***

4.3.2 Inertia Setting

Moment of Inertia and the Inertia Setting

The moment of inertia is defined as "the ratio of the torque applied to a rigid body and its resistance to motion". This value is typically referred to as "the moment of inertia", "inertia", or "GD^2". When the Manipulator operates with additional objects (such as an end effector) attached to the shaft, the moment of inertia of load must be considered.

CAUTION	■ The moment of inertia of the load (weight of the end effector and work piece) must be 0.05 kg·m^2 or less. The G3 series Manipulators are not designed to work with a moment of inertia exceeding 0.05 kg·m^2. Always set the moment of inertia parameter to the correct moment of inertia. Setting a value that is smaller than the actual moment of inertia may cause errors, excessive shock, insufficient function of the Manipulator, and/or shorten the life cycle of parts/mechanisms.

The acceptable moment of inertia of load for a G3 series Manipulator is 0.005 kg·m^2 at the default rating and 0.05 kg·m^2 at the maximum. When the moment of inertia of the load exceeds the rating, change the setting of the moment of inertia parameter of the Inertia command. After the setting is changed, the maximum acceleration/deceleration speed of Joint #4 at PTP motion corresponding to the "moment of inertia" value is set automatically.

Moment of inertia of load on the shaft

The moment of inertia of load (weight of the end effector and work piece) on the shaft can be set by the "moment of inertia" parameter of the Inertia command.

EPSON RC+

Enter a value into the [Load inertia:] text box on the [Inertia] panel ([Tools]-[Robot Manager]). (You may also execute the Inertia command from the [Command Window].)

Automatic acceleration/deceleration setting of Joint #4 by Inertia (moment of inertia)

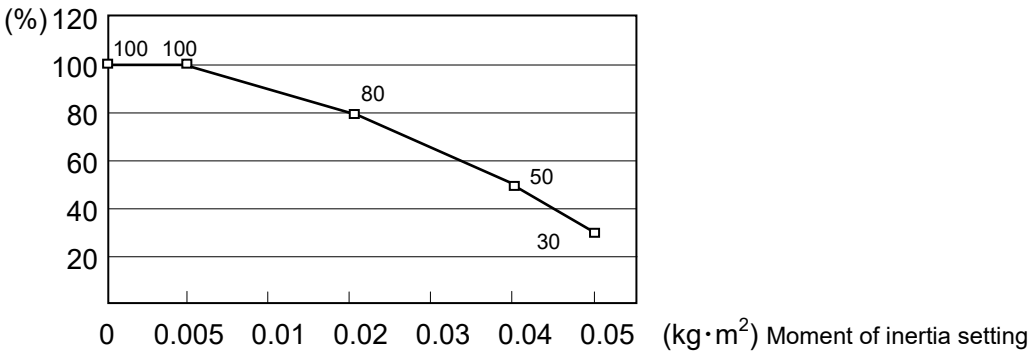

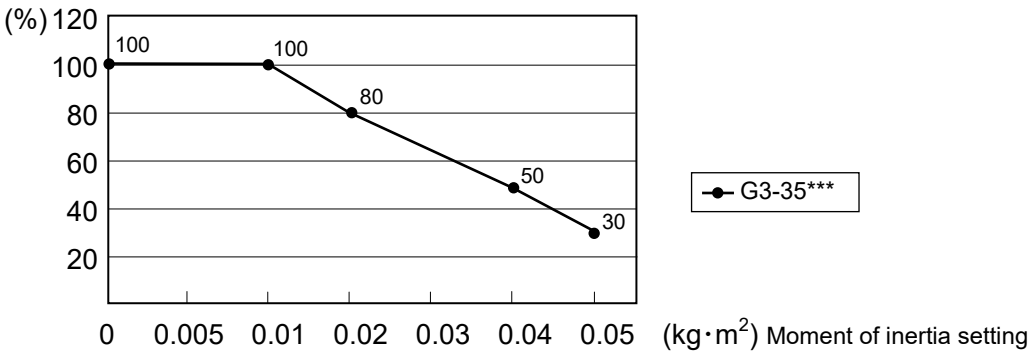

Eccentric Quantity and the Inertia Setting

CAUTION	■ The eccentric quantity of load (weight of the end effector and work piece) must be 150 mm or less. The G3 series Manipulators are not designed to work with eccentric quantity exceeding 150 mm. Always set the eccentric quantity parameter according to the eccentric quantity. Setting a value that is smaller than the actual eccentric quantity may cause errors, excessive shock, insufficient function of the Manipulator, and/or shorten the life cycle of parts/mechanisms.

The acceptable eccentric quantity of load in G3 series is 0 mm at the default rating and 150 mm at the maximum. When the eccentric quantity of load exceeds the rating, change the setting of eccentric quantity parameter of Inertia command. After the setting is changed, the maximum acceleration/deceleration speed of the Manipulator at PTP motion corresponding to the "eccentric quantity" is set automatically.

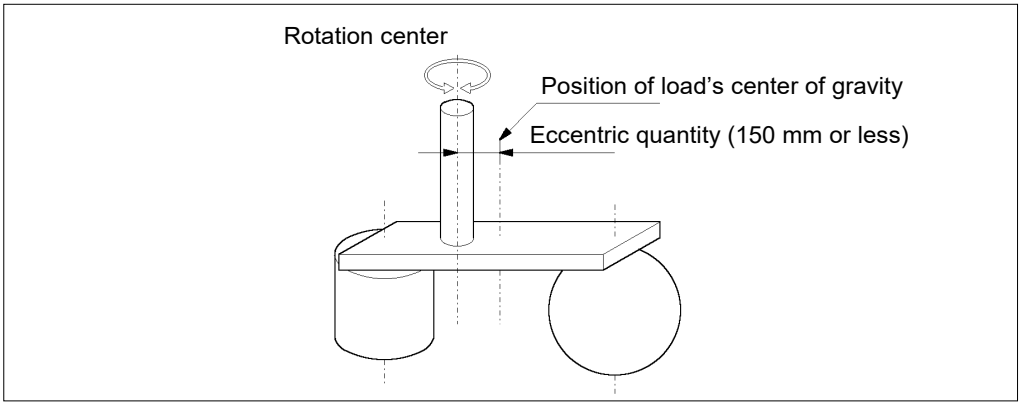

Eccentric Quantity

Eccentric quantity of load on the shaft

The eccentric quantity of load (weight of the end effector and work piece) on the shaft can be set by "eccentric quantity" parameter of Inertia command.

EPSON RC+

Enter a value into the [Eccentricity:] text box on the [Inertia] panel ([Tools] - [Robot Manager]). (You may also execute the Inertia command from the [Command Window].)

Automatic acceleration/deceleration setting by Inertia (eccentric quantity)

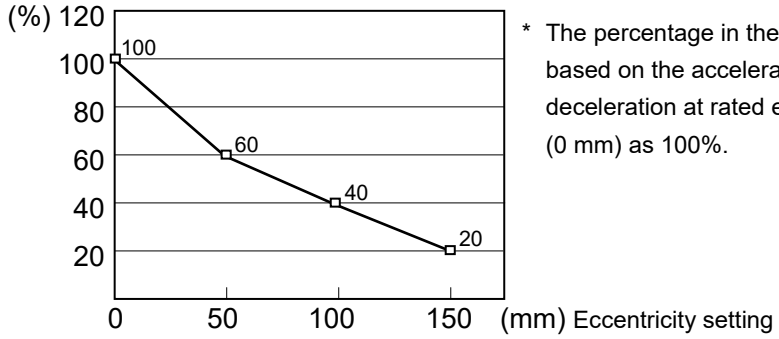

* The percentage in the graph is based on the acceleration / deceleration at rated eccentricity (0 mm) as 100%.

Calculating the Moment of Inertia

Refer to the following examples of formulas to calculate the moment of inertia of load (end effector with work piece).

The moment of inertia of the entire load is calculated by the sum of each part (a), (b), and (c).

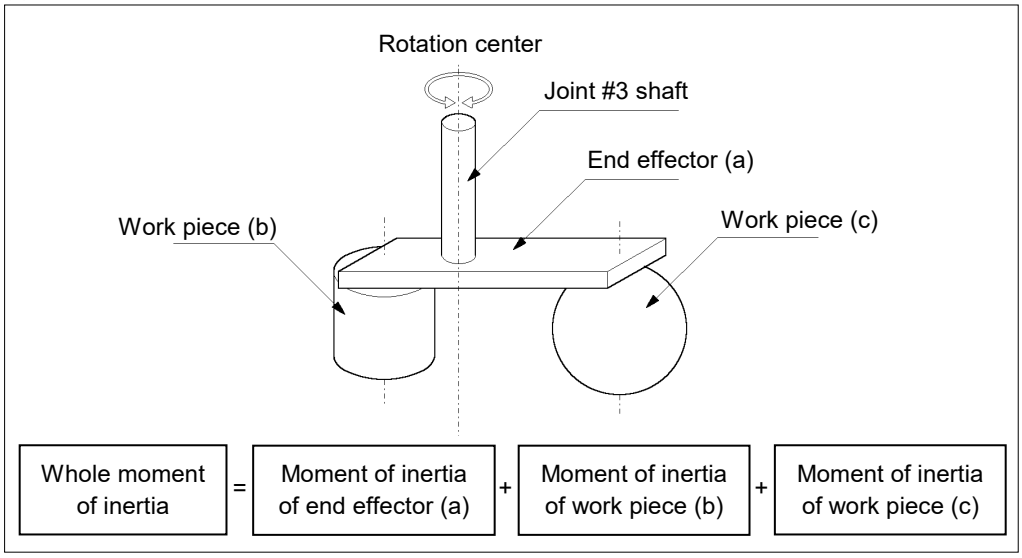

The methods for calculating the moment of inertia for (a), (b), and (c) are shown below. Calculate the total moment of inertia using the basic formulas.

(a) Moment of inertia of a rectangular parallelepiped

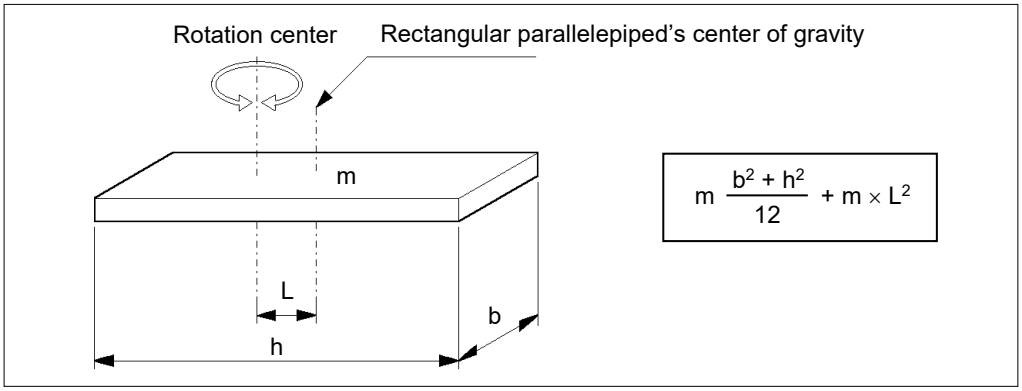

(b) Moment of inertia of a cylinder

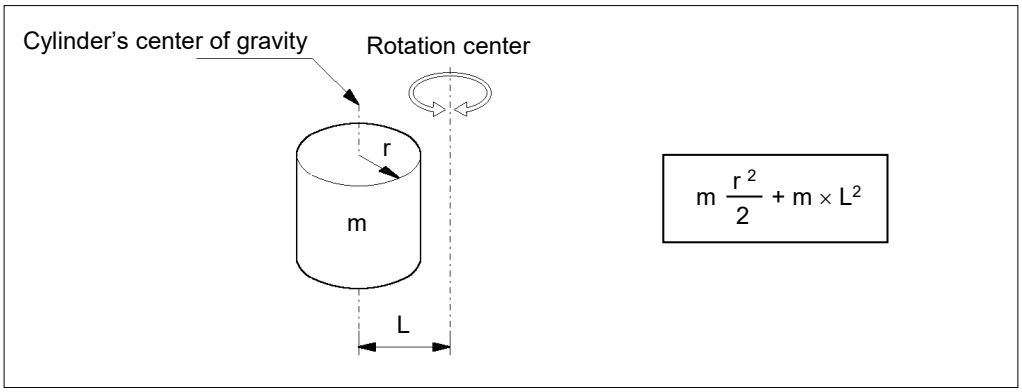

(c) Moment of inertia of a sphere

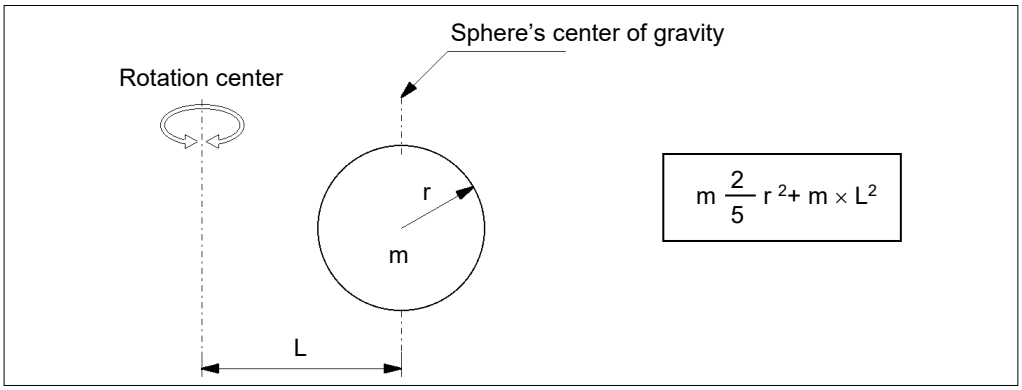

4.4 Precautions for Auto Acceleration/Deceleration of Joint #3

When you move the Manipulator in horizontal PTP motion with Joint #3 (Z) at a high position, the motion time will be faster.

When Joint #3 gets below a certain point, then auto acceleration/deceleration is used to reduce acceleration/deceleration. (Refer to the figure below.) The higher the position of the shaft is, the faster the motion acceleration/deceleration is. However, it takes more time to move Joint #3 up and down. Adjust the position of Joint #3 for the Manipulator motion after considering the relation between the current position and the destination position.

The upper limit of Joint #3 during horizontal motion using Jump command can be set by the LimZ command.

Automatic acceleration/deceleration vs. Joint #3 position

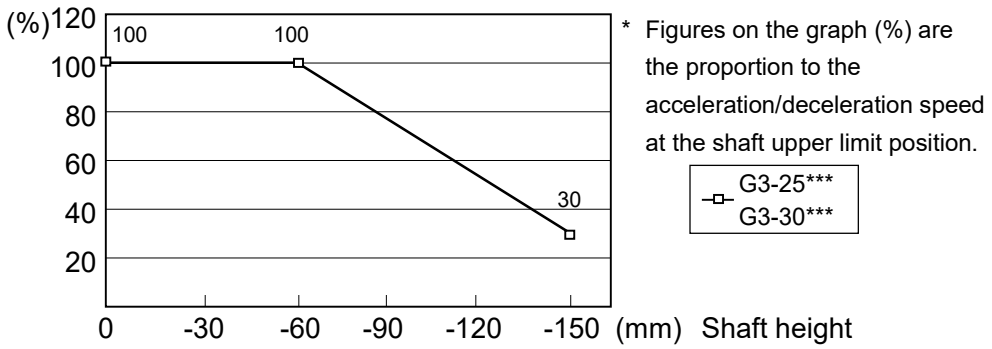

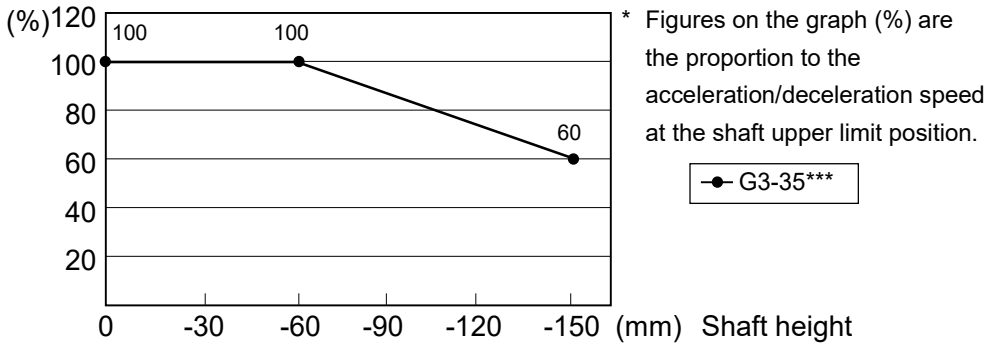

NOTE ☞ When moving the Manipulator horizontally while the shaft is being lowered, it may cause over-shoot at the time of final positioning.

5. Motion Range

CAUTION	■ When setting up the motion range for safety, both the pulse range and mechanical stops must always be set at the same time.

The motion range is preset at the factory as explained in *5.4 Standard Motion Range*. That is the maximum motion range of the Manipulator.

There are three methods for setting the motion range described as follows:

1. Setting by pulse range (for all joints)
2. Setting by mechanical stops (for Joints #1 to #3)
3. Setting the Cartesian (rectangular) range in the X, Y coordinate system of the Manipulator (for Joints #1 and #2)

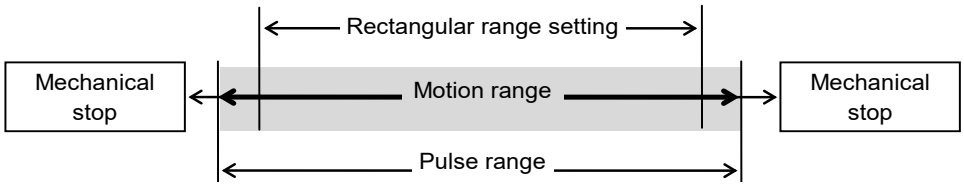

When the motion range is changed due to layout efficiency or safety, follow the descriptions in *5.1* to *5.3* to set the range.

5.1 Motion Range Setting by Pulse Range (for All Joints)

Pulses are the basic unit of Manipulator motion. The motion range of the Manipulator is controlled by the pulse range between the pulse lower limit and upper limit of each joint. Pulse values are read from the encoder output of the servo motor.

For the maximum pulse range, refer to the following sections.
The pulse range must be set inside of the mechanical stop range.

5.1.1 Max. Pulse Range of Joint #1
5.1.2 Max. Pulse Range of Joint #2
5.1.3 Max. Pulse Range of Joint #3
5.1.4 Max. Pulse Range of Joint #4.

NOTE

Once the Manipulator receives an operating command, it checks whether the target position specified by the command is within the pulse range before operating. If the target position is out of the set pulse range, an error occurs and the Manipulator does not move.

EPSON RC+

The pulse range can be set on the [Range] panel shown by selecting [Tools]-[Robot Manager]. (You may also execute the Range command from the [Command Window].)

5.1.1 Max. Pulse Range of Joint #1

The 0 (zero) pulse position of Joint #1 is the position where Arm #1 faces toward the positive (+) direction on the X-coordinate axis.

When the 0 pulse is a starting point, the counterclockwise pulse value is defined as the positive (+) and the clockwise pulse value is defined as the negative (−).

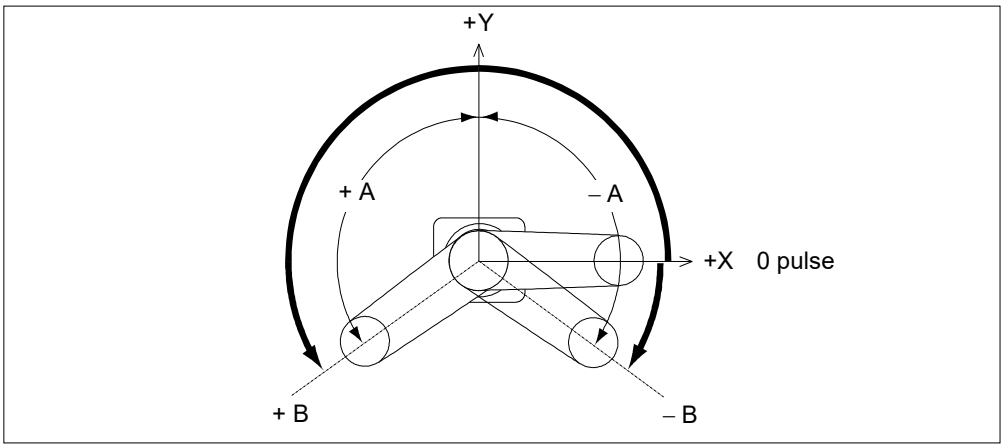

Table Top Mounting

	Arm	Standard	-R	-L
A Max. Motion Range (deg)	25	±140	–	–
	30		–125 to 150	–150 to 125
	35		–110 to 165	–165 to 110
B Max. Pulse Range (pulse)	25	–1456356 to 6699236	–	–
	30		–1019449 to 6990507	–1747627 to 6262329
	35		–582543 to 7427414	–2184534 to 5825423

Multiple Mounting

	Arm	Standard	-R	-L
A Max. Motion Range (deg)	30	±115	–	–
	35	±120	–105 to 130	–130 to 105
B Max. Pulse Range (pulse)	30	–728178 to 5971058	–	–
	35	–873814 to 6116694	–436907 to 6407965	–1165085 to 5679787

5.1.2 Max. Pulse Range of Joint #2

The 0 (zero) pulse position of Joint #2 is the position where Arm #2 is in-line with Arm #1. With the 0 pulse as a starting point, the counterclockwise pulse value is defined as the positive (+) and the clockwise pulse value is defined as the negative (−).

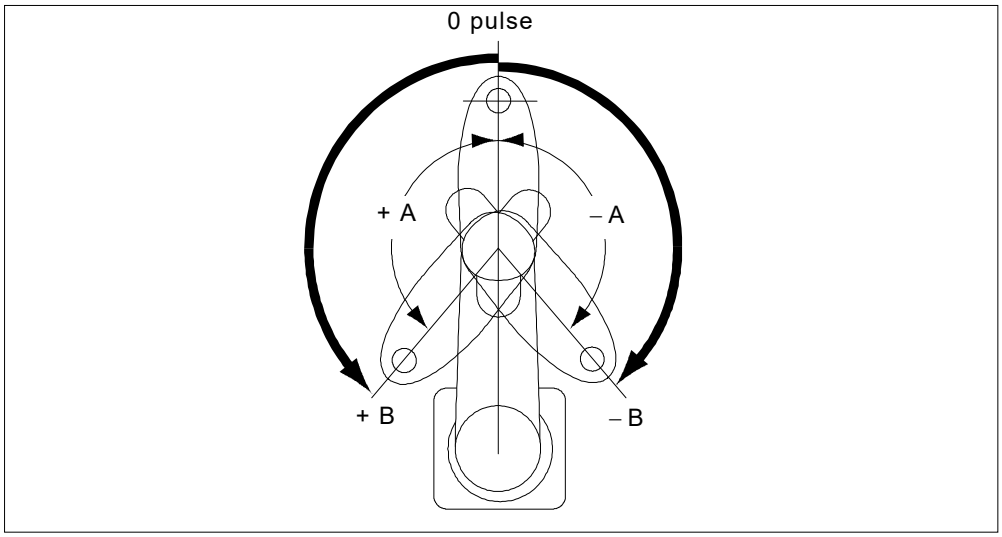

Table Top Mounting (S: Standard-model, C: Cleanroom-model)

	Arm	Standard	-R	-L
A Max. Motion Range (deg)	25	S: ±141 C: ±137	–	–
	30	S: ±142 C: ±141	S: –135 ~ 150 C: –135 ~ 145	S: –150 to 135 C: –145 to 135
	35	±142	S: –120 ~ 165 C: –120 ~ 160	S: –165 to 120 C: –160 to 120
B Max. Pulse Range (pulse)	25	S: –2566827 to 2566827 C: –2494009 to 2494009	–	–
	30	S: –2585032 to 2585032 C: –2494009 to 2494009	S: –2457600 to 2730667 C: –2457600 to 2639645	S: –2730667 to 2457600 C: –2639645 to 2457600
	35	–2585032 ~ 2585032	S: –2184534 ~ 3003734 C: –2184534 ~ 2912712	S: –3003734 to 2184534 C: –2912712 to 2184534

Table Top Mounting (S: Standard-model, C: Cleanroom-model)

	Arm	Standard	-R	-L
A Max. Motion Range (deg)	30	±135	–	–
	35	±142	S: –120 ~ 160 C: –120 ~ 150	S: –160 ~ 120 C: –150 ~ 120
B Max. Pulse Range (pulse)	30	–2457600 to 2457600	–	–
	35	–2585032 to 2585032	S: –2184534 to 2912712 C: –2184534 to 2730667	S: –2912712 to 2184534 C: –2730667 to 2184534

5.1.3 Max. Pulse Range of Joint #3

The 0 (zero) pulse position of Joint #3 is the position where the shaft is at its upper limit. The pulse value is always negative because Joint #3 always moves lower than the 0 pulse position.

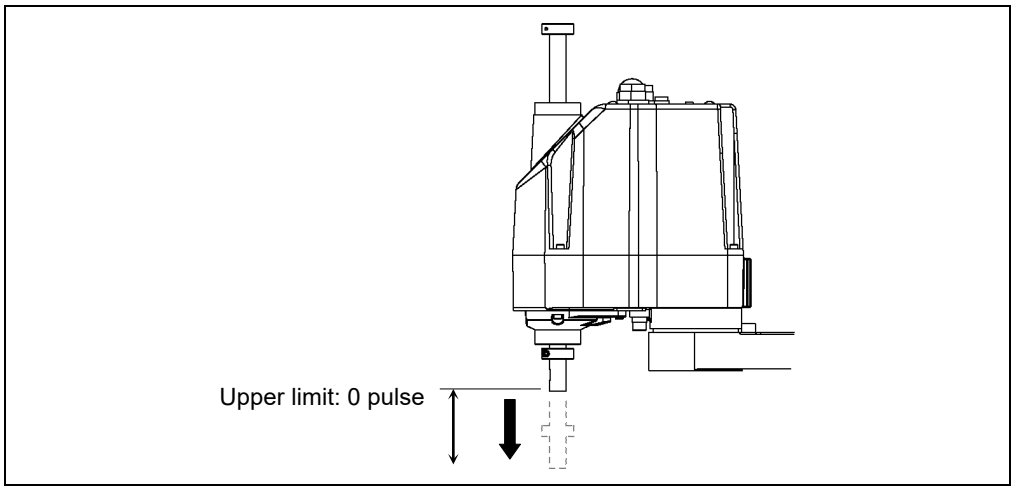

Model	Joint #3 Stroke	Lower Limit Pulse
G3-**1S*	150 mm	−1706667
G3-**1C* (Cleanroom-model)	120 mm	−1365334

NOTE

For the Cleanroom-model (G3-**1C*), the motion range set with the Joint #3 mechanical stop cannot be changed.

5.1.4 Max. Pulse Range of Joint #4

The 0 (zero) pulse position of Joint #4 is the position where the flat near the end of the shaft faces toward the end of Arm #2. With the 0 pulse as a starting point, the counterclockwise pulse value is defined as the positive (+) and the clockwise pulse value is defined as the negative (−).

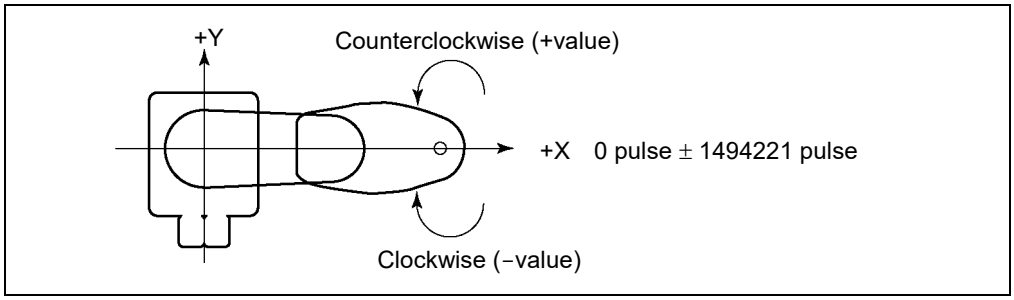

5.2 Motion Range Setting by Mechanical Stops

Mechanical stops physically limit the absolute area that the Manipulator can move.

Both Joints #1 and #2 have threaded holes in the positions corresponding to the angle for the mechanical stop settings. Install the bolts in the holes corresponding to the angle that you want to set.

Joints #3 can be set to any length less than the maximum stroke.

Table Top Mounting

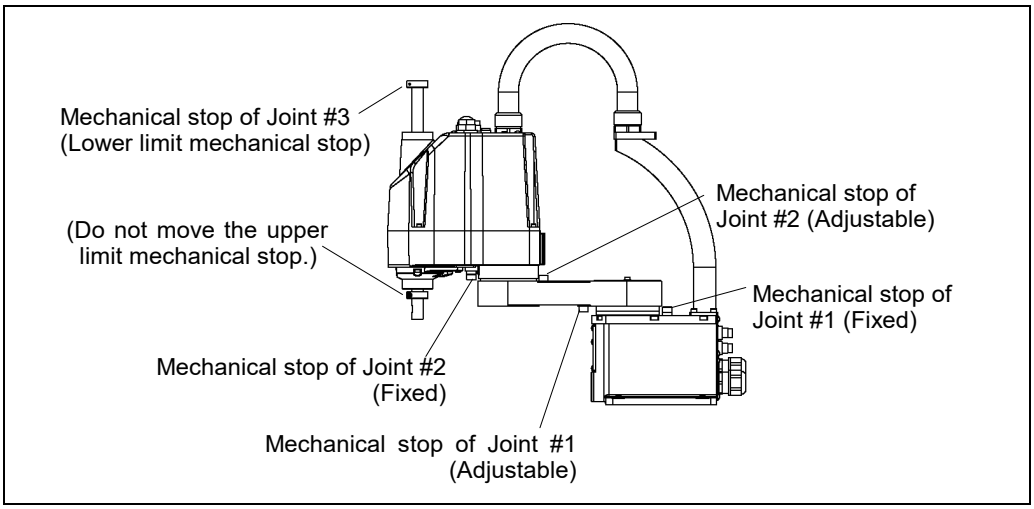

Multiple Mounting

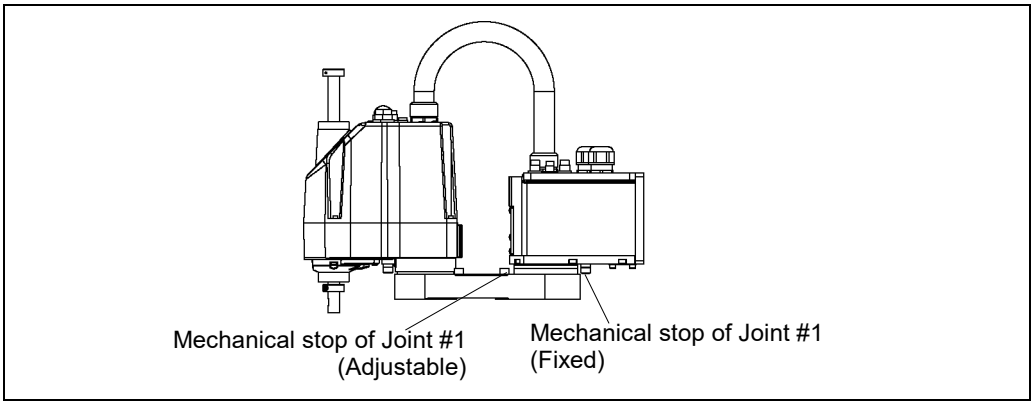

* The different mechanical stop positions from Table Top mounting are indicated for Multiple mounting.

5.2.1 Setting the Mechanical Stops of Joints #1 and #2

Both Joints #1 and #2 have threaded holes in the positions corresponding to the angle for the mechanical stop settings. Install the bolts in the holes corresponding to the angle that you want to set.

Install the bolts for the mechanical stop of Joint #1 (adjustable) to the following position.

Table Top mounting : Arm bottom side

Multiple mounting : Arm top side

Joint #1 Mechanical Stops

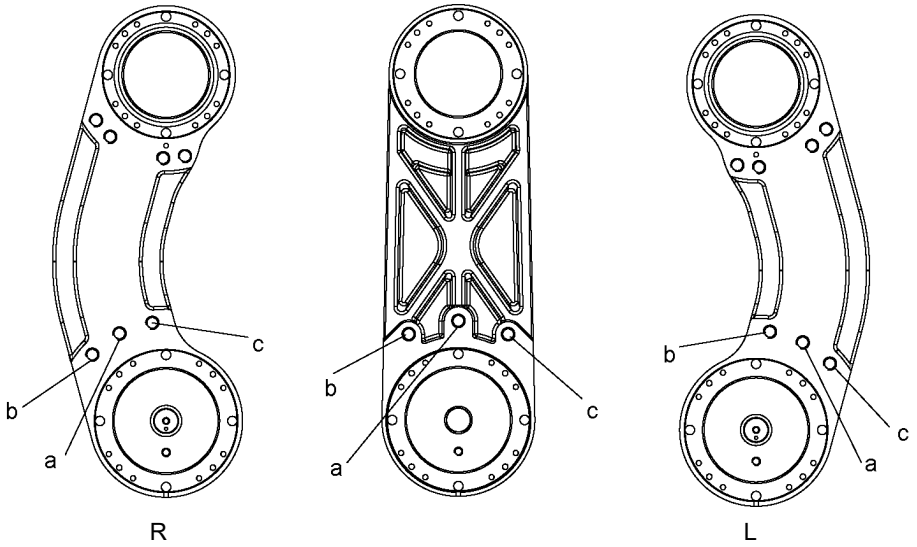

Views from the bottom of Arm #1

Model	Arm	a	b	c
G3-**1S/C	250	±140°	-110°	+110°
	300	±140°	-110°	+110°
	350	±140°	-110°	+110°
G3-**1S/C-R	300	-125° to +150°	-105°	+130°
	350	-110° to +165°	-90°	+145°
G3-**1S/C-L	300	-150° to +125°	-130°	+105°
	350	-165° to +110°	-145°	＋90°
G3-**1SM/CM	300	±115°	-100°	+100°
	350	±120°	-105°	+105°
G3-351SM/CM-R	350	-105° to +130°	-95°	+120°
G3-351SM/CM-L	350	-130° to +105°	-120°	+95°

Setting Angle	+90°	+95°	+100°	+105°	+110°	+115°	+120°
Pulse Value	5242880	5388516	5534151	5679787	5825423	5971058	6116694

Setting Angle	+125°	+130°	+140°	+145°	+150°	+165°
Pulse Value	6262329	6407965	6699236	6844872	6990507	7427414

Setting Angle	-90°	-95°	-100°	-105°	-110°	-115	-120°
Pulse Value	0	-145636	-291271	-436907	-582542	-728178	-873813

Setting Angle	-125°	-130°	-140°	-145°	-150°	+165°
Pulse Value	-1019449	-1165085	-1456356	-1601991	-1747627	-2184533

(°: degree)

Joint #2 Mechanical Stops

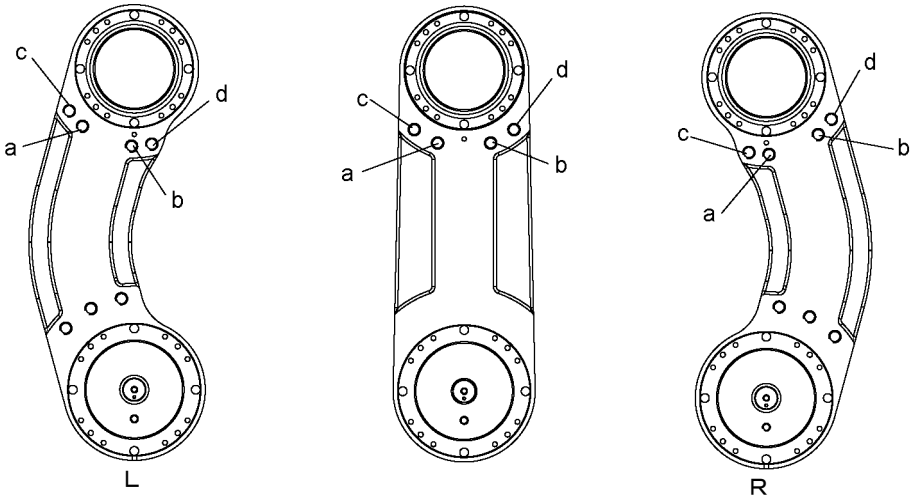

Views from the top of Arm #1

Model	Arm	a	b	c	d
G3-**1S/C	250	+141°	-141°	+120°	-120°
	300	+142°	-142°	+120°	-120°
	350	+142°	-142°	+120°	-120°
G3-**1S/C-R	300	+150°	-135°	+130°	-115°
	350	+165°	-120°	+145°	-100°
G3-**1S/C-L	300	+135°	-150°	+115°	-130°
	350	+120°	-165°	+100°	-145°
G3-**1SM/CM	300	+135°	-135°	+115°	-115°
	350	+142°	-142°	+120°	-120°
G3-351SM/CM-R	350	+160°	-120°	+150°	-110°
G3-351SM/CM-L	350	+120°	-160°	+110°	-150°

Setting Angle	+100°	+110°	+115°	+120°	+130°	+135°
Pulse Value	1820444	2002488	2093511	2184533	2366577	2457600
Setting Angle	+141°	+142°	+145°	+150°	+160°	+165°
Pulse Value	2566826	2585031	2639644	2730666	2912711	3003733
Setting Angle	-100°	-100°	-115°	-120°	-130°	-135°
Pulse Value	-1820444	-2002488	-2093511	-2184533	-2366577	-2457600
Setting Angle	-141°	-142°	-145°	-150°	-160°	-165°
Pulse Value	-2566826	-2585031	-2639644	-2730666	-2912711	-3003733

(°: degree)

NOTE ☞ In case of Multiple Mounting, it is impossible to limit the operating range completely. Because it may hit the wall within the setting range of mechanical stops.

(1) Turn OFF the Controller.

(2) Install a hexagon socket head cap bolt into the hole corresponding to the setting angle, and tighten it.

Joint	Hexagon socket head cap bolt (fully threaded)	The number of bolts	Recommended tightening torque	Strength
1	M8 × 10	1 bolt / one side	37.2 N·m (380 kgf·cm)	ISO898-1 property class: 10.9 or 12.9.

(3) Turn ON the Controller.

(4) Set the pulse range corresponding to the new positions of the mechanical stops.

NOTE

Be sure to set the pulse range inside the positions of the mechanical stop range.

Example: Using G3-251S*
The angle of Joint #1 is set from −110 degrees to +110 degrees.
The angle of Joint #2 is set from −120 degrees to +120 degrees.

EPSON RC+

Execute the following commands from the [Command Window].

```
>JRANGE 1,-582542,5825423      ' the pulse range of Joint #1
>JRANGE 2,-2184533,2184533     ' Sets the pulse range of Joint #2
>RANGE                         ' Checks the setting using Range
-582542, 5825423,-2184533,2184533,-1706667
    ,0, -1494221, 1494221
```

(5) Move the arm by hand until it touches the mechanical stops, and make sure that the arm does not hit any peripheral equipment during operation.

(6) Operate the joint changed at low speeds until it reaches the positions of the minimum and maximum pulse range. Make sure that the arm does not hit the mechanical stops. (Check the position of the mechanical stop and the motion range you set.)

Example: Using G3-251S*
The angle of Joint #1 is set from −110 degrees to +110 degrees.
The angle of Joint #2 is set from −120 degrees to +120 degrees.

EPSON RC+

Execute the following commands from the [Command Window].

```
>MOTOR ON                      'Turns ON the motor
>POWER LOW                     'Enters low-power mode
>SPEED 5                       'Sets at low speeds
>PULSE -582542,0,0,0           'Moves to the min. pulse position of Joint #1
>PULSE 5825423,0,0,0           'Moves to the max. pulse position of Joint #1
>PULSE 2621440,- 2184533,0,0   'Moves to the min. pulse position of Joint #2
>PULSE 2621440,2184533,0,0     'Moves to the max. pulse position of Joint #2
```

The Pulse command (Go Pulse command) moves all joints to the specified positions at the same time. Specify safe positions after considering motion of not only the joints whose pulse range have been changed, but also other joints.

In this example, Joint #1 is moved to the center of its motion range (pulse value: 2621440) when checking Joint #2.

If the arm is hitting the mechanical stops or if an error occurs after the arm hits the mechanical stops, either reset the pulse range to a narrower setting or extend the positions of the mechanical stops within the limit.

5.2.2 Setting the Mechanical Stop of Joint #3

NOTE

This method applies only to the Standard-model Manipulator (G3-**1S*) / Multiple Mounting Manipulator (G3-**1SM).
For the Cleanroom-model (G3-**1C*), the motion range set with the Joint #3 mechanical stop cannot be changed.

(1) Turn ON the Controller and turn OFF the motors using the Motor OFF command.

(2) Push up the shaft while pressing the brake release switch.

Do not push the shaft up to its upper limit or it will be difficult for the arm top cover to be removed. Push the shaft up to a position where the Joint #3 mechanical stop can be changed.

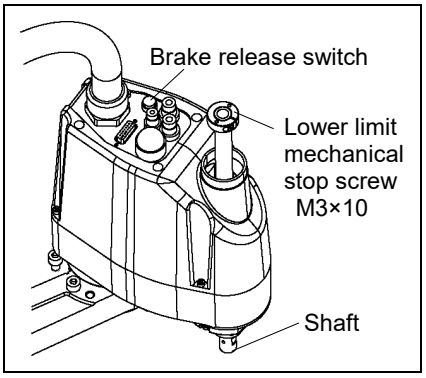

NOTE

When you press the brake release switch, the shaft may lower due to the weight of the end effector. Be sure to hold the shaft by hand while pressing the button.

(3) Turn OFF the Controller.

(4) Loosen the lower limit mechanical stop screw (M3×10).

NOTE

A mechanical stop is mounted on both the top and bottom of Joint #3. However, only the position of the lower limit mechanical stop on the top can be changed. Do not remove the upper limit mechanical stop on the bottom because the calibration point of Joint #3 is specified using the stop.

(5) The upper end of the shaft defines the maximum stroke. Move the lower limit mechanical stop down by the length you want to limit the stroke.
For example, when the lower limit mechanical stop is set at “150 mm” stroke, the lower limit Z coordinate value is “−150”. To change the value to “−130”, move the lower limit mechanical stop down “20 mm”. Use calipers to measure the distance when adjusting the mechanical stop.

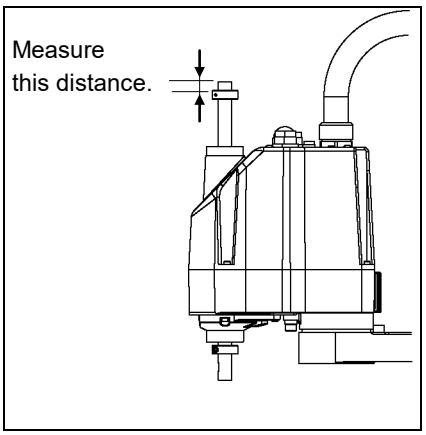

(6) Firmly tighten the lower limit mechanical stop screw (M3×10) not to let it enter the shaft groove.
Recommended tightening torque: 2.45 N·m (25 kgf·cm)

(7) Turn ON the Controller.

(8) Move Joint #3 to its lower limit while pressing the brake release switch, and then check the lower limit position. Do not lower the mechanical stop too far. Otherwise, the joint may not reach a target position.

(9) Calculate the lower limit pulse value of the pulse range using the formula shown below and set the value.

The result of the calculation is always negative because the lower limit Z coordinate value is negative.

Lower limit of pulse (pulse) = lower limit Z coordinate value (mm) / Resolution (mm/pulse)

** For the Joint #3 resolution,
refer to the section *Appendix A: Specifications*.

EPSON RC+

Execute the following command from the [Command Window]. Enter the calculated value in X.

```
>JRANGE 3,X,0    ' Sets the pulse range of Joint #3
```

(10) Using the Pulse command (Go Pulse command), move Joint #3 to the lower limit position of the pulse range at low speed. If the mechanical stop range is less than the pulse range, Joint #3 will hit the mechanical stop and an error will occur. When the error occurs, either change the pulse range to a lower setting or extend the position of the mechanical stop within the limit.

NOTE

If it is difficult to check whether Joint #3 hits a mechanical stop, turn OFF the Controller and lift the arm top cover to check the condition causing the problem from the side.

EPSON RC+

Execute the following commands from the [Command Window]. Enter the value calculated in Step (10) in X.

```
>MOTOR ON        ' Turns ON the motor
>SPEED 5         ' Sets low speed
>PULSE 0,0,X,0   ' Moves to the lower limit-pulse position of Joint #3.
                   (In this example, all pulses except those for Joint #3 are "0".
                   Substitute these "0s" with the other pulse values specifying a
                   position where there is no interference even when lowering
                   Joint #3.)
```

5.3 Setting the Cartesian (Rectangular) Range in the XY Coordinate System of the Manipulator

(Joints #1 and #2)

Use this method to set the upper and lower limits of the X and Y coordinates.

This setting is only enforced by software. Therefore, it does not change the physical range. The maximum physical range is based on the position of the mechanical stops.

EPSON RC+

Set the XYLim setting on the [XYZ Limits] panel shown by selecting [Tools]-[Robot Manager].
(You may also execute the XYLim command from the [Command Window].)

5.4 Standard Motion Range

The following "motion range" diagrams show the standard (maximum) specification. When each Joint motor is under servo control, the center of Joint #3's (shaft's) lowest point moves in the areas shown in the figure.

"Area limited by mechanical stop" is the area where the center of Joint #3's lowest point can be moved when each joint motor is not under servo control.

"Mechanical stop" sets the limited motion range so that the center of Joint #3 cannot move beyond the area mechanically.

"Maximum space" is the area that contains the farthest reach of the arms. If the maximum radius of the end effector is over 60 mm, add the "Area limited by mechanical stop" and "radius of the end effector". The total value is specified as the maximum area.

For the motion area figures, refer to *3.3 Mounting Dimensions*.

G6 Manipulator

This volume contains information for setup and operation of the Manipulators.
Please read this volume thoroughly before setting up and operating the Manipulators.

1. Safety

Unpacking and transportation of the Manipulators and robotic equipment shall be performed by personnel who has taken robot system training held by us and suppliers and should conform to all national and local codes.
Please read this manual and other related manuals before installing the robot system or before connecting cables.
Keep this manual handy for easy access at all times.

1.1 Conventions

Important safety considerations are indicated throughout the manual by the following symbols. Be sure to read the descriptions shown with each symbol.

WARNING	This symbol indicates that a danger of possible serious injury or death exists if the associated instructions are not followed properly.
WARNING	This symbol indicates that a danger of possible serious injury caused by electric shock exists if the associated instructions are not followed properly.
CAUTION	This symbol indicates that a danger of possible harm to people or physical damage to equipment and facilities exists if the associated instructions are not followed properly.

1.2 Design and Installation Safety

This product is intended for transporting and assembling parts in a safely isolated area.
Design and installation of robot system shall be performed by personnel who has taken robot system training held by us and suppliers.
To ensure safety, a safeguard must be installed for the robot system. For details on the safeguard, refer to the *Installation and Design Precautions* in the *Safety* chapter of the *EPSON RC+ User's Guide*.

The following items are safety precautions for design personnel:

WARNING	■ Personnel who design and/or construct the robot system with this product must read the *Safety Manual* to understand the safety requirements before designing and/or constructing the robot system. Designing and/or constructing the robot system without understanding the safety requirements is extremely hazardous, may result in serious bodily injury and/or severe equipment damage to the robot system, and may cause serious safety problems. ■ The Manipulator and the Controller must be used within the environmental conditions described in their respective manuals. This product has been designed and manufactured strictly for use in a normal indoor environment. Using the product in an environment that exceeds the specified environmental conditions may not only shorten the life cycle of the product but may also cause serious safety problems. ■ The robot system must be used within the installation requirements described in the manuals. Using the robot system outside of the installation requirements may not only shorten the life cycle of the product but also cause serious safety problems. ■ When designing or installing a robot system, wear at least the following protective gear. Working without protective gear may cause serious safety problems. Work clothes suitable for work Helmet Safety shoes

Further precautions for installation are mentioned in the chapter *3. Environments and Installation.* Please read this chapter carefully to understand safe installation procedures before installing the robots and robotic equipment.

1.2.1 Strength of the Ball Screw Spline

If a load exceeding the allowable value is applied to the ball screw spline, it may not work properly due to deformation or breakage of the shaft. If the ball screw spline is applied the load exceeding the allowable value, it is necessary to replace the ball screw spline unit.
The allowable loads differ depending on distance where the load is applied to. For calculating the allowable load, see the calculation formula below.

[Allowable bending moment]

G6: $M=27{,}000\ N{\cdot}mm$

Example: If 270 N load is applied
at 100 mm from
the end of the spline nut

[Moment]

$M=F{\cdot}L=100{\cdot}270=27{,}000\ N{\cdot}mm$

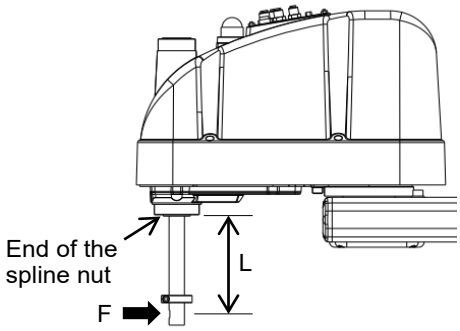

1.3 Operation Safety

The following items are safety precautions for qualified Operator personnel:

WARNING	■ Please carefully read the *Safety Manual* before operating the robot system. Operating the robot system without understanding the safety precautions is extremely hazardous and may result in serious bodily injury and/or severe equipment damage to the robot system. ■ Do not enter the operating area of the Manipulator while the power to the robot system is turned ON. Entering the operating area with the power ON is extremely hazardous and may cause serious safety problems as the Manipulator may move even if it seems to be stopped. ■ Before operating the robot system, make sure that no one is inside the safeguarded area. The robot system can be operated in the mode for teaching even when someone is inside the safeguarded area. The motion of the Manipulator is always in restricted (low speeds and low power) status to secure the safety of an operator. However, operating the robot system while someone is inside the safeguarded area is extremely hazardous and may result in serious safety problems in case that the Manipulator moves unexpectedly. ■ Immediately press the Emergency Stop switch whenever the Manipulator moves abnormally while the robot system is operated.

WARNING	■ To shut off power to the robot system, disconnect the power plug from the power source. Be sure to connect the AC power cable to a power receptacle. DO NOT connect it directly to a factory power source. ■ Before performing any replacement procedure, turn OFF the Controller and related equipment, and then disconnect the power plug from the power source. Performing any replacement procedure with the power ON is extremely hazardous and may result in electric shock and/or malfunction of the robot system. ■ Do not connect or disconnect the motor connectors while the power to the robot system is turned ON. Connecting or disconnecting the motor connectors with the power ON is extremely hazardous and may result in serious bodily injury as the Manipulator may move abnormally, and also may result in electric shock and/or malfunction of the robot system.

CAUTION	■ Whenever possible, only one person should operate the robot system. If it is necessary to operate the robot system with more than one person, ensure that all people involved communicate with each other as to what they are doing and take all necessary safety precautions. ■ Joint #1, #2, and #4: If the joints are operated repeatedly with the operating angle less than 5 degrees, they may get damaged early because the bearings are likely to cause oil film shortage in such situation. To prevent early breakdown, move each joint larger than 50 degrees for about once an hour. Joint #3: If the up-and-down motion of the hand is less than 10 mm, move the joint a half of the maximum stroke for about once an hour. ■ Vibration (resonance) may occur continuously in low speed Manipulator motion (Speed: approx. 5 to 20%) depending on combination of Arm orientation and end effector load. Vibration arises from natural vibration frequency of the Arm and can be controlled by following measures. Changing Manipulator speed Changing the teach points Changing the end effector load

1.4 Emergency Stop

If the Manipulator moves abnormally during operation, immediately press the Emergency Stop switch. Stops the power supply to the motor, and the arm stops in the shortest distance with the dynamic brake and mechanical brake.

Avoid pressing the Emergency Stop switch unnecessarily while the Manipulator is running normally.

- The Manipulator may hit the peripheral equipment.
  When you press the Emergency Stop switch, the operating trajectory until the robot system stops is different from that in normal operation.
- The life of the brakes will be shortened.
  The brakes are locked and the brake friction plate is worn.
  Normal brake life cycle: About 2 years (when the brakes are used 100 times/day)
  However, the rough normal relay life is approximately 20,000 times. If you press the emergency stop switch unnecessarily, the life of the relay will be shortened.
- Impact is applied on the reduction gear unit, and it may result in the short life of the reduction gear unit.

To place the system in emergency mode during normal operation, press the Emergency Stop switch when the Manipulator is not moving.

Refer to the Controller manual for instructions on how to wire the Emergency Stop switch circuit.

Do not press the Emergency Stop switch unnecessarily while the Manipulator is operating. Pressing the switch during the operation makes the brakes work. This will shorten the life of the brakes due to the worn friction plates.

Normal brake life cycle: About 2 years (when the brakes are used 100 times/day)

Do not turn OFF the Controller while the Manipulator is operating.

If you attempt to stop the Manipulator in emergency situations, make sure to stop the Manipulator using the E-STOP of the Controller.

If the Manipulator is stopped by turning OFF the Controller while it is operating, following problems may occur.

Reduction of the life and damage of the reduction gear unit

Position gap at the joints

In addition, if the Controller was forced to be turned OFF by blackouts and the like while the Manipulator is operating, make sure to check the following points after power restoration.

Whether or not the reduction gear is damaged

Whether or not the joints are in their proper positions

If there is a position gap, perform calibration by referring to the *G series Maintenance Manual – G6 Manipulator - 13. Calibration* in the manual.

Before using the Emergency Stop switch, be aware of the followings.

- The Emergency Stop (E-STOP) switch should be used to stop the Manipulator only in case of emergencies.
- To stop the Manipulator operating the program except in emergency, use Pause (halt) or STOP (program stop) commands.
  Pause and STOP commands do not turn OFF the motors. Therefore, the brake does not function.
- For the Safeguard system, do not use the circuit for E-STOP.

NOTE

For details of the Safeguard system, refer to the *Inspection Point.*
Test pulse cannot be used with the emergency stop input of this model.

Stopping distance in emergency

The operating Manipulator cannot stop immediately after the Emergency Stop switch is pressed. In addition, stopping time and stopping distance vary by following factors:

Hand weight	WEIGHT Setting	ACCEL Setting
Workpiece weight	SPEED Setting	Posture etc.

For stopping time and stopping distance of the Manipulator, refer to "*Appendix B: Stopping Time and Stopping Distance in Emergency*".

1.5 Safeguard

To ensure safe operation, install a safety system using safety doors, light curtains, safety floor mats, etc.

When a closed safeguard is open during robot motion, the safeguard interlock function operates. The robot stops immediately and enters into pause state. Then, all robot motors are turned OFF. The descriptions below explain how the safeguard input works.

Safeguard open : The robot stops immediately, motors are turned OFF, and further operation is impossible until either the safeguard is closed or TEACH or TEST mode is turned ON and the enable circuit is engaged.

Safeguard closed : The robot can automatically operate in unrestricted (high power) state.

Do not open the safeguard unnecessarily while motor is ON. Frequent safeguard inputs affect the life of the relay.
Rough normal relay life: Approximately 20,000 times
For the safeguard, do not use the E-STOP circuit.

For details of wiring instructions, refer to the following manual:

RC700 series Manual - Functions required for designing – 11. EMERGENCY

For details of Safeguard, refer to the following manual:

RC700 series Manual - Functions required for designing – 2.7.1 Connection to EMERGENCY Connector

NOTE

Test pulse cannot be used with the safeguard input of this model.

WARNING	■ The EMERGENCY connector on the controller has a safeguard input circuit to connect the safety device interlock switch. To protect operators working near the robot, be sure to connect the interlock switch and make sure that it works properly. ■ The time to stop the robot and the stopping distance by the safeguard interlock function will change depending on the conditions of use. Be sure to confirm that safety is ensured according to the installation environment of the robot.

Stopping distance when the safeguard is opened

The Manipulator in operation cannot stop immediately after the safeguard is opened. In addition, stopping time and stopping distance vary by following factors:

Hand weight	WEIGHT Setting	ACCEL Setting
Workpiece weight	SPEED Setting	Posture etc.

For stopping time and stopping distance of the Manipulator, refer to "*Appendix C: Stopping Time and Stopping Distance When the Safeguard is Opened*".

1.6 Emergency Movement Without Drive Power

When the system is placed in emergency mode, push the arm or joint of the Manipulator by hand as shown below:

Arm #1	Push the arm by hand.
Arm #2	Push the arm by hand.
Joint #3	The joint cannot be moved up/down by hand until the electromagnetic brake applied to the joint has been released. Move the joint up/down while pressing the brake release switch.
Joint #4	For G6-**1**, Rotate the shaft by hand. For G6-**3**, The shaft cannot be rotated by hand until the electromagnetic brake applied to the shaft has been released. Move the shaft while pressing the brake release switch.

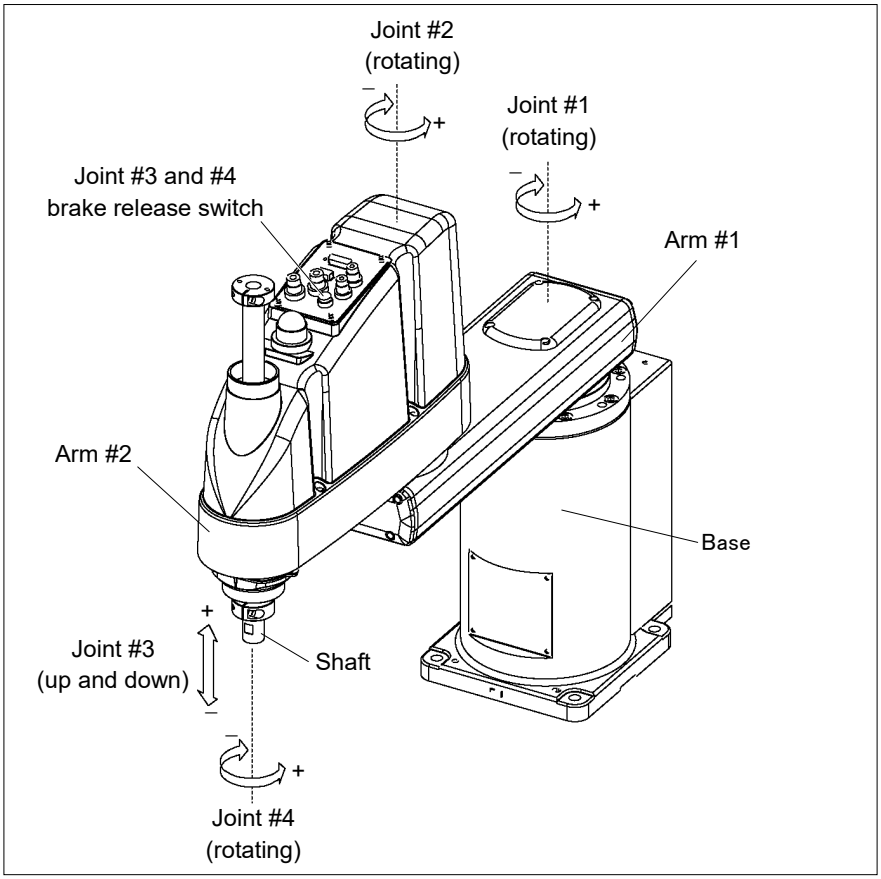

NOTE

The brake release switch affects both Joints #3 and #4. When the brake release switch is pressed in emergency mode, the brakes for both Joints #3 and #4 are released simultaneously. (For G6-**1**, Joint #4 has no brake on it.)

Be careful of the shaft falling and rotating while the brake release switch is pressed because the shaft may be lowered by the weight of an end effector.

1.7 ACCELS Setting for CP Motions

To make the Manipulator move in CP motion, see the following and set ACCELS properly according to the tip load and the Z-axis height.

NOTE

Improper setting may cause following problems.

Reduction of the life and damage of the ball screw spline

Set ACCELS as follows according to the Z-axis height.

ACCELS setting value by Z-axis position and tip load

Z position (mm)	Tip load		
	2 kg or less	4 kg or less	6 kg or less
0 > Z > = - 100	25000 or less	25000 or less	17000 or less
- 100 > Z > = - 200		15000 or less	10000 or less
- 200 > Z > = - 330		10000 or less	6500 or less

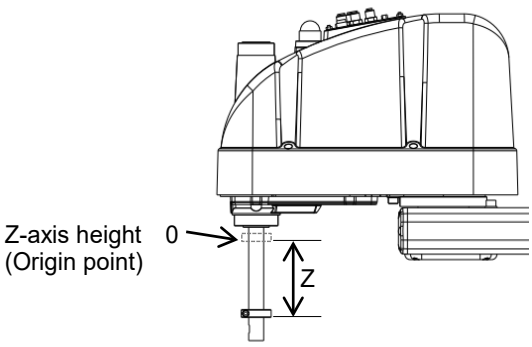

If the Manipulator is operated in CP motion with the wrong set values, make sure to check the following point.

Whether the ball screw spline shaft is deformed or bent

1.8 Warning Labels

The Manipulator has the following warning labels.

The warning labels are attached around the locations where specific dangers exist.
Be sure to comply with descriptions and warnings on the labels to operate and maintain the Manipulator safely.
Do not tear, damage, or remove the warning labels. Use meticulous care when handling those parts or units to which the following warning labels are attached as well as the nearby areas.

Location	Warning Label	NOTE
A		Before loosening the base mounting screws, hold the arm and secure it tightly with a band to prevent hands or fingers from being caught in the Manipulator.
B		Be careful to avoid collision.
C		Hazardous voltage exists while the Manipulator is ON. To avoid electric shock, do not touch any internal electric parts.

Location	Warning Label	NOTE
D		You can catch your hand or fingers between the shaft and cover when bringing your hand close to moving parts. * Manipulators with bellows do not have this label since there is no danger of being your hand or fingers caught.
E		Be careful of the hand falling while the brake release switch is being pressed.
F	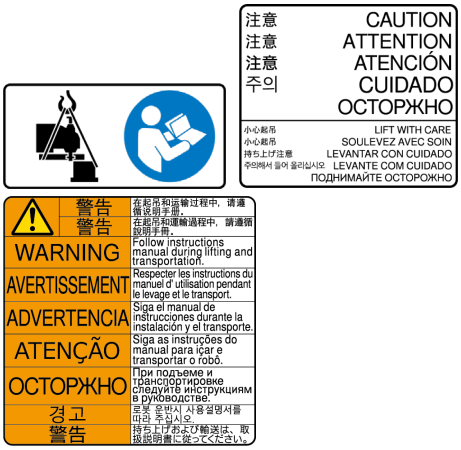	Only authorized personnel should perform sling work and operate a crane and a forklift. When these operations are performed by unauthorized personnel, it is extremely hazardous and may result in serious bodily injury and/or severe equipment damage to the robot system.

Location	Label	Note
1	—	The product name, model name, serial number, information which laws and regulations are supported, product specifications, manufacturer, importer, date of manufacture, country of manufacture, etc. are listed. For details, see the label affixed to the product.

Location of Labels

Common

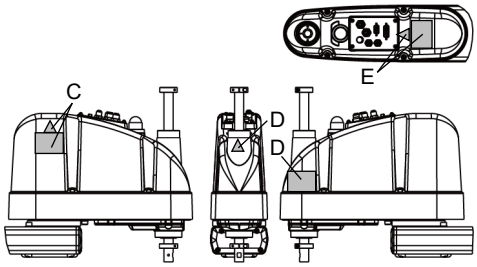

Table Top Mounting:

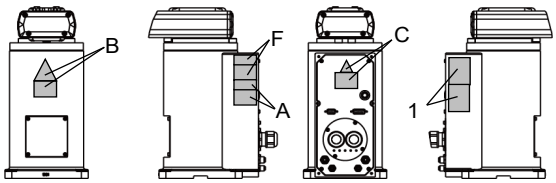

Ceiling Mounting

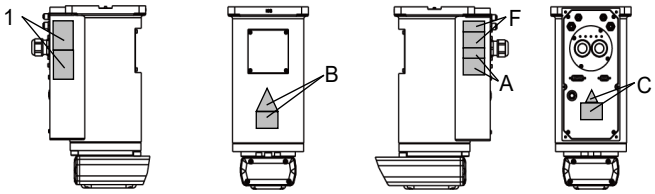

Wall Mounting

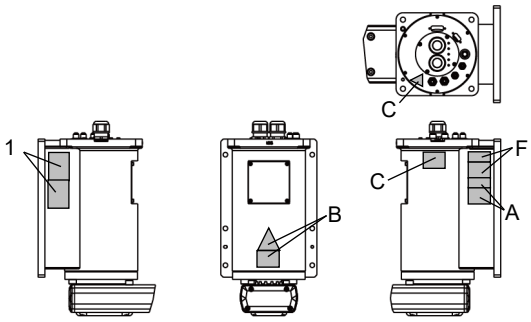

1.9 Response for Emergency or Malfunction

1.9.1 Collision

When the Manipulator collides with a mechanical stopper or peripheral device etc., discontinue use and contact the supplier.

1.9.2 Getting body caught in Manipulator

When the operator is caught between the Manipulator and a mechanical part such as a base table, press the emergency stop switch to release the brake on the subject arm, and then move the arm by hand.

Get body caught in the arms:
The break is not working. Move the arms manually.

Get body caught in the shafts:
The break is working. Press the break release switch and move the shafts.

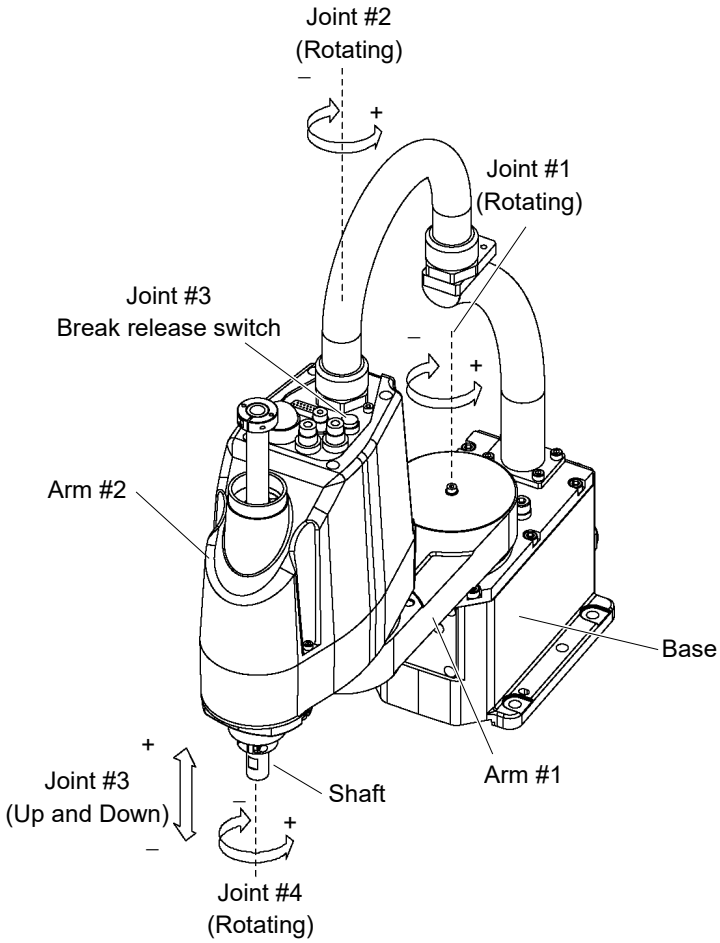

CAUTION	■ While pressing the break release switch, not only Joint #3 but also Joint #4 may move due to its own weight. Be careful of the shaft falling or rotating.

2. Specifications

2.1 Model Number and Model Differences

G6-45 1 S □ -UL

□	: Standard
-UL	: UL1740 certified

Type

□	: Table Top mounting
W	: Wall mounting
R	: Ceiling mounting

Environment

S	: Standard
C	: Clean room & ESD
D	: Protected : IP 54 (with bellows option)
P	: Protected : IP 65

Joint #3 stroke

1	: 180 mm (G6-***S*, D*) 150 mm (G6-***C*, P*, D* bellows option)
3	: 330 mm (G6-***S*, D*) 300 mm (G6-***C*, P*, D* bellows option)

Arm length

45	: 450 mm
55	: 550 mm
65	: 650 mm

Environment

Cleanroom-model

Cleanroom-model Manipulator includes additional features that reduce dust emitted by the Manipulator to enable use in clean room environments.

Protected-model (IP54, IP65)

The Protected-model Manipulators operate under adverse conditions with dust and oily smoke.

G6-***D*

Normal G6-***D* Manipulators do not have bellows. The normal G6-***D* Manipulator (without bellows option) operates under adverse conditions with oily mist. If necessary, select the bellows option at shipment.

The Manipulators with bellows (option) comply with grade of protection IP54 (IEC 60529, JIS C0920).

G6-***P*

G6-***P* Manipulators comply with grade of protection IP65 (IEC 60529, JIS C0920).

For details on the specifications, refer to *Appendix A: Specifications*.

2.2 Part Names and Outer Dimensions

2.2.1 Table Top Mounting

Standard-model G6-***S

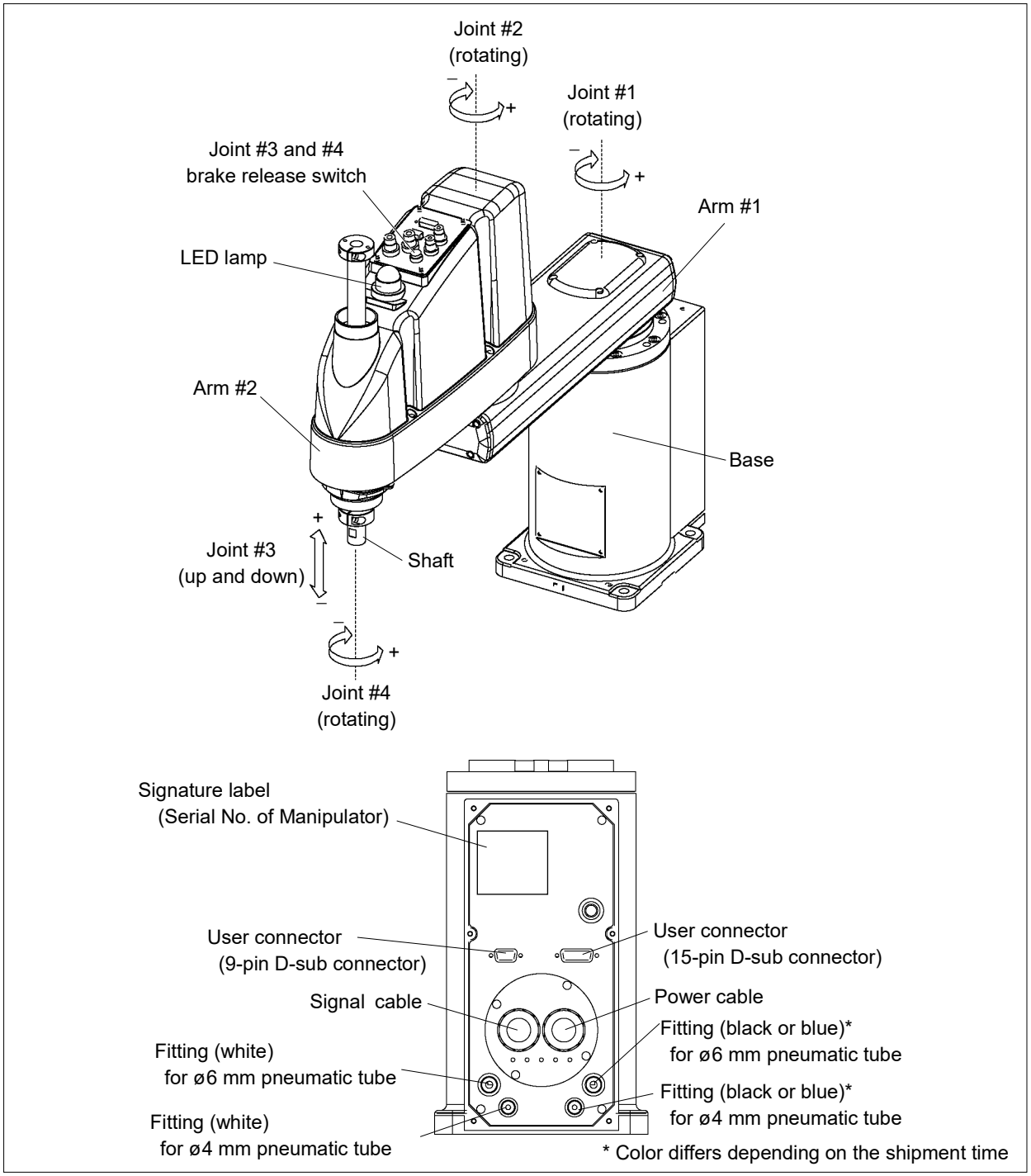

NOTE
- The brake release switch affects both Joints #3 and #4. When the brake release switch is pressed in emergency mode, the brakes for both Joints #3 and #4 are released simultaneously. (For G6-**1**, Joint #4 has no brake on it.)
- While the LED lamp is on, the current is being applied to the manipulator. Performing any work with the power ON is extremely hazardous and it may result in electric shock and/or improper function of the robot system. Make sure to turn OFF the controller power before the maintenance work.

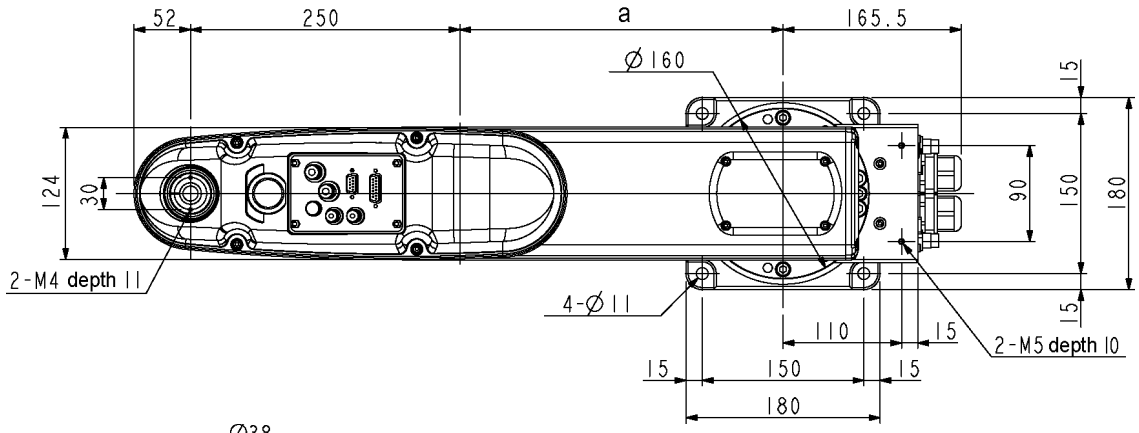

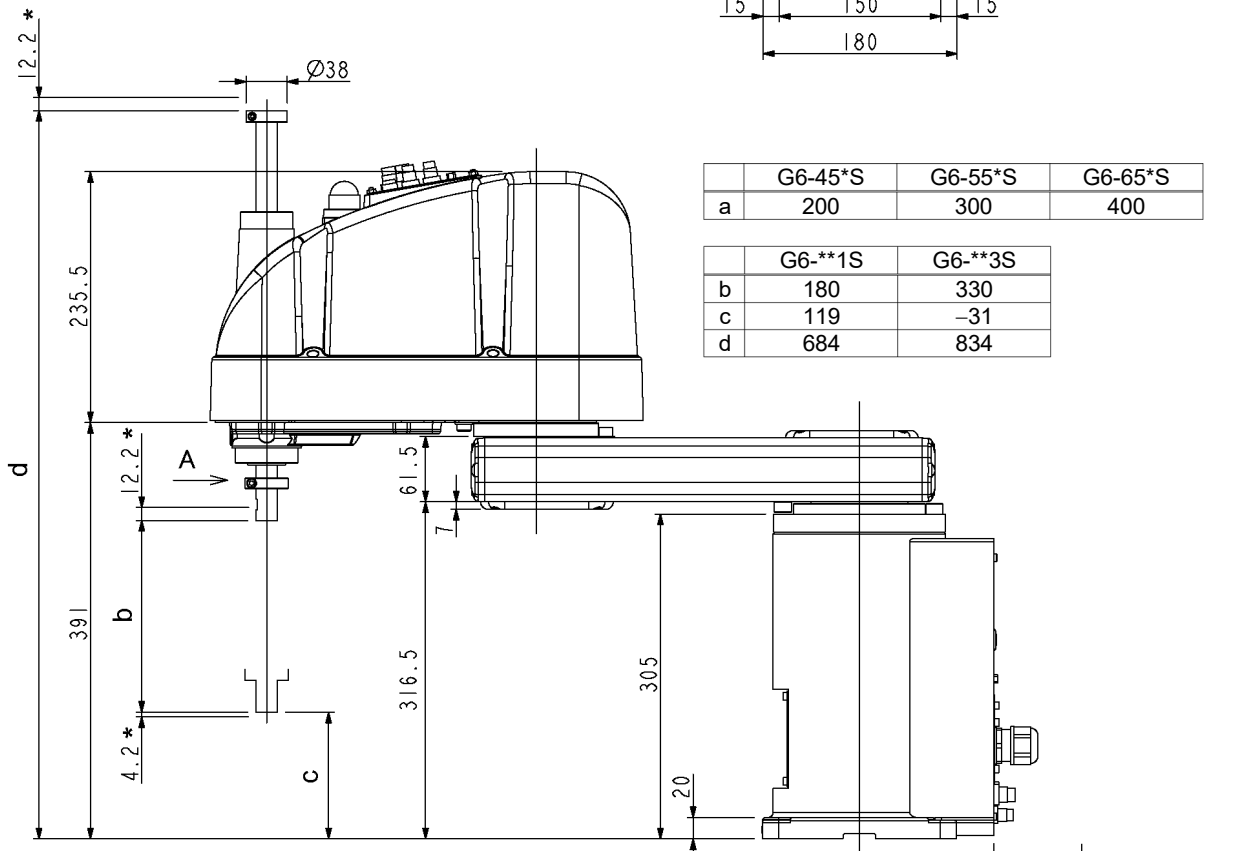

	G6-45*S	G6-55*S	G6-65*S
a	200	300	400

	G6-**1S	G6-**3S
b	180	330
c	119	–31
d	684	834

(*) indicates the stroke margin by mechanical stop.

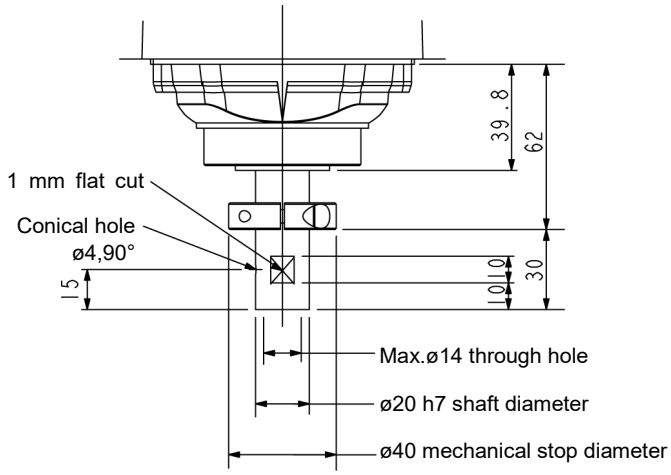

Detail of “A”
(Calibration point position of Joints #3 and #4)

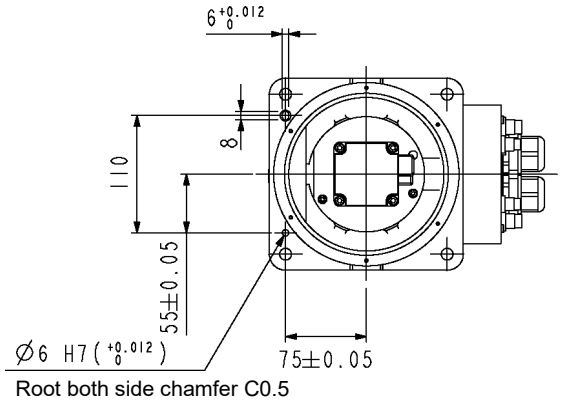

Reference through hole
(View from the bottom of the base)

Cleanroom-model G6-***C

The following figure shows the additional parts and specifications for the Table Top mounting Cleanroom-model when compared with the Standard-model in appearance.

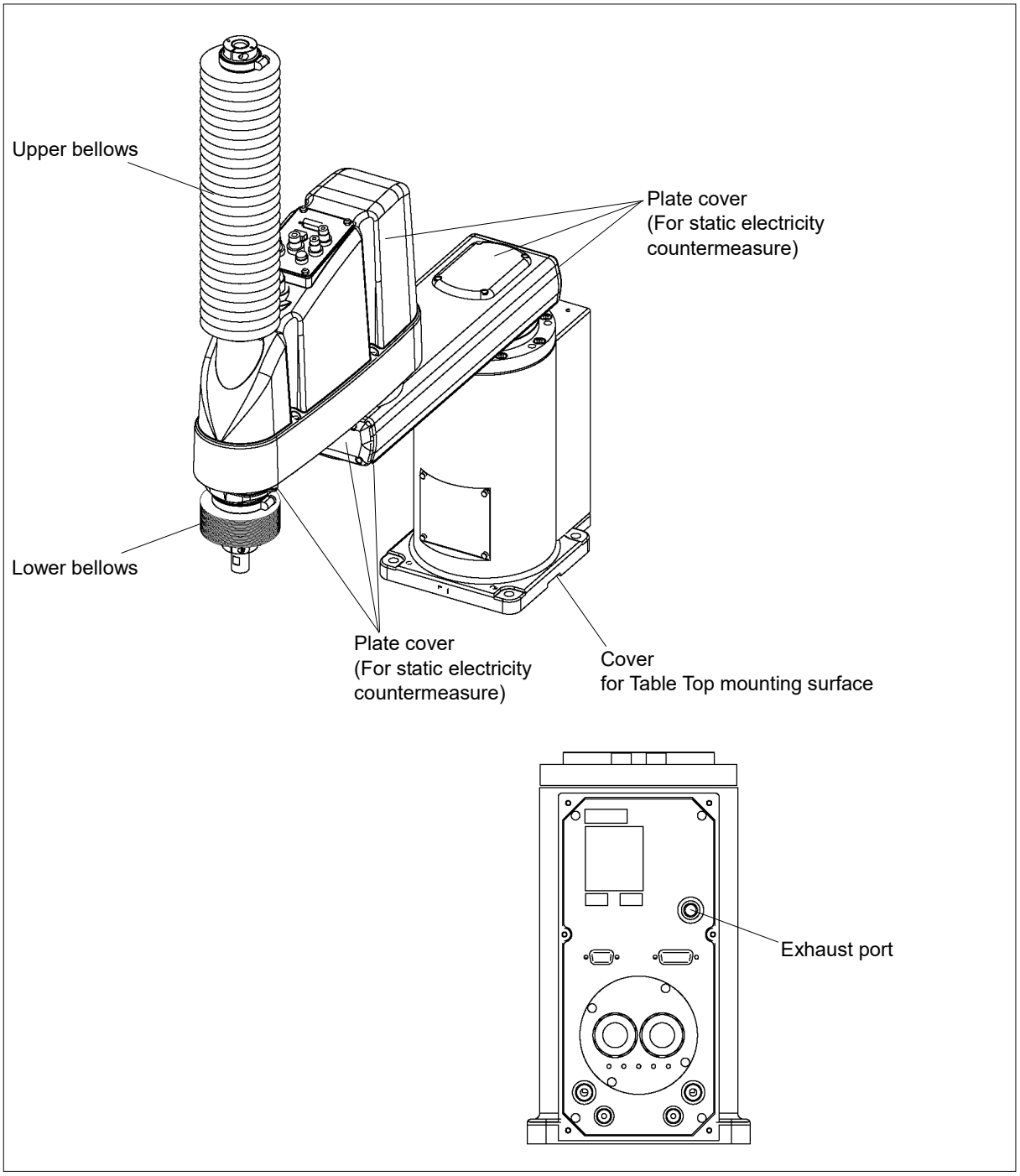

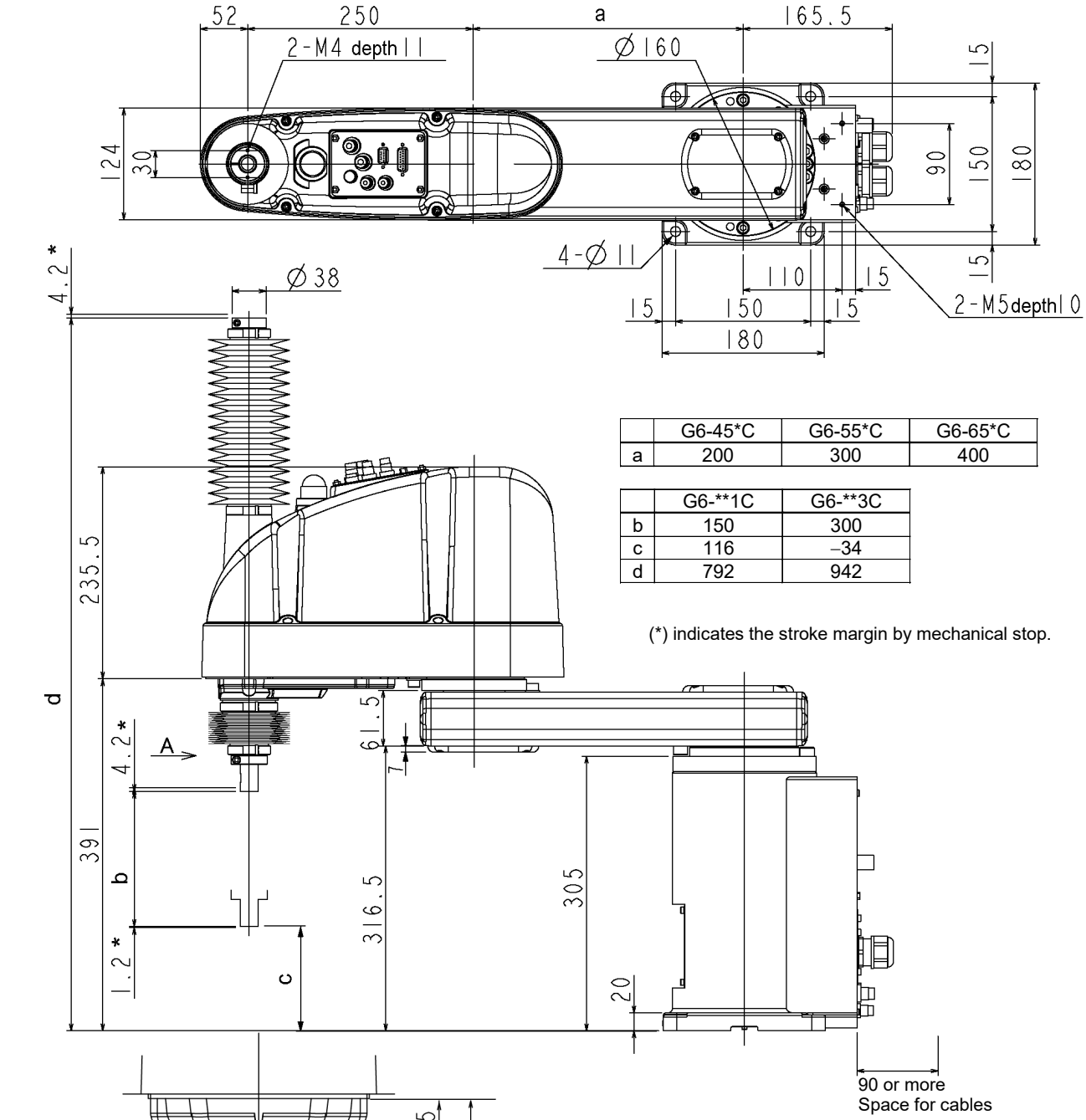

	G6-45*C	G6-55*C	G6-65*C
a	200	300	400

	G6-**1C	G6-**3C
b	150	300
c	116	–34
d	792	942

(*) indicates the stroke margin by mechanical stop.

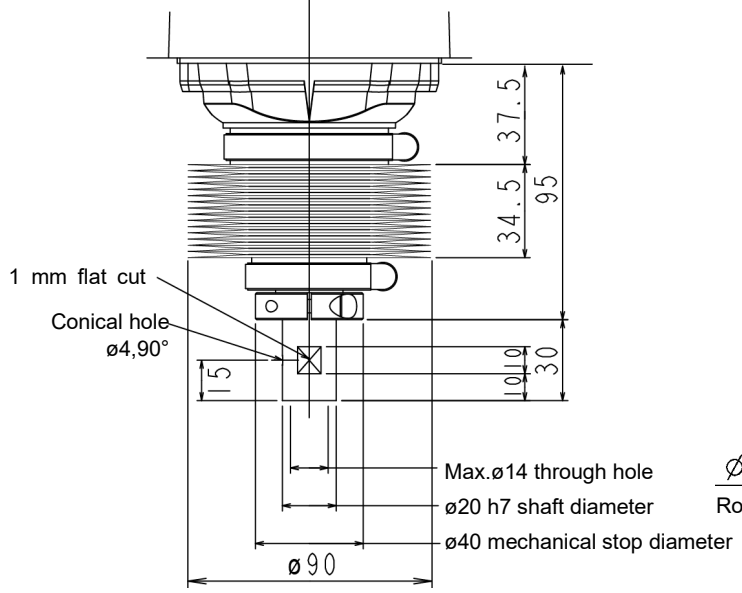

Detail of “A”
(Calibration point position of Joints #3 and #4)

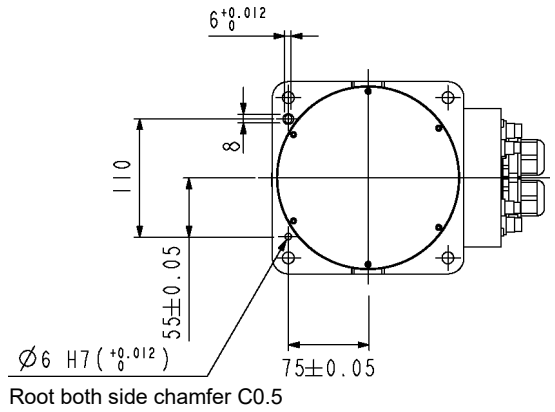

Reference through hole
(View from the bottom of the base)

Protected-model G6-***D/P

The following figure shows the additional parts and specifications for the Table Top mounting Protected-model when compared with the Standard-model in appearance.
Normal G6-***D* Manipulators do not have bellows. If necessary, select the bellows option at shipment. The following figure is a Manipulator with bellows option.
For dimensions of the end part of G6-***D* without bellows option, refer to G6-***S.

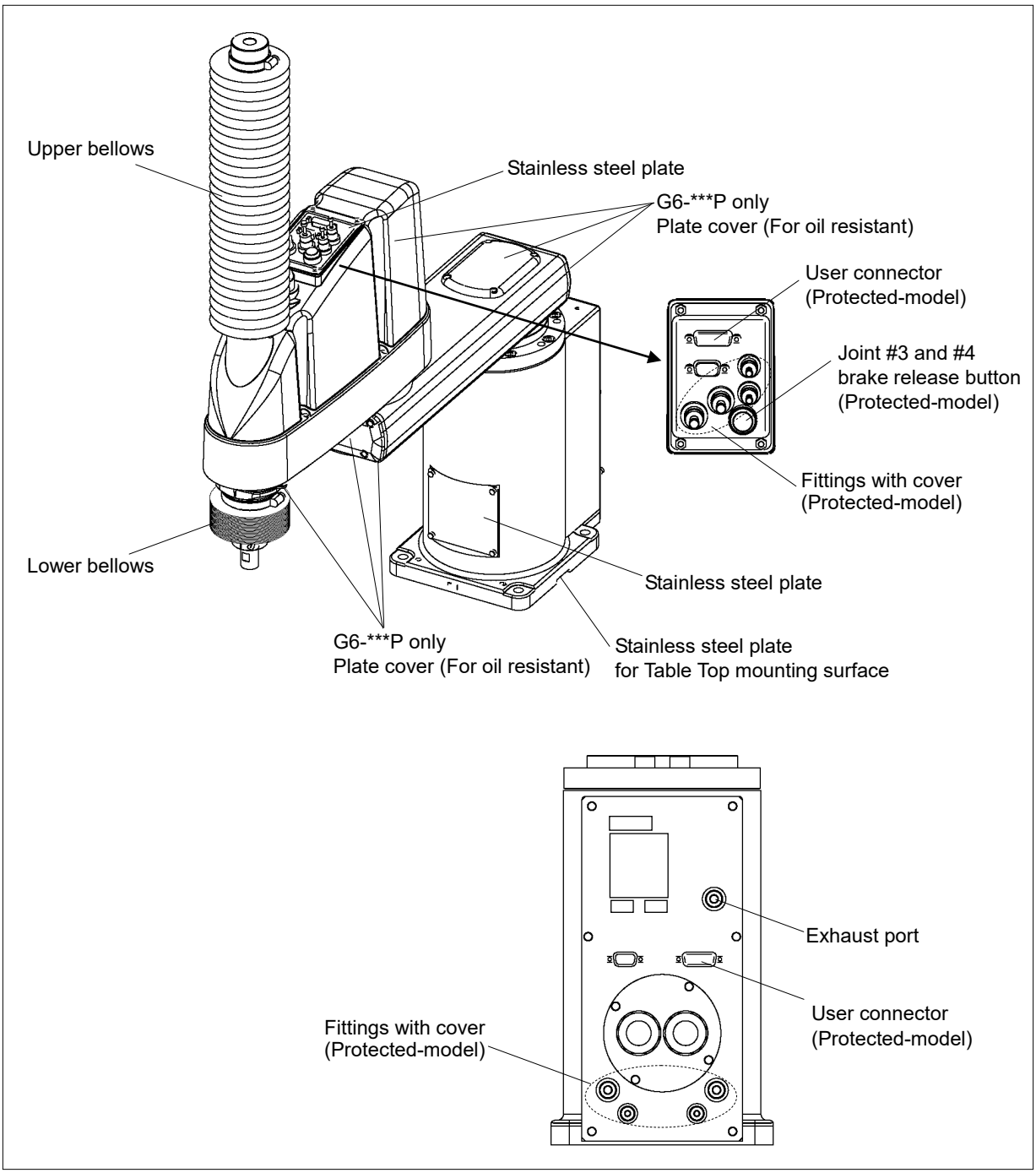

NOTE ☞ For Protected-model, all the screws used for outer parts are stainless steel screws. (Excluding the screw used for mechanical stop.)

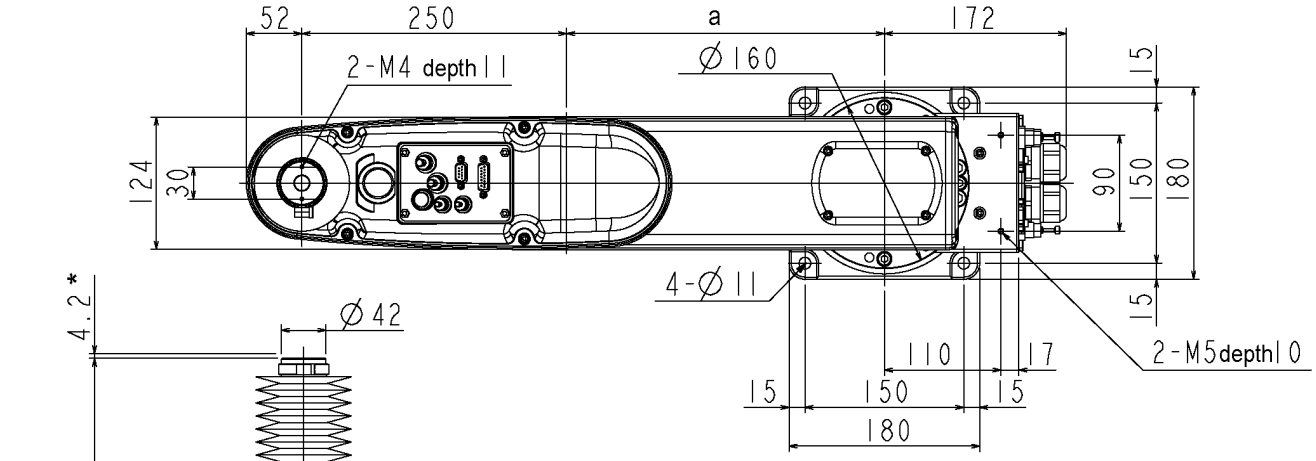

	G6-45*D, P	G6-55*D, P	G6-65*D, P
a	200	300	400

	G6-**1D, P	G6-**3D, P
b	150	300
c	116	–34
d	795.5	945.5

(*) indicates the stroke margin by mechanical stop.

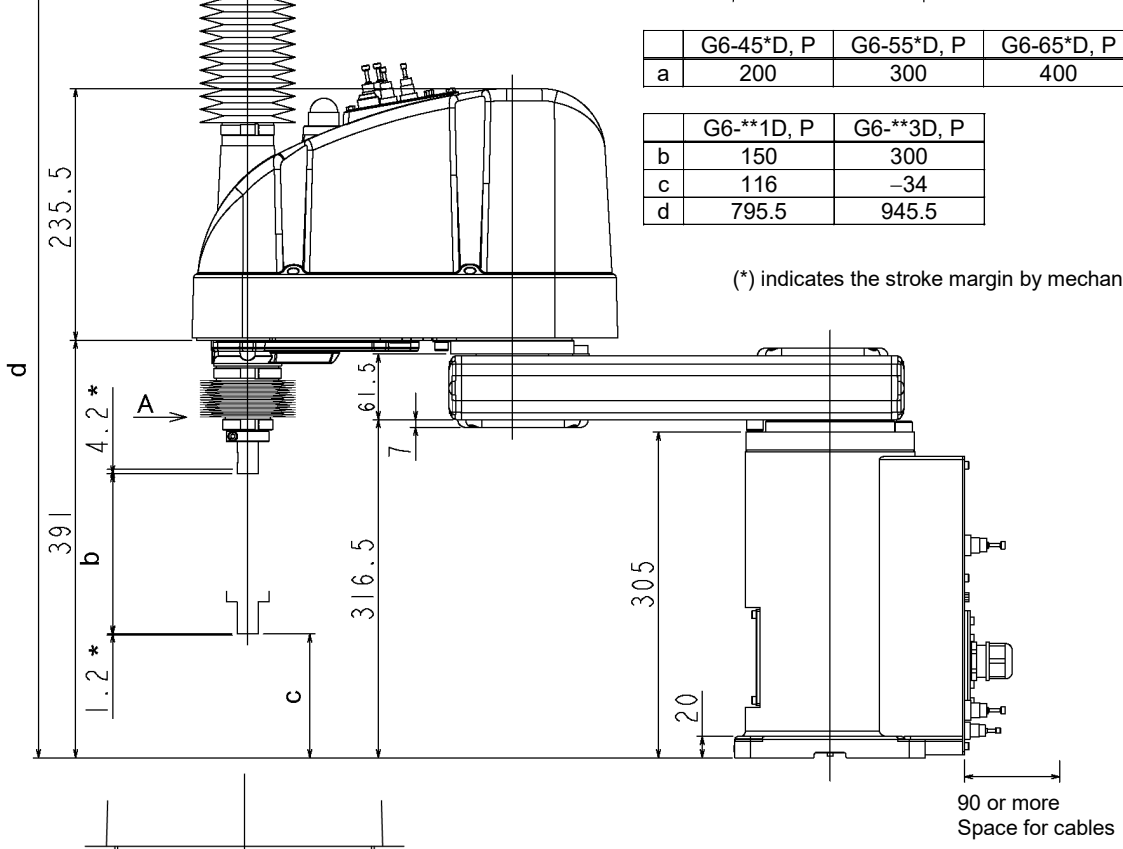

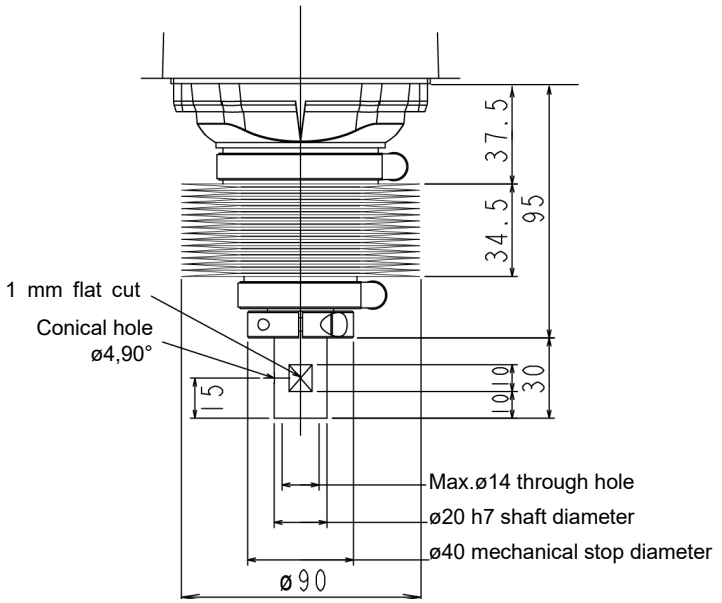

Detail of “A”
(Calibration point position of Joints #3 and #4)

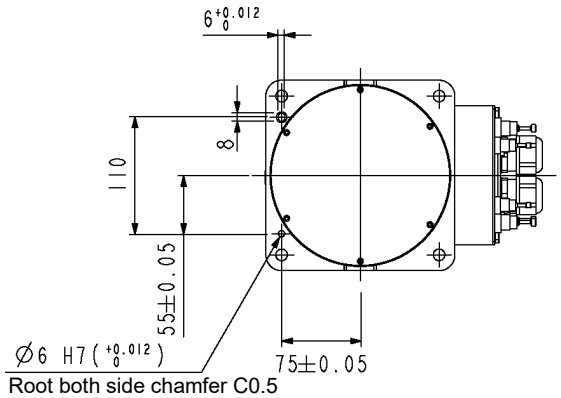

Reference through hole
(View from the bottom of the base)

2.2.2 Wall Mounting

Standard-model G6-***SW

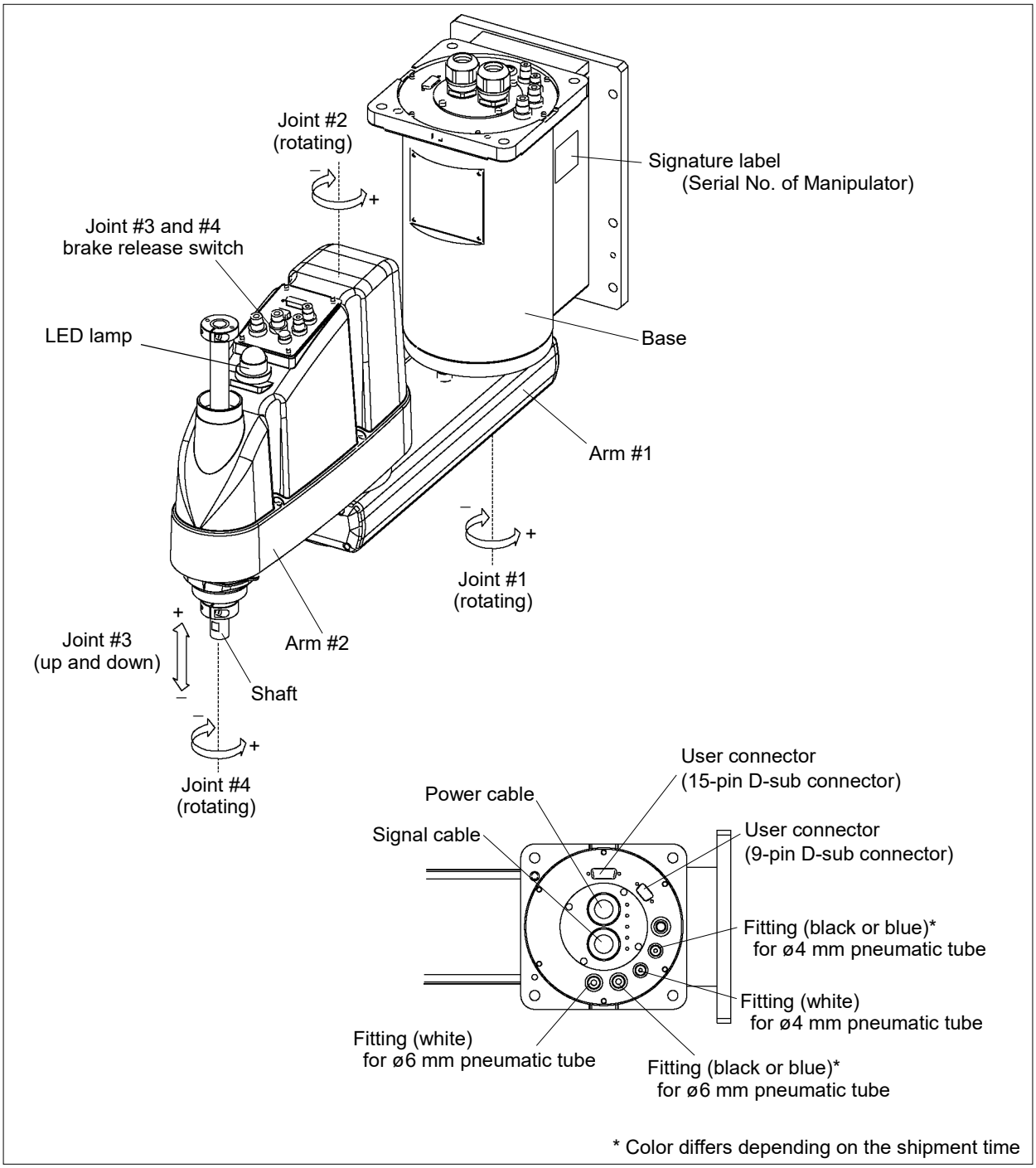

NOTE

- The brake release switch affects both Joints #3 and #4. When the brake release switch is pressed in emergency mode, the brakes for both Joints #3 and #4 are released simultaneously.
  (For G6-**1**, Joint #4 has no brake on it.)
- While the LED lamp is on, the current is being applied to the manipulator. Performing any work with the power ON is extremely hazardous and it may result in electric shock and/or improper function of the robot system. Make sure to turn OFF the controller power before the maintenance work.

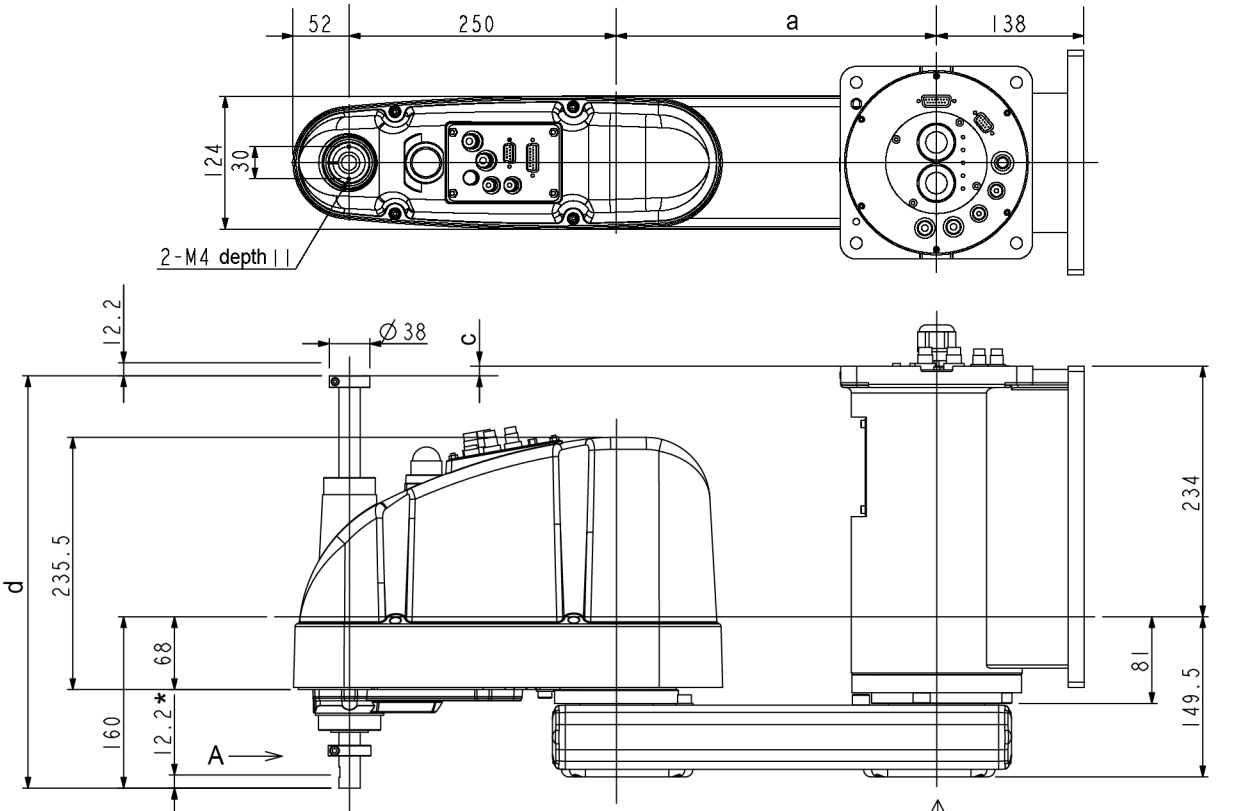

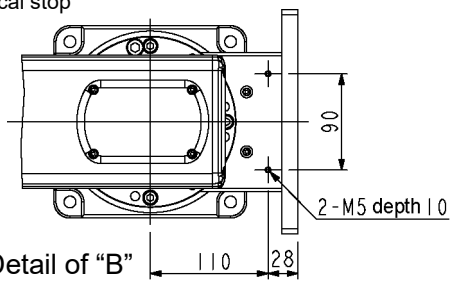

Detail of "B"

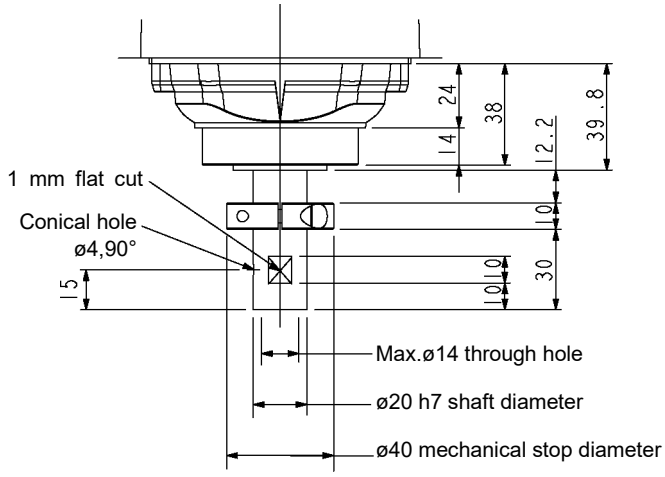

Detail of "A"
(Calibration point position of Joints #3 and #4)

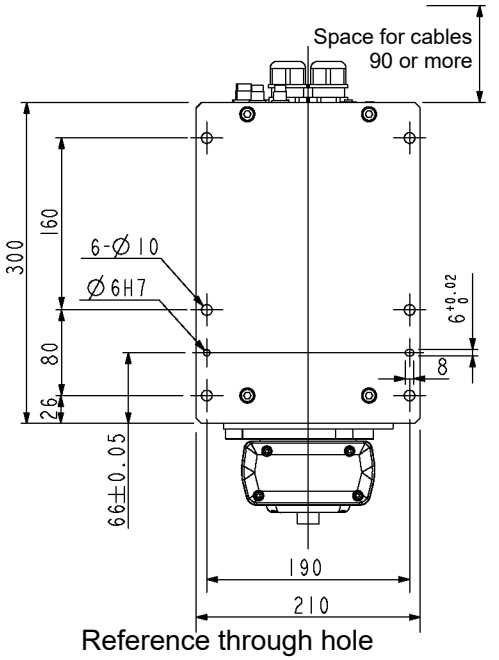

Reference through hole
(View from the bottom of the base)

	G6-45*SW	G6-55*SW	G6-65*SW
a	200	300	400

	G6-**1SW	G6-**3SW
b	180	330
c	-9	141
d	385	535

Cleanroom-model G6-***CW

The following figure shows the additional parts and specifications for the Wall mounting Cleanroom-model when compared with the Standard-model in appearance.

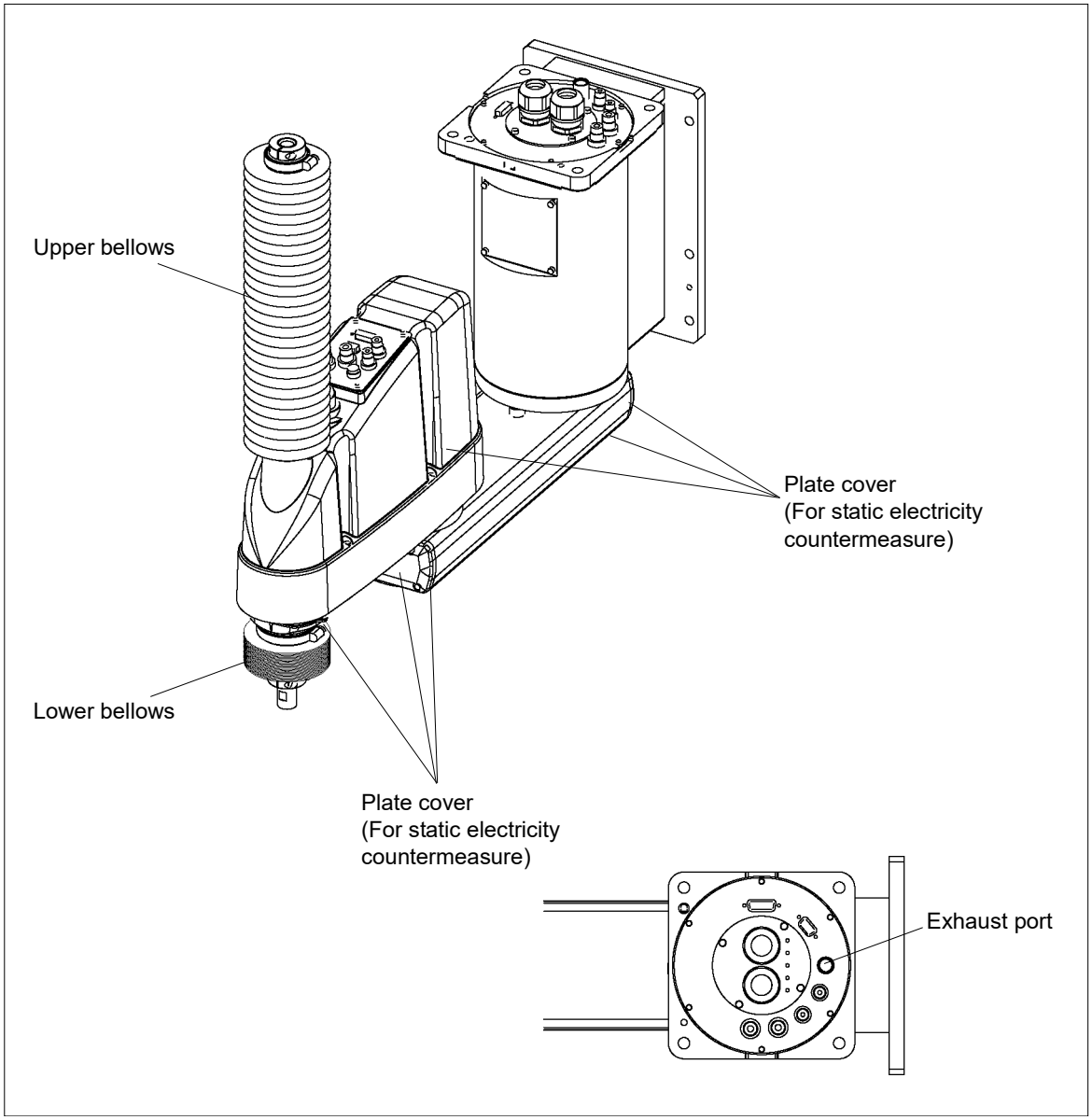

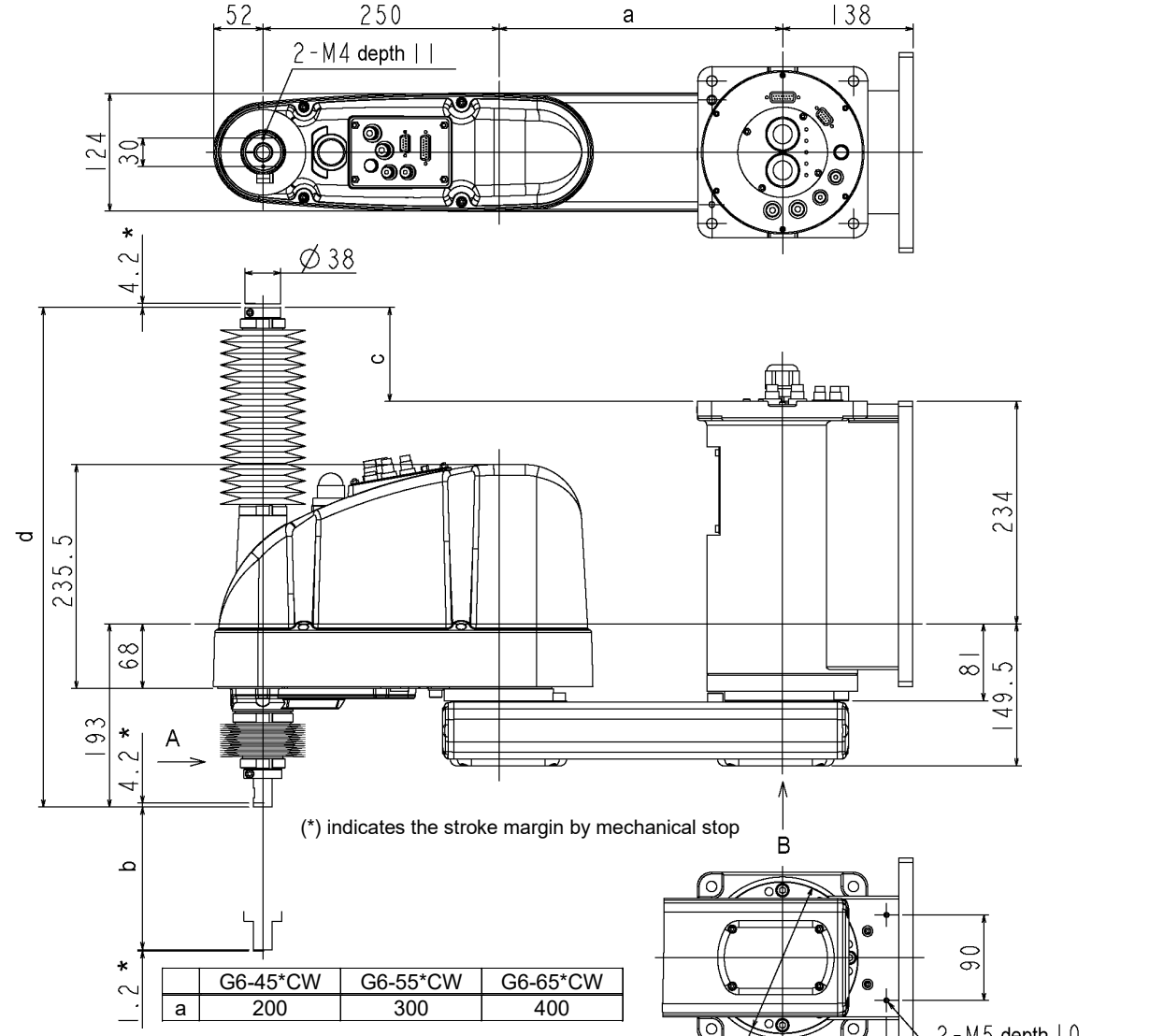

(*) indicates the stroke margin by mechanical stop

Detail of "B"

	G6-45*CW	G6-55*CW	G6-65*CW
a	200	300	400

	G6-**1CW	G6-**3CW
b	150	300
c	99	249
d	526	676

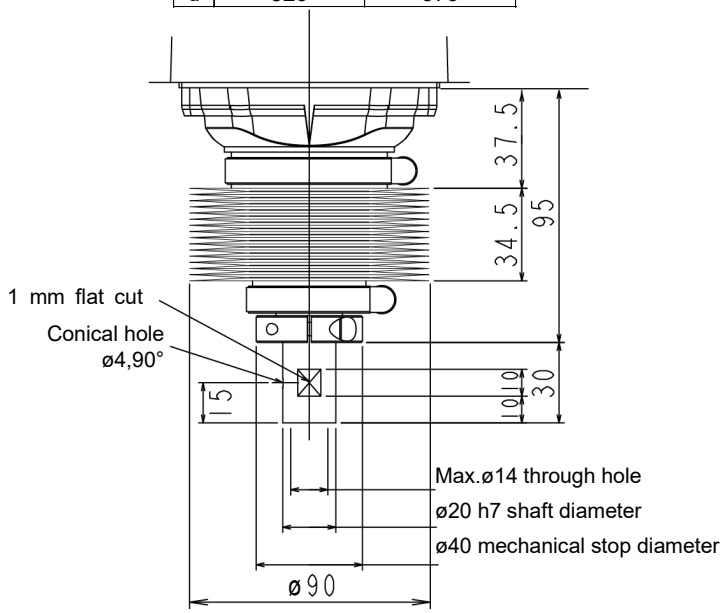

Detail of "A"
(Calibration point position of Joints #3 and #4)

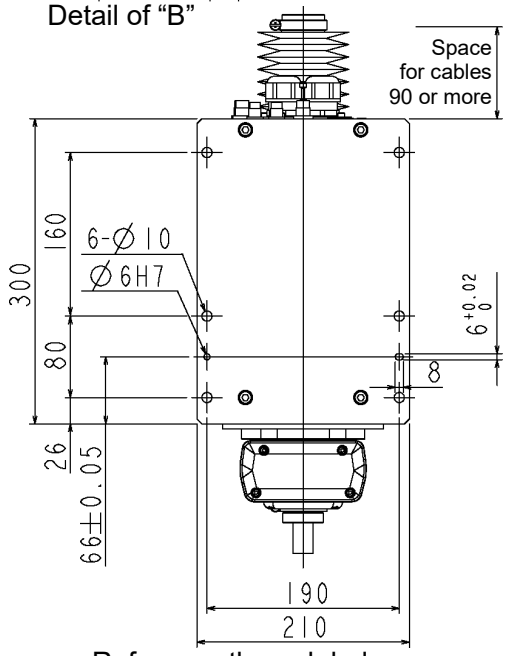

Reference through hole
(View from the bottom of the base)

Protected-model G6-***DW / PW

The following figure shows the additional parts and specifications for the Wall mounting Protected-model when compared with the Standard-model in appearance.

Normal G6-***DW Manipulators do not have bellows. If necessary, select the bellows option at shipment. The following figure is a Manipulator with bellows option.

For dimensions of the end part of G6-***DW without bellows option, refer to G6-***SW.

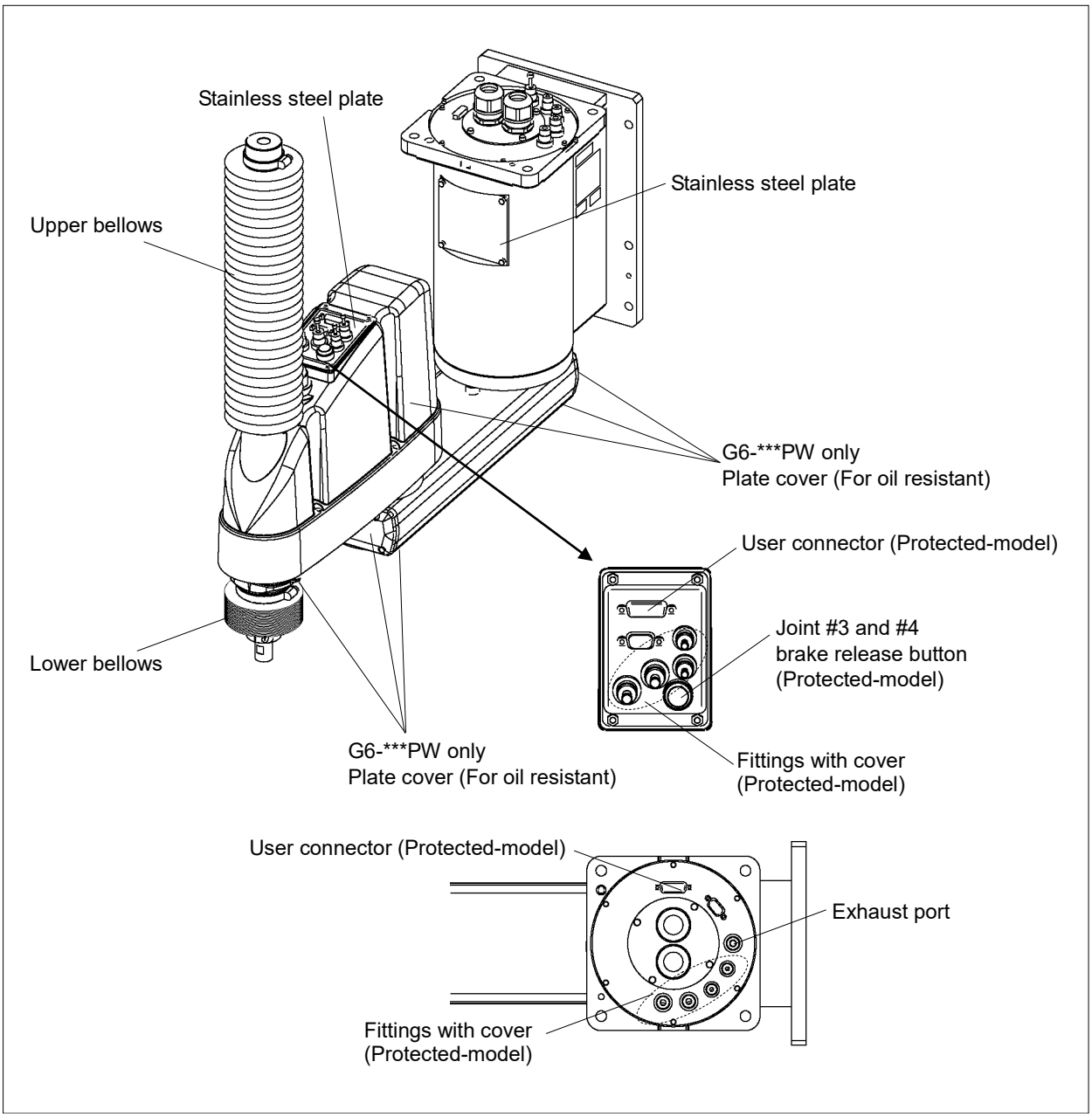

NOTE For Protected-model, all the screws used for outer parts are stainless steel screws. (Excluding the screw used for mechanical stop.)

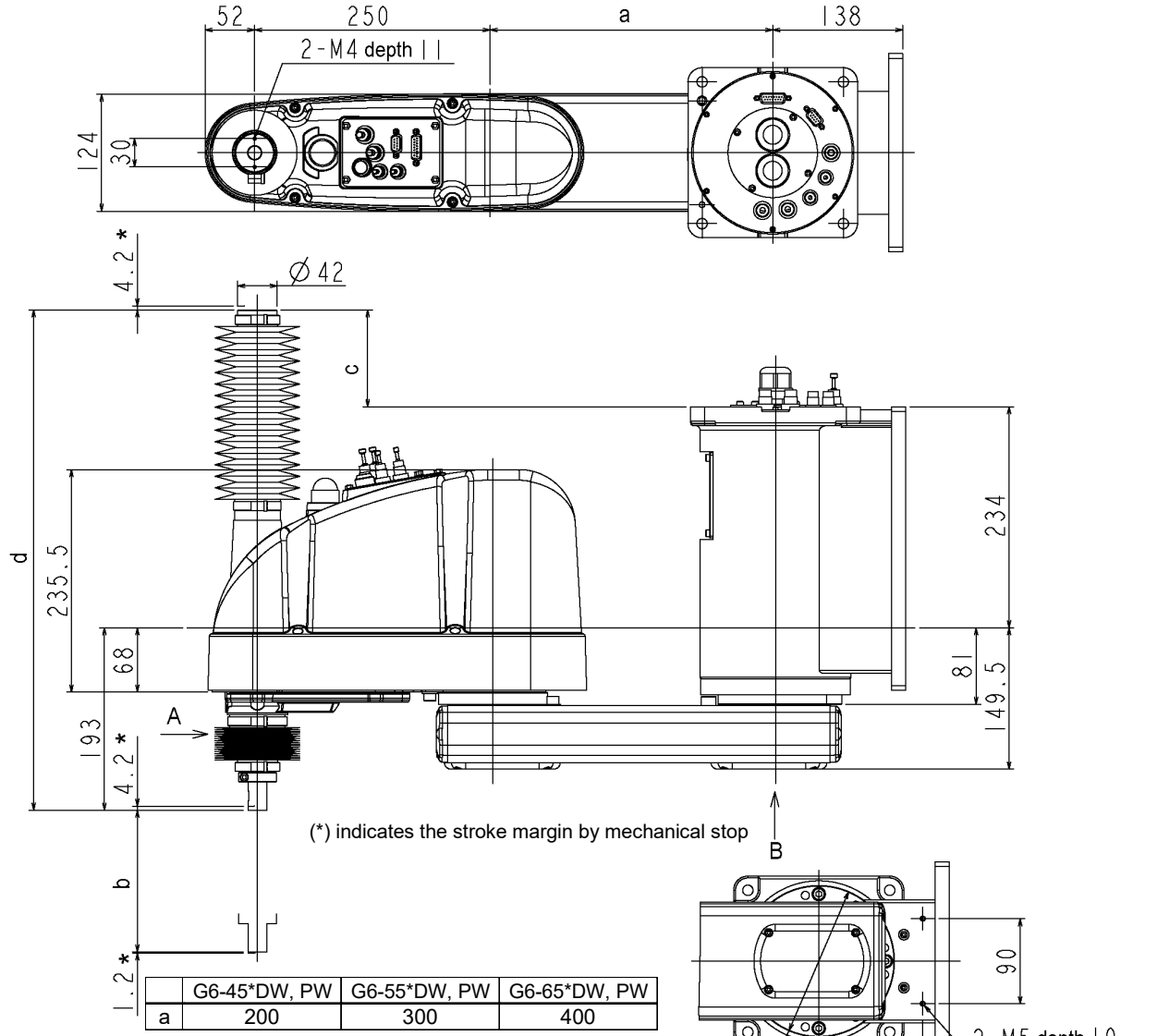

	G6-45*DW, PW	G6-55*DW, PW	G6-65*DW, PW
a	200	300	400

	G6-**1DW, PW	G6-**3DW, PW
b	150	300
c	102.5	252.5
d	529.5	679.5

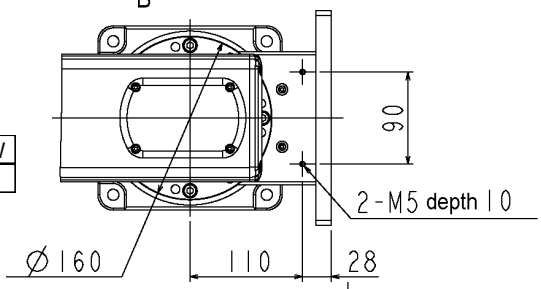

Detail of “B”

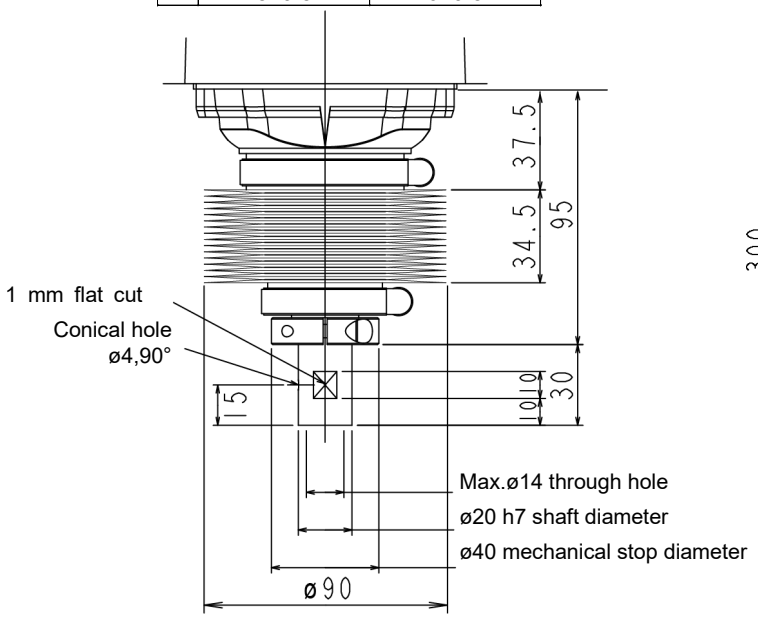

Detail of “A”
(Calibration point position of Joints #3 and #4)

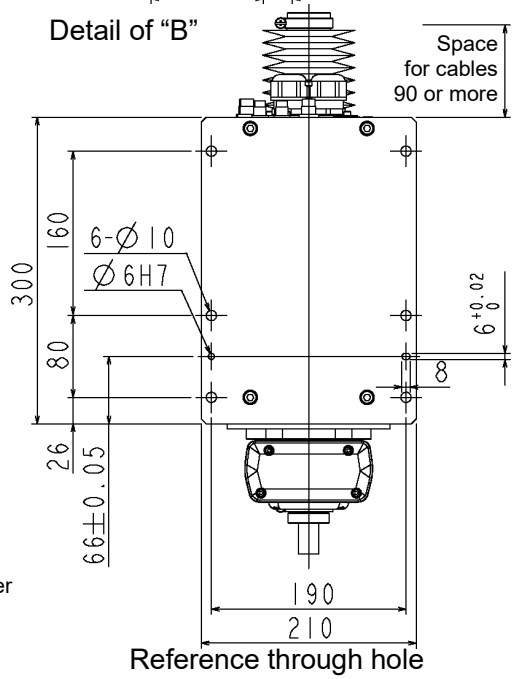

Reference through hole
(View from the bottom of the base)

2.2.3 Ceiling Mounting

Standard-model G6-***SR

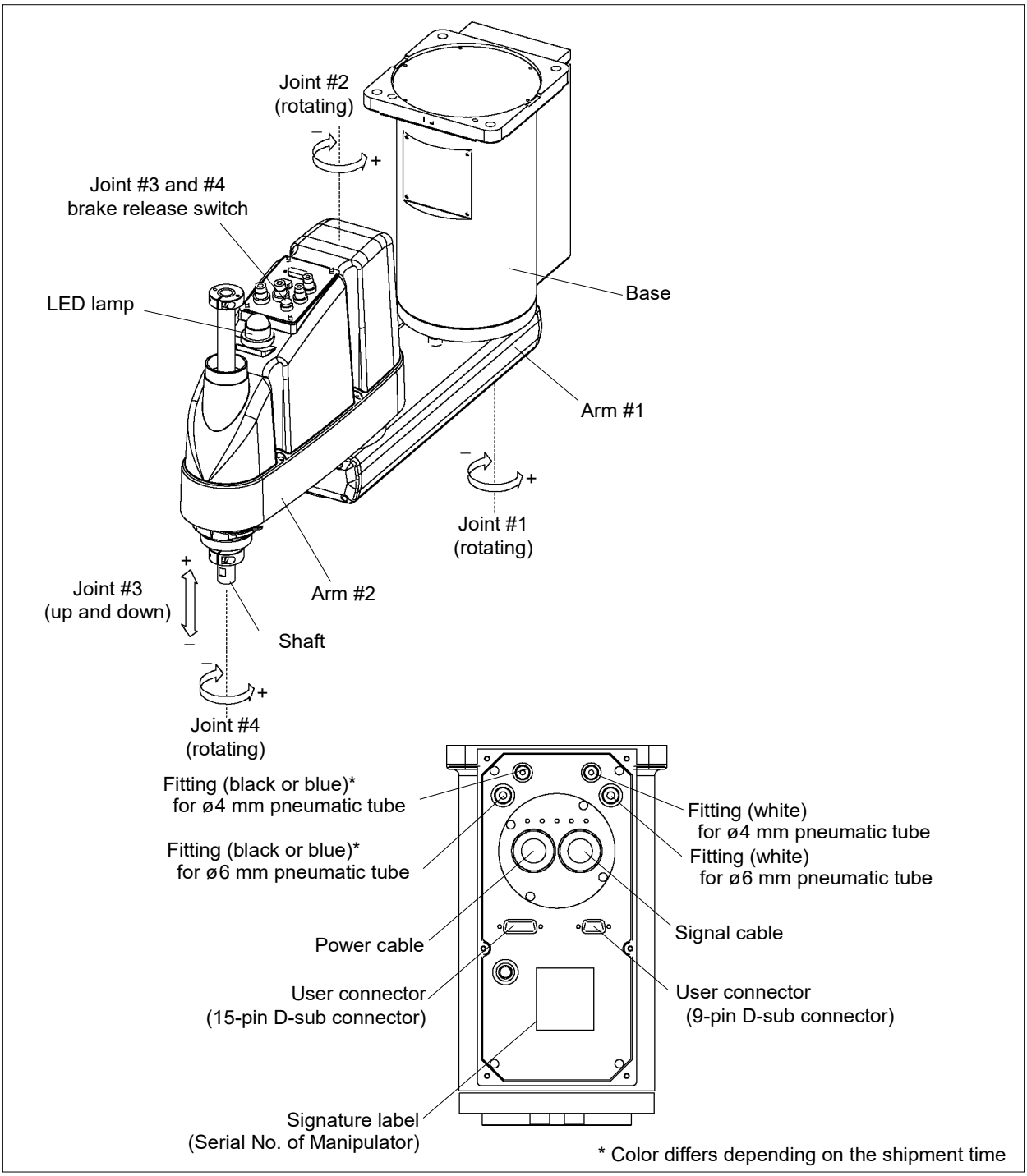

NOTE

- The brake release switch affects both Joints #3 and #4. When the brake release switch is pressed in emergency mode, the brakes for both Joints #3 and #4 are released simultaneously.
  (For G6-**1**, Joint #4 has no brake on it.)
- While the LED lamp is on, the current is being applied to the manipulator. Performing any work with the power ON is extremely hazardous and it may result in electric shock and/or improper function of the robot system. Make sure to turn OFF the controller power before the maintenance work.

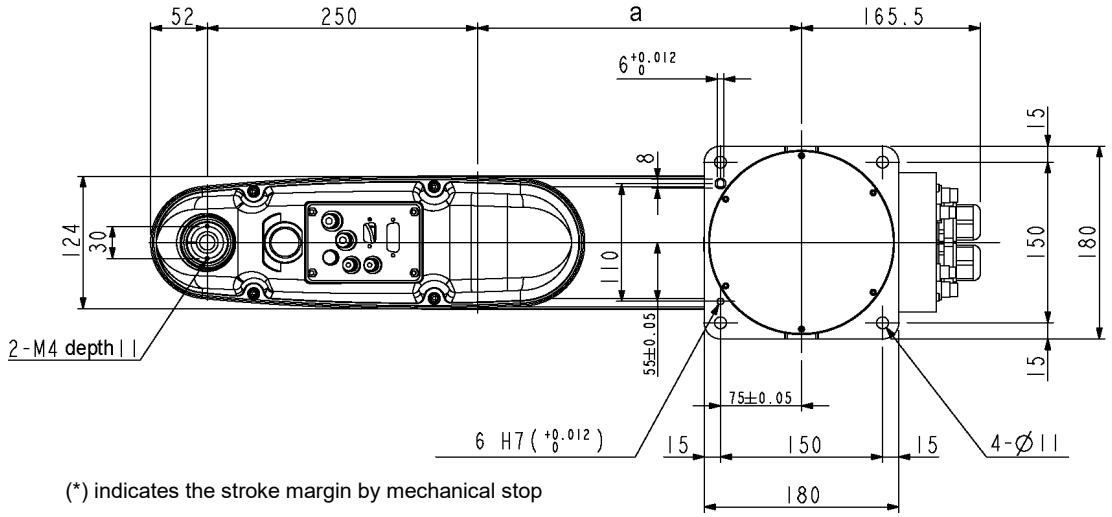

(*) indicates the stroke margin by mechanical stop

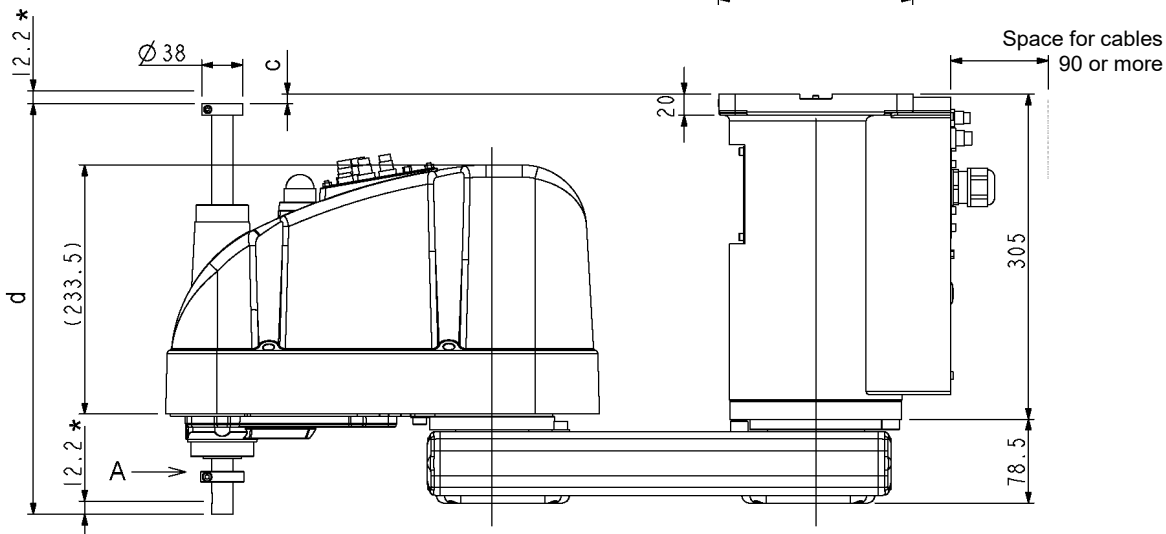

Detail of “B”

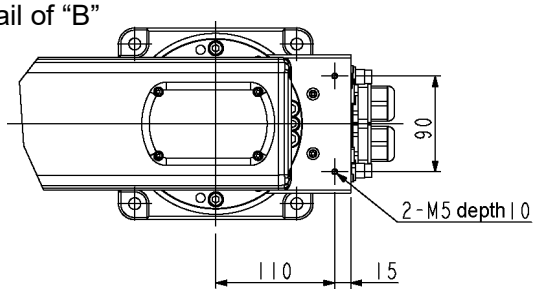

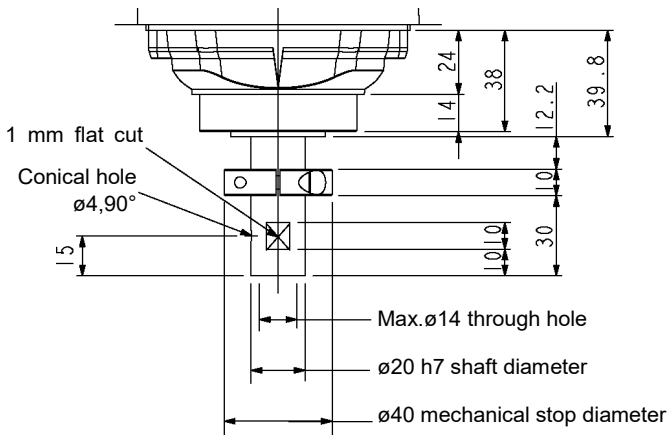

Detail of “A”
(Calibration point position of Joints #3 and #4)

	G6-45*SR	G6-55*SR	G6-65*SR
a	200	300	400

	G6-**1SR	G6-**3SR
b	180	330
c	–9	141
d	385	535

Cleanroom-model G6-***CR

The following figure shows the additional parts and specifications for the Ceiling mounting Cleanroom-model when compared with the Standard-model in appearance.

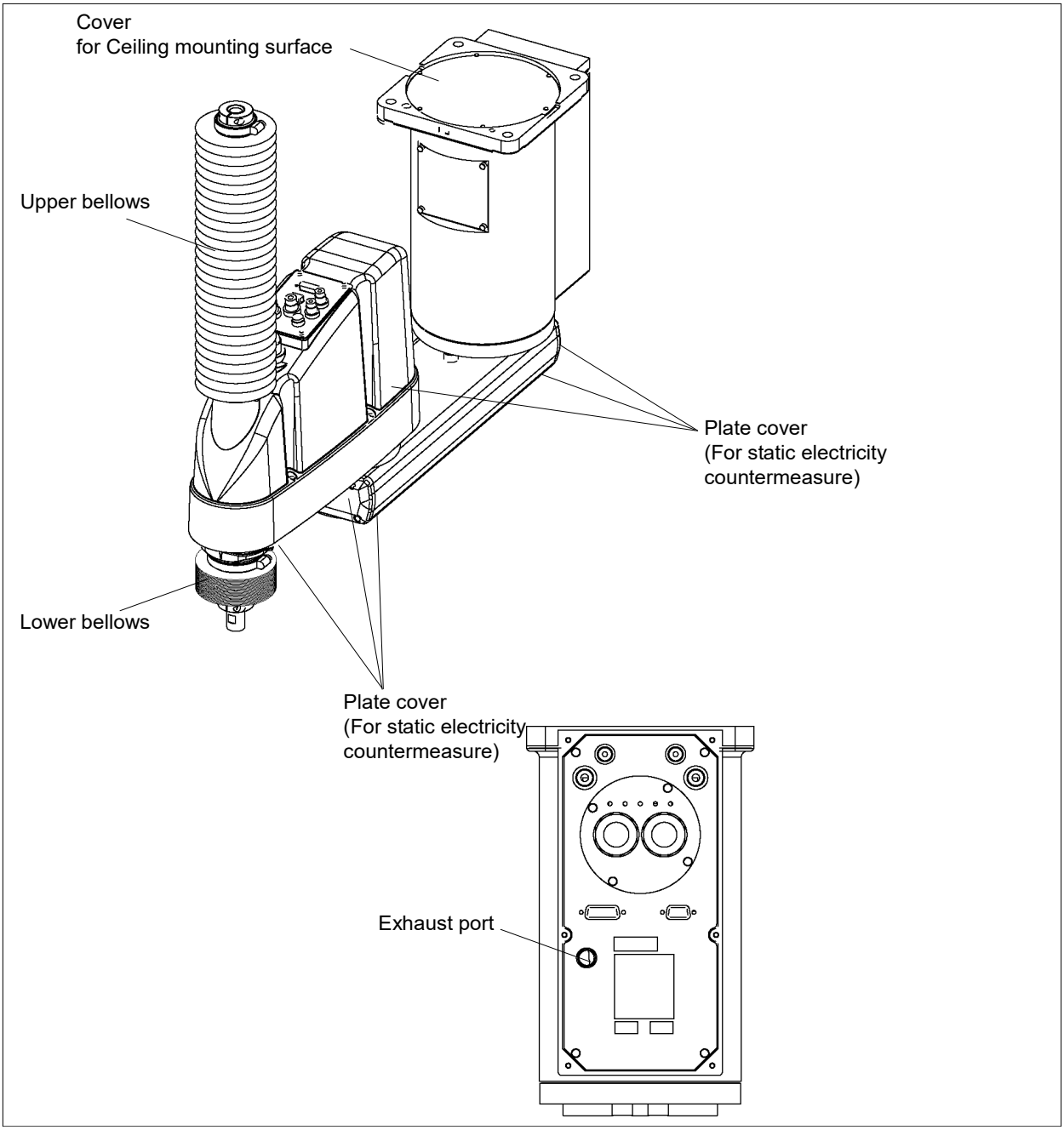

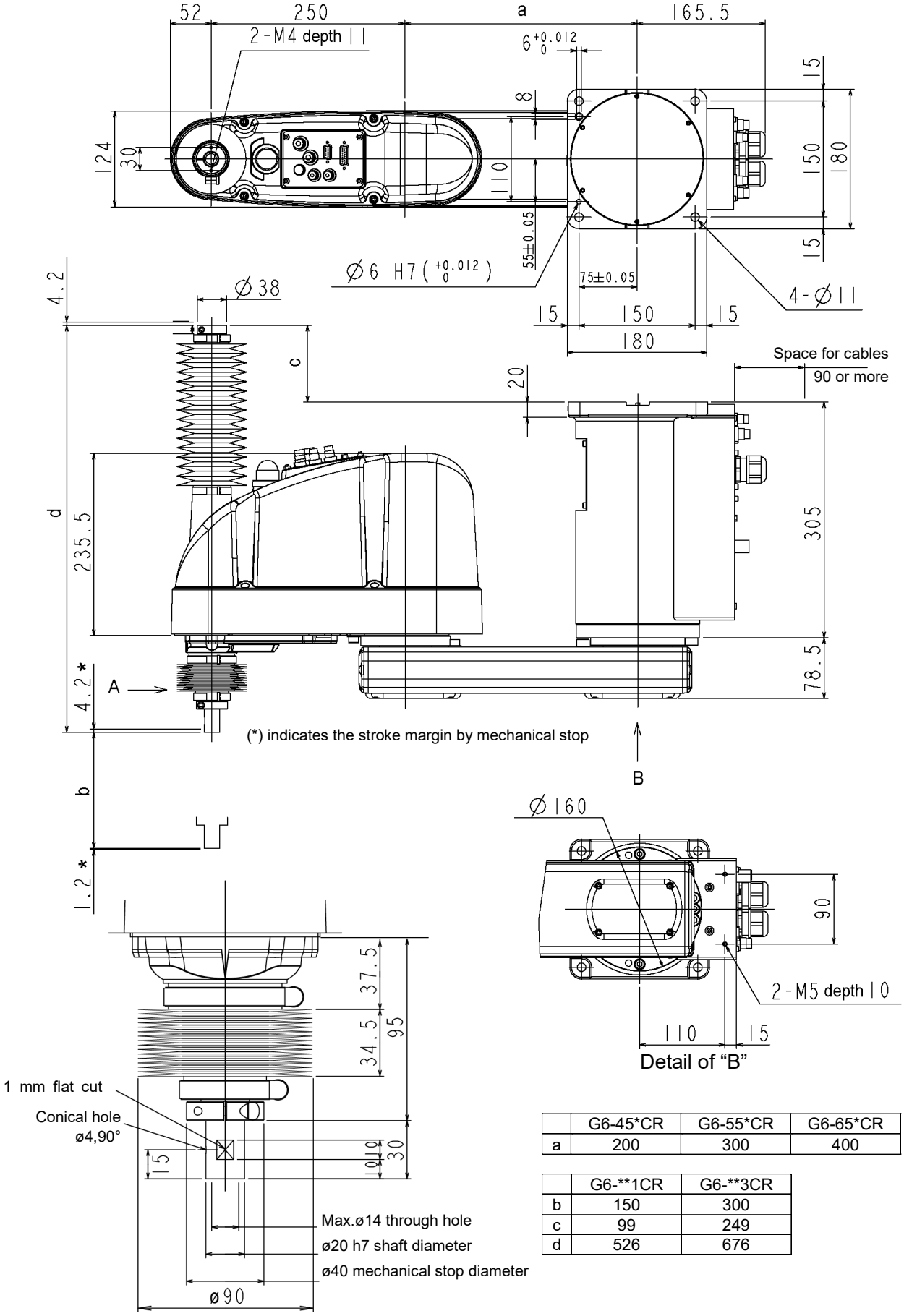

	G6-45*CR	G6-55*CR	G6-65*CR
a	200	300	400

	G6-**1CR	G6-**3CR
b	150	300
c	99	249
d	526	676

Protected-model G6-***DR / PR

The following figure shows the additional parts and specifications for the Ceiling mounting Protected-model when compared with the Standard-model in appearance.

Normal G6-***DR Manipulators do not have bellows. If necessary, select the bellows option at shipment. The following figure is a Manipulator with bellows option.

For dimensions of the end part of G6-***DR without bellows option, refer to G6-***SR.

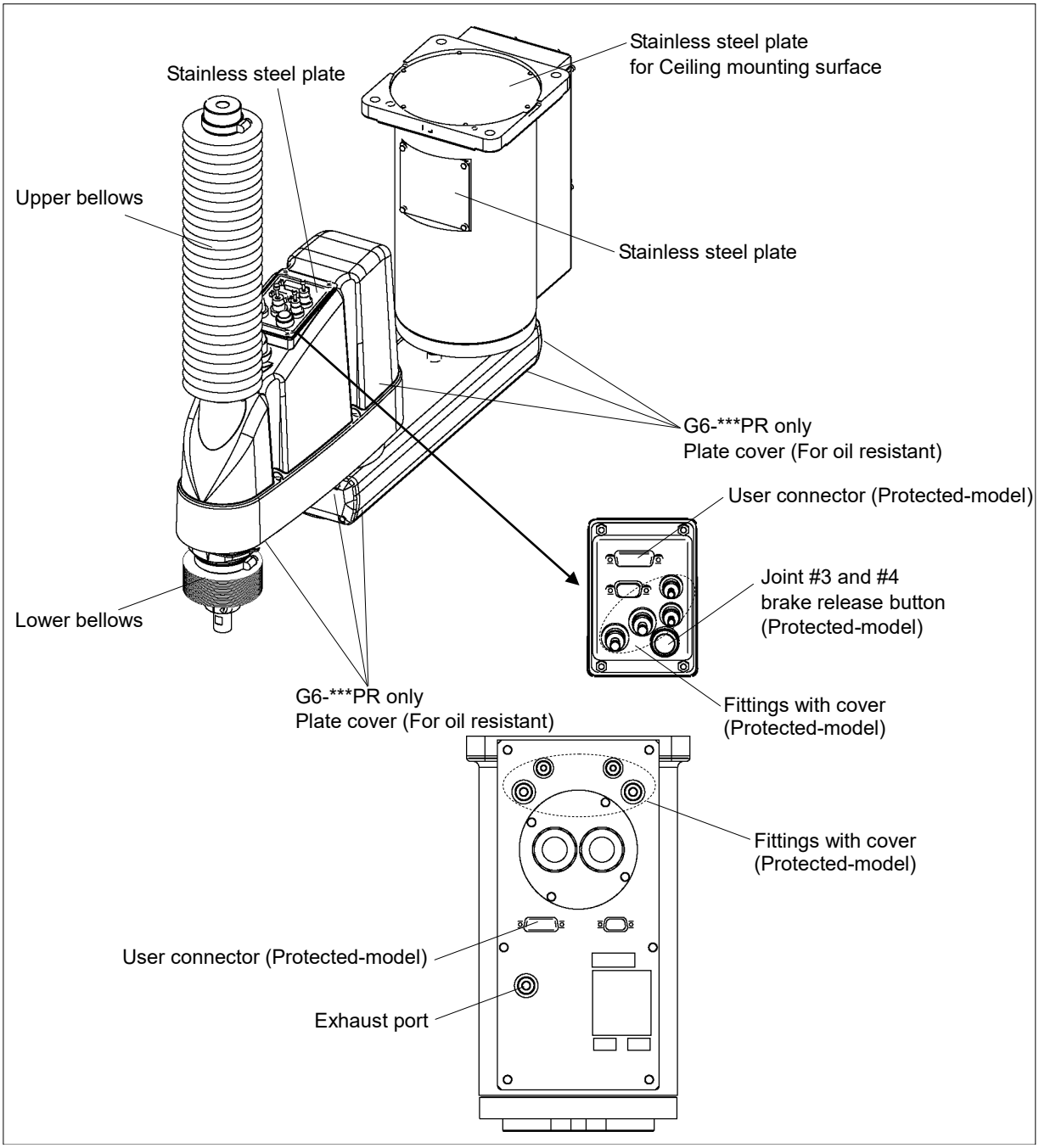

NOTE ☞ For Protected-model, all the screws used for outer parts are stainless steel screws. (Excluding the screw used for mechanical stop.)

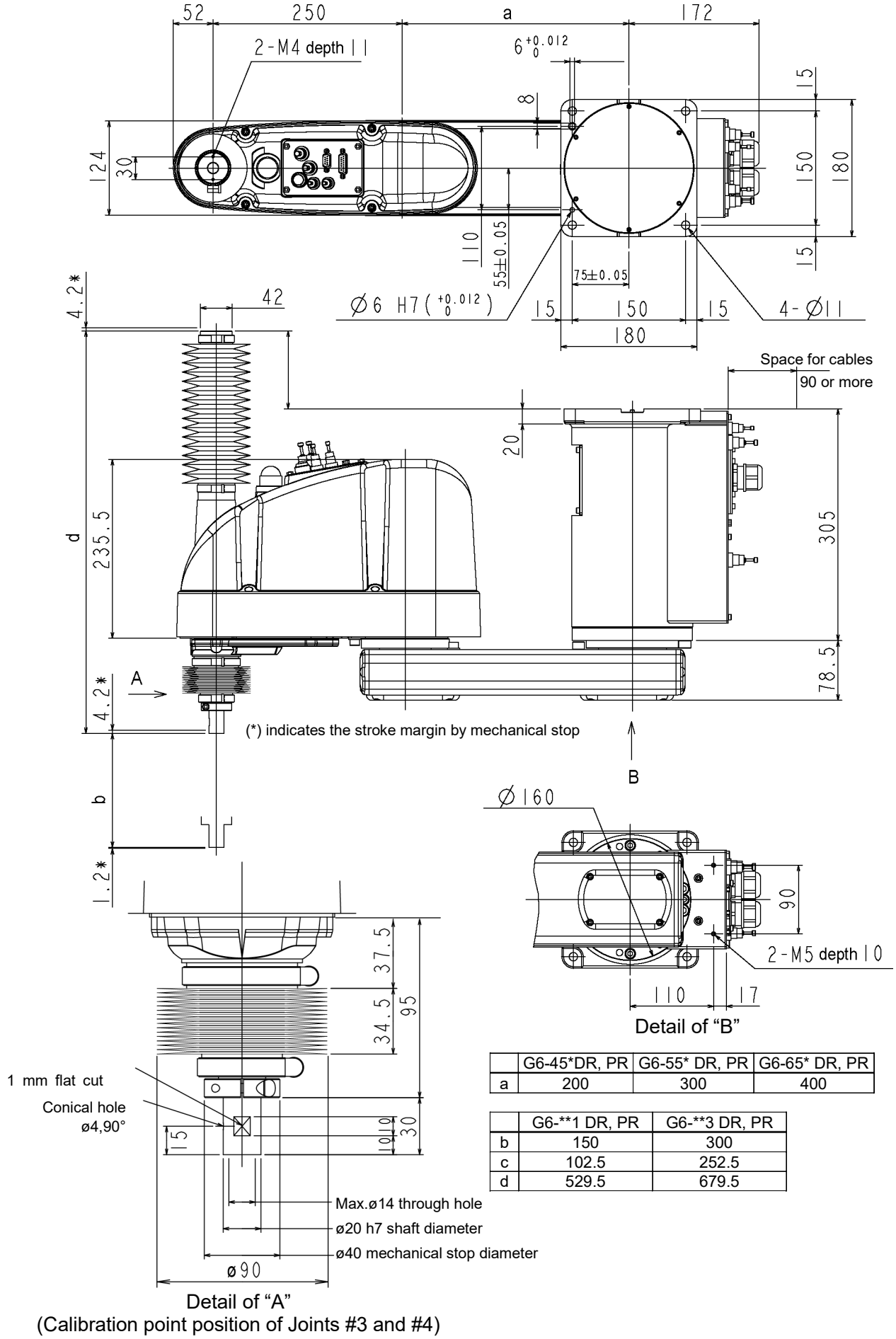

	G6-45*DR, PR	G6-55* DR, PR	G6-65* DR, PR
a	200	300	400

	G6-**1 DR, PR	G6-**3 DR, PR
b	150	300
c	102.5	252.5
d	529.5	679.5

2.3 Specifications

For details of each manipulator specifications, refer to *Appendix A: Specifications.*

2.4 How to Set the Model

The Manipulator model for your system has been set before shipment from the factory.
It is normally not required to change the model when you receive your system.

CAUTION	■ When you need to change the setting of the Manipulator model, be sure to set the Manipulator model properly. Improper setting of the Manipulator model may result in abnormal or no operation of the Manipulator and/or cause safety problems.

NOTE

If the custom specifications number (MT***) is described on MODEL of the signature label (S/N label), the Manipulator has custom specifications. (A label with only the custom specifications number may be attached depending on shipment time.)

The custom specifications may require a different configuration procedure; check the custom specifications number (MT***) and contact the supplier of your region when necessary.

The Manipulator model can be set from software.
Refer to the chapter *Robot Configuration* in the *EPSON RC+ User's Guide*.

3. Environments and Installation

Designing and installation of the Manipulators and robotic equipment shall be performed by personnel who has taken robot system training held by us and suppliers and should conform to all national and local codes.

3.1 Environmental Conditions

A suitable environment is necessary for the robot system to function properly and safely. Be sure to install the robot system in an environment that meets the following conditions:

Item	Conditions
Ambient temperature *1	5 to 40°C
Ambient relative humidity	10 to 80% (no condensation)
First transient burst noise	1 kV or less (Signal wire)
Electrostatic noise	4 kV or less
Altitude	1000 m or lower
Environment	- Install indoors. - Keep away from direct sunlight. - Keep away from dust, oily smoke, salinity, metal powder or other contaminants. - Keep away from flammable or corrosive solvents and gases. - Keep away from water. - Keep away from shocks or vibrations. - Keep away from sources of electric noise. - Keep away from explosive area - Keep away from a large quantity of radiation

NOTE ☞ Manipulators are not suitable for operation in harsh environments such as painting areas, etc. When using Manipulators in inadequate environments that do not meet the above conditions, please contact the supplier of your region.

*1 The ambient temperature conditions are for the Manipulators only. For the Controller the Manipulators are connected to, refer to the Controller manual.

When the product is used in a low temperature environment around the minimum temperature of the product specification, or when the product is suspended for a long time on holidays or at night, a collision detection error may occur due to the large resistance of the drive unit immediately after the start of operation. In such a case, it is recommended to warm up for about 10 minutes.

For the Protected-model Manipulator, be sure to install the robot system in an environment that also meets the following conditions:

Item	Conditions
Environment	- Install indoors. - Keep away from direct sunlight. - Keep away from salinity or other contaminants. - Keep away from flammable or corrosive solvents (including water)*2 and gases. - Keep away from shock or vibration. - Keep away from sources of electric noise. - It can be used under conditions with dust, oily smoke, metal powder or other contaminants. *3 - Keep away from explosive area - Keep away from a large quantity of radiation

*2 The Manipulator body is mainly made of iron and aluminum. It is not rust-proofed. Do not use the Manipulator under conditions where the Manipulator can expose to water or any other corrosive liquid.

*3 Any contaminants that can deteriorate sealing performance of nitrile rubber oil sealing, O-rings, packing seals and liquid gasket should be avoided.

Special Environmental Conditions

The protective seals are attached on the Protected-model Manipulator to prevent dust, water, etc. from the outside. Follow the precautions in use environment described below:

The surface of the Manipulator has general oil resistance. However, if your requirements specify that the Manipulator must withstand certain kinds of oil, please contact the supplier of your region.

Rapid change in temperature and humidity can cause condensation inside the Manipulator.

If your requirements specify that the Manipulator handles food, please contact the supplier of your region to check whether the Manipulator will damage the food or not.

The Manipulator cannot be used in corrosive environments where acid or alkaline is used. In a salty environment where the rust is likely to gather, the Manipulator is susceptible to rust.

The controller used with the Protected-model Manipulator does not have protection features for dusty, wet, or oily environment. The controller must be placed in an environment that meets the specified conditions.

WARNING	■ Use an earth leakage breaker on the AC power cable of the Controller to avoid electric shock and circuit breakdown caused by short circuit. Prepare the earth leakage breaker that pertains the Controller you are using. For details, refer to the Controller manual.

CAUTION	■ When cleaning the Manipulator, do not rub it strongly with alcohol or benzene. It may lose luster on the coated face.

3.2 Base Table

A base table for anchoring the Manipulator is not supplied. Please make or obtain the base table for your Manipulator. The shape and size of the base table differs depending on the use of the robot system. For your reference, we list some Manipulator table requirements here.

The base table must not only be able to bear the weight of the Manipulator but also be able to withstand the dynamic movement of the Manipulator when the Manipulator operates at maximum acceleration /deceleration. Ensure that there is enough strength on the base table by attaching reinforcing materials such as crossbeams.
The torque and reaction force produced by the movement of the Manipulator are as follows:

Max. Reaction torque on the horizontal plate	: 500 N·m
Max. Horizontal reaction force	: 2500 N
Max. Vertical reaction force	: 1500 N

The threaded holes required for mounting the Manipulator base are M8. Use mounting bolts with specifications conforming to ISO898-1 property class: 10.9 or 12.9.
For dimensions, refer to *3.3 Mounting Dimensions*.

The plate for the Manipulator mounting face should be 20 mm thick or more and made of steel to reduce vibration. The surface roughness of the steel plate should be 25 μm or less.

The table must be secured on the floor or wall to prevent it from moving.

The Manipulator installation surface should have a flatness of 0.5 mm or less and an inclination of 0.5 ° or less. If the flatness of the installation surface is improper, the base may be damaged or the robot may not fully show its performance.

When using a leveler to adjust the height of the base table, use a screw with M16 diameter or more.

If you are passing cables through the holes on the base table, see the figures below.

[unit : mm]

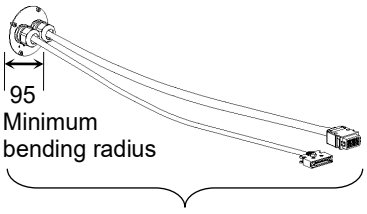

M/C Cables

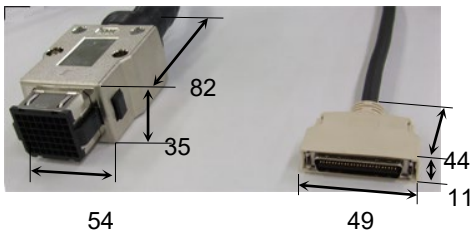

54
Power Cable
Connector (Straight)

49
Signal Cable
Connector

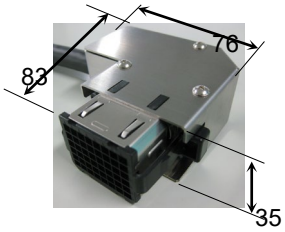

Power Cable
Connector (L-shaped)

NOTE

Do not remove the M/C cables from the Manipulator.

For environmental conditions regarding space when placing the Controller on the base table, refer to the *Controller manual*.

WARNING	■ To ensure safety, a safeguard must be installed for the robot system. For details on the safeguard, refer to the *EPSON RC+ User's Guide*.

3.3 Mounting Dimensions

The maximum space described in figures shows that the radius of the end effector is 60 mm or less. If the radius of the end effector exceeds 60 mm, define the radius as the distance to the outer edge of maximum space.
If a camera or electromagnetic valve extends outside of the arm, set the maximum range including the space that they may reach.

Be sure to allow for the following extra spaces in addition to the space required for mounting the Manipulator, Controller, and peripheral equipment.

Space for teaching

Space for maintenance and inspection
(Ensure a space to open the rear side cover and the maintenance cover for maintenance.)

Space for cables

The minimum bend radius of the power cable is 90 mm. When installing the cable, be sure to maintain sufficient distance from obstacles. In addition, leave enough space for other cables so that they are not bent forcibly.

Ensure distance to the safeguard from the maximum motion range is more than 100 mm.

Table Top Mounting

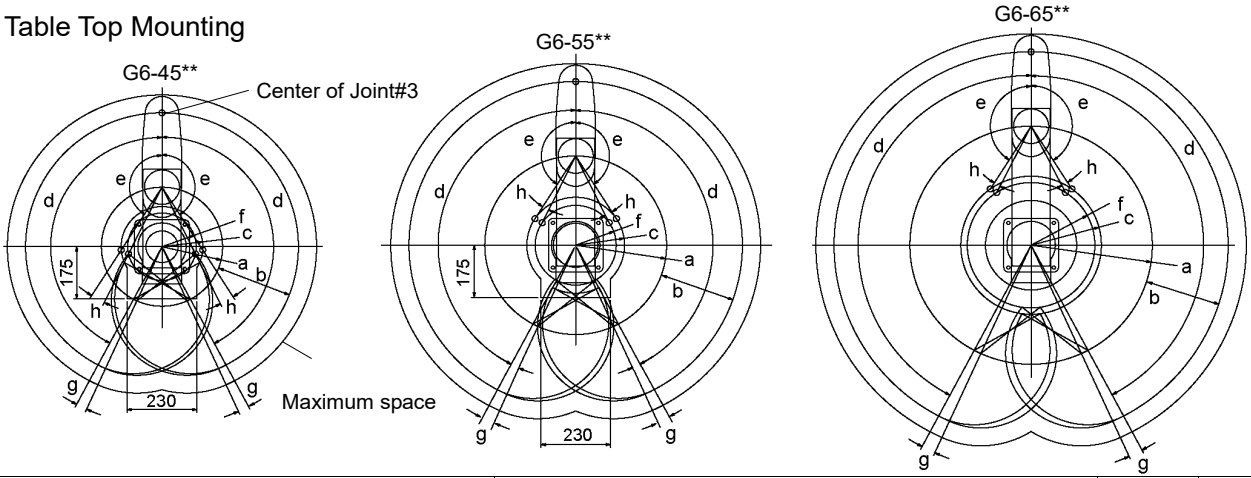

		G6-45*				G6-55**	G6-65**
		S, D		C, P, D bellows			
a	Length of Arm #1 (mm)	200				300	400
b	Length of Arm #2 (mm)	250				250	250
c	(Motion range)	Z : 0 to –270	134.8	Z : 0 to –240	134.8	161.2	232
		Z : –270 to –330	143.5	Z : –240 to –300	153.9		
d	Motion range of Joint #1 (degree)	152				152	152
e	Motion range of Joint #2 (degree)	Z : 0 to –270	147.5	Z : 0 to –240	147.5	147.5	147.5
		Z : –270 to –330	145	Z : –240 to –300	142		
f	(Mechanical stop area)	124.4				133.8	207.5
g	Joint #1 angle to hit mechanical stop (degree)	3.5				3.5	3.5
h	Joint #2 angle to hit mechanical stop (degree)	Z : 0 to –270	3	Z : 0 to –270	3	6.3	6.3
		Z : –270 to –330	5.5	Z : –270 to –330	8.5		

The bellows for G6-***D are options at shipment.

NOTE
In the range Z: -270 to -330 mm (G6-45*S*, D*), and Z: -240 to -300 mm (G6-45*C*, P*, D* bellows), the area is limited by interference of the Manipulator body and the arm.

Wall Mounting

G6-45**W

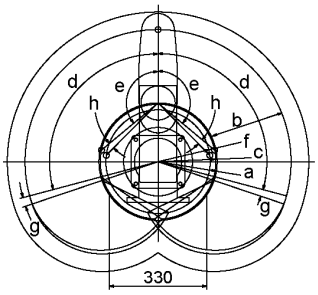

G6-55**W

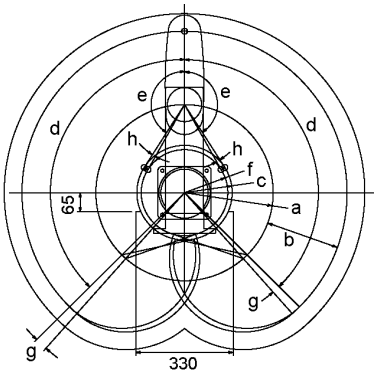

G6-65**W

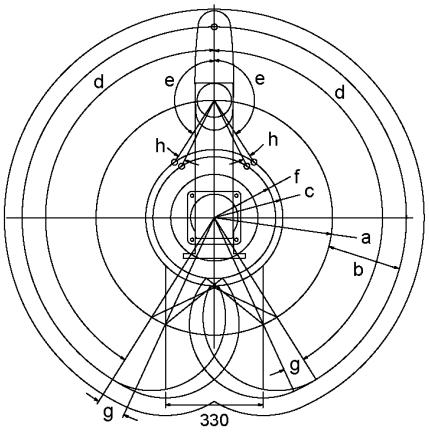

		G6-45**W	G6-55*		G6-65**W
			SW, DW	CW, PW, DW bellows	
a	Length of Arm #1 (mm)	200	300		400
b	Length of Arm #2 (mm)	250	250		250
c	(Motion range)	195.5	161.2	172.1	232
d	Motion range of Joint #1 (degree)	105	135		148
e	Motion range of Joint #2 (degree)	130	147.5	145	147.5
f	(Mechanical stop area)	182.4	146.8		207.5
g	Joint #1 angle to hit mechanical stop (degree)	3.5	3.5		7.5
h	Joint #2 angle to hit mechanical stop (degree)	3.8	3.3	5.8	6.3

The bellows for G6-***DW are options at shipment.

Ceiling Mounting

G6-45**R

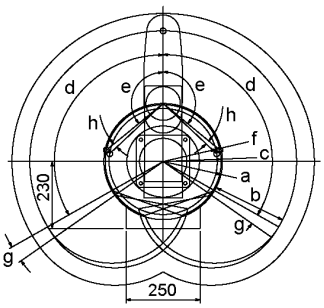

G6-55**R

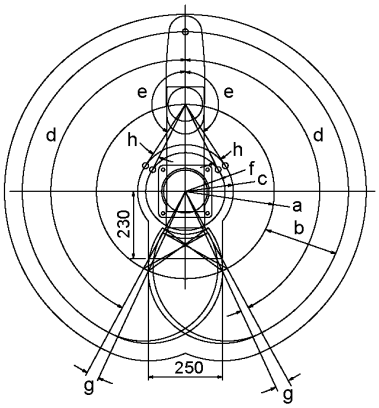

G6-65**R

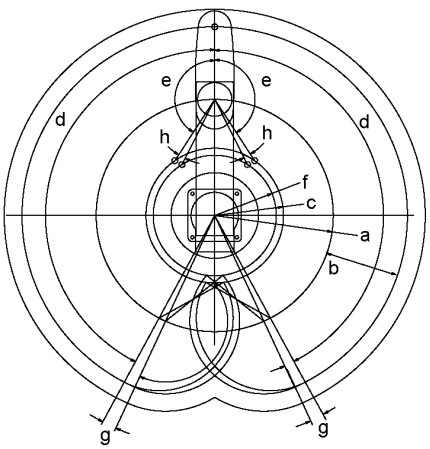

		G6-45**R	G6-55*		G6-65**R
			SR, DR	CR, PR, DR bellows	
a	Length of Arm #1 (mm)	200	300		400
b	Length of Arm #2 (mm)	250	250		250
c	(Motion range)	195.5	161.2	172.1	232
d	Motion range of Joint #1 (degree)	120	152		152
e	Motion range of Joint #2 (degree)	130	147.5	145	147.5
f	(Mechanical stop area)	182.4	146.8		207.5
g	Joint #1 angle to hit mechanical stop (degree)	5.5	3.5		3.5
h	Joint #2 angle to hit mechanical stop (degree)	3.8	3.3	5.8	6.3

The bellows for G6-***DR are options at shipment.

3.4 Unpacking and Transportation

Transportation, and relocation shall be performed by personnel who has taken robot system training held by us and suppliers and should conform to all national and local codes.

WARNING	■ Only authorized personnel should perform sling work and operate a crane and a forklift. When these operations are performed by unauthorized personnel, it is extremely hazardous and may result in serious bodily injury and/or severe equipment damage to the robot system.

CAUTION

■ Using a cart or similar equipment, transport the Manipulator in the same manner as it was delivered.

■ After removing the bolts securing the Manipulator to the delivery equipment, the Manipulator can fall. Be careful not to get hands or fingers caught.

■ The arm is secured with a wire tie. Leave the wire tie secured until you finish the installation so as not to get hands or fingers caught.

■ To carry the Manipulator, have two or more people to work on it and secure the Manipulator to the delivery equipment or hold the areas indicated in gray in the figure (bottom of Arm #1 and bottom of the base) by hand.
When holding the bottom of the base by hand, be very careful not to get your hands or fingers caught.

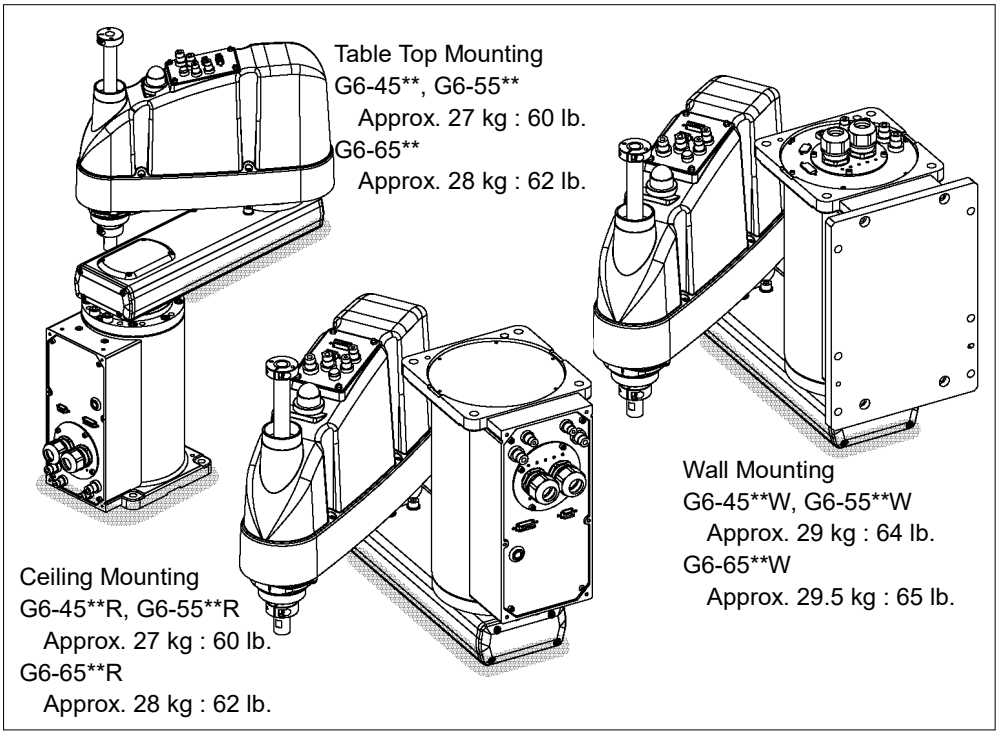

■ Stabilize the Manipulator with your hands when hoisting it.

■ When transporting the Manipulator for a long distance, secure it to the delivery equipment directly so that the Manipulator never falls.
If necessary, pack the Manipulator in the same style as it was delivered.

3.5 Installation

The installation shall be made by personnel who has taken robot system training held by us and suppliers and should conform to all national and local codes.

CAUTION	■ The robot system must be installed to avoid interference with buildings, structures, utilities, other machines and equipment that may create a trapping hazard or pinch points. ■ Vibration (resonance) may occur during operation depending on rigidity of the installation table. If the vibration occurs, improve rigidity of the table or change the speed or acceleration and deceleration settings.

The following sections describe the installation of the Standard Manipulator.

3.5.1 Table Top Mounting
3.5.2 Wall Mounting
3.5.3 Ceiling Mounting

When the Manipulator is a Cleanroom-model or Protected-model, refer to each section.

3.5.4 Cleanroom-model
3.5.5 Protected-model

3.5.1 Table Top Mounting

CAUTION	■ Install the Table Top Mounting Manipulator with two or more people. The Manipulator weights are as follows. Be careful not to get hands, fingers, or feet caught and/or have equipment damaged by a fall of the Manipulator. G6-45** : Approximately 27 kg: 60 lb. G6-55** : Approximately 27 kg: 60 lb. G6-65** : Approximately 28 kg: 62 lb.

Standard-model

(1) Secure the base to the base table with four bolts.

NOTE
Use bolts with specifications conforming to ISO898-1 Property Class: 10.9 or 12.9.

Tightening torque:
32.0 N·cm (326 kgf·cm)

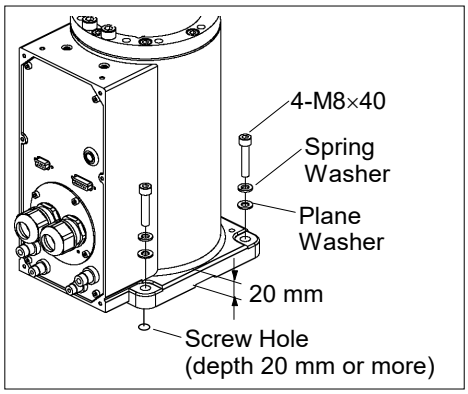

(2) Using nippers, cut off the wire tie binding the shaft and arm retaining bracket on the base.

(3) Remove the bolts securing the wire ties removed in step (2).

(4) Remove the fixing jig for transport.

(5) When the Joint #2 mechanical stop has a protective part (made of rubber):
Remove the protective part.

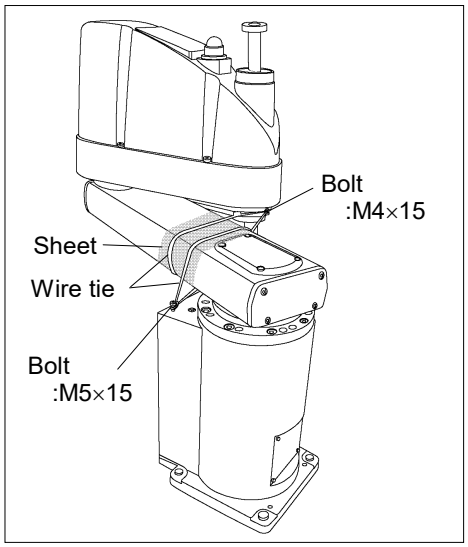

3.5.2 Wall Mounting

WARNING	■ Install the Wall Mounting Manipulator with two or more people. The Manipulator weights are as follows. Be careful not to get hands, fingers, or feet caught and/or have equipment damaged by a fall of the Manipulator. G6-45**W : Approximately 29 kg: 64 lb. G6-55**W : Approximately 29 kg: 64 lb. G6-65**W : Approximately 29.5 kg: 65 lb. ■ When installing the Manipulator to the wall, support the Manipulator, and then secure the anchor bolts. Removing the support without securing the anchor bolts properly is extremely hazardous and may result in fall of the Manipulator.

Standard-model

(1) Unpack the manipulator with retaining the arm posture.

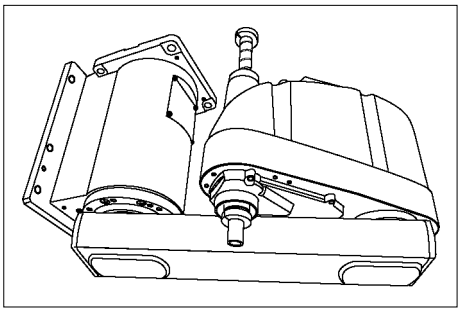

(2) Secure the base to the wall with six bolts.

NOTE

Use bolts with specifications conforming to ISO898-1 Property Class: 10.9 or 12.9.

Tightening torque:
32.0 N·cm (326 kgf·cm)

(3) Remove the fixing jig for transport.

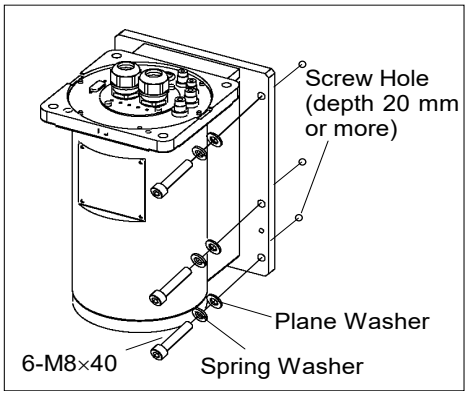

3.5.3 Ceiling Mounting

WARNING	■ Install the Ceiling Mounting Manipulator with two or more people. The Manipulator weights are as follows. Be careful not to get hands, fingers, or feet caught and/or have equipment damaged by a fall of the Manipulator. G6-45**R : Approximately 27 kg: 60 lb. G6-55**R : Approximately 27 kg: 60 lb. G6-65**R : Approximately 28 kg: 62 lb. ■ When installing the Manipulator to the ceiling, support the Manipulator, and then secure the anchor bolts. Removing the support without securing the anchor bolts properly is extremely hazardous and may result in fall of the Manipulator.

Standard-model

(1) Unpack the manipulator with retaining the arm posture.

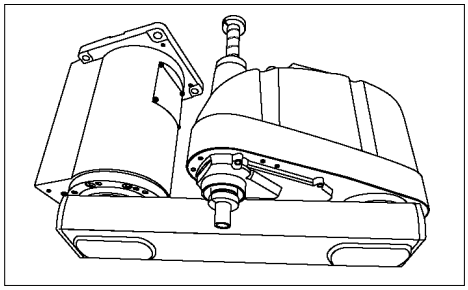

(2) Secure the base to the ceiling with four bolts.

NOTE Use bolts with specifications conforming to ISO898-1 Property Class: 10.9 or 12.9.

Tightening torque:
32.0 N·cm (326 kgf·cm)

(3) Remove the fixing jig for transport.

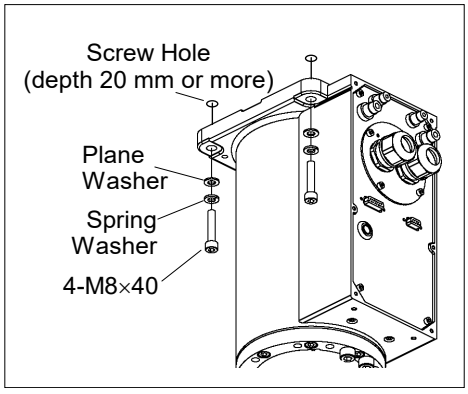

3.5.4 Cleanroom-model

(1) Unpack the Manipulator outside of the clean room.

(2) Secure the Manipulator to delivery equipment such as a pallet with bolts so that the Manipulator does not fall over.

(3) Wipe off the dust on the Manipulator with a little alcohol or distilled water on a lint-free cloth.

(4) Transport the Manipulator into the cleanroom.

(5) Refer to the installation procedure of each Manipulator model and install the Manipulator.

(6) Connect an exhaust tube to the exhaust port.

3.5.5 Protected-model

Refer to the installation procedure of each Manipulator model and install the Manipulator. When the Manipulator is a Protected-model, be aware of the followings.

WARNING	■ Connect the power cable connection and the signal cable connector to the Manipulator immediately after the Manipulator installation. The Manipulator without connecting them may result in electric shock and/or malfunction of the robot system as it cannot ensure IP54 / IP65.

CAUTION	■ When operating the Manipulator under special environmental conditions (adverse conditions with dust and oily smoke), do not place the controller in the same condition since the controller does not comply with IP54 / IP65. Doing so may cause equipment damage to and/or malfunction of the controller.

3.6 Connecting the Cables

WARNING	■ To shut off power to the robot system, disconnect the power plug from the power source. Be sure to connect the AC power cable to a power receptacle. DO NOT connect it directly to a factory power source. ■ Before performing any replacement procedure, turn OFF the Controller and related equipment, and then disconnect the power plug from the power source. Performing any replacement procedure with the power ON is extremely hazardous and may result in electric shock and/or malfunction of the robot system. ■ Be sure to connect the cables properly. Do not allow unnecessary strain on the cables. (Do not put heavy objects on the cables. Do not bend or pull the cables forcibly.) The unnecessary strain on the cables may result in damage to the cables, disconnection, and/or contact failure. Damaged cables, disconnection, or contact failure is extremely hazardous and may result in electric shock and/or improper function of the robot system. ■ Grounding the manipulator is done by connecting with the controller. Ensure that the controller is grounded and the cables are correctly connected. If the ground wire is improperly connected to ground, it may result in the fire or electric shock.

CAUTION	■ When connecting the Manipulator to the Controller, make sure that the serial numbers on each equipment match. Improper connection between the Manipulator and Controller may not only cause improper function of the robot system but also serious safety problems. The connection method varies with the Controller used. For details on the connection, refer to the *Controller manual*. If the G series Manipulator is connected to the Controller for the 6-axis robot, it may result in malfunction of the Manipulator.

When the Manipulator is a Cleanroom-model, be aware of the followings.

When the Manipulator is a Cleanroom-model, use it with an exhaust system.
For details, refer to *Appendix A:Specifications.*

When the Manipulator is a Protected-model, be aware of the followings.

WARNING	■ Connect the power cable connection and the signal cable connector to the Manipulator immediately after the Manipulator installation. The Manipulator without connecting them may result in electric shock and/or malfunction of the robot system as it cannot ensure IP54 / IP65.

CAUTION	■ When operating the Manipulator under special environmental conditions (adverse conditions with dust and oily smoke), do not place the controller in the same condition since the controller does not comply with IP54 / IP65. Doing so may cause equipment damage to and/or malfunction of the controller.

Cable Connections

Connect the power connector and signal connector of the M/C cables to the Controller.

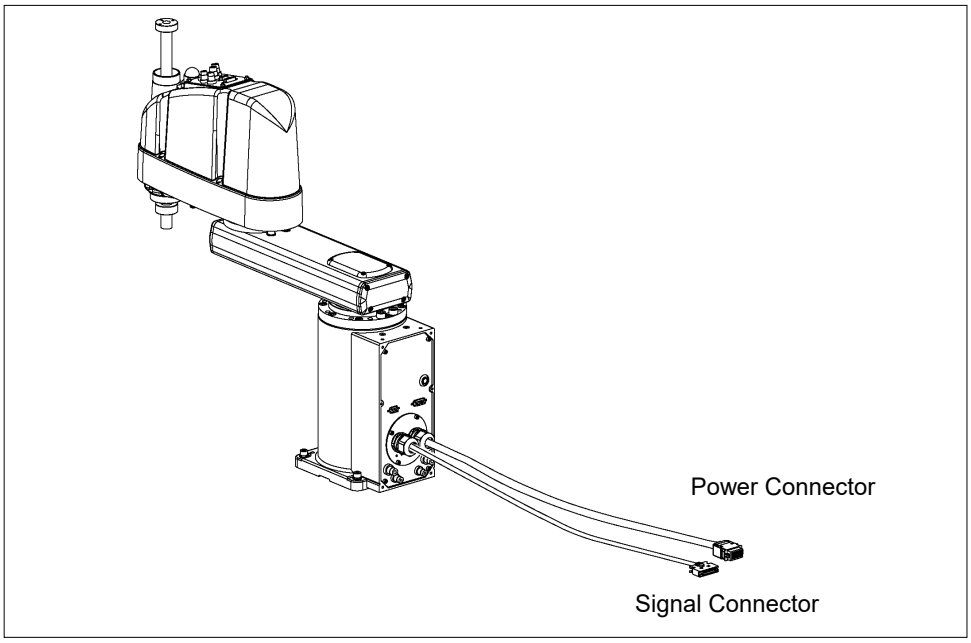

3.7 User Wires and Pneumatic Tubes

CAUTION	■ Only authorized or certified personnel should be allowed to perform wiring. Wiring by unauthorized or uncertified personnel may result in bodily injury and/or malfunction of the robot system.

User electrical wires and pneumatic tubes are contained in the cable unit.

Electrical Wires

Rated Voltage	Allowable Current	Wires	Nominal Sectional Area	Outer Diameter	Note
AC/DC30 V	1 A	24	0.211 mm^2	ø8.3±0.3mm	Shielded

		Maker	Standard	
15 pin	Suitable Connector	JAE	DA-15PF-N	(Solder type)
	Clamp Hood	JAE	DA-C8-J10-F2-1R	(Connector setscrew: #4-40 NC)
9 pin	Suitable Connector	JAE	DE9PF-N	(Solder type)
	Clamp Hood	JAE	DE-C8-J9-F2-1R	(Connector setscrew: #4-40 NC)

Pins with the same number, indicated on the connectors on both ends of the cables, are connected.

Pneumatic Tubes

Max. Usable Pneumatic Pressure	Pneumatic Tubes	Outer Diameter × Inner Diameter
0.59 MPa (6 kgf/cm^2 : 86 psi)	2	ø6 mm × ø4 mm
	2	ø4 mm × ø2.5 mm

Fittings for ø6 mm and ø4 mm (outer diameter) pneumatic tubes are supplied on both ends of the pneumatic tubes.

When the Manipulator is a Protected-model, be aware of the followings.

CAUTION	■ Be sure to use IP54 or IP65 compliant wires and tubes when using the Manipulator under special environmental conditions (adverse condition with dust and oily smoke). Using unprotected wires and tubes may cause equipment damage to and/or malfunction of the Manipulator as proper operation of the Manipulator under the conditions is no more guaranteed. ■ Be sure to attach the cap on the user cable connector when not using the connector. Using the Manipulator without the cap may cause equipment damage to and/or malfunction of the Manipulator as dust or oily smoke gets into the connector.

Common Parts

* Color differs depending on the shipment time

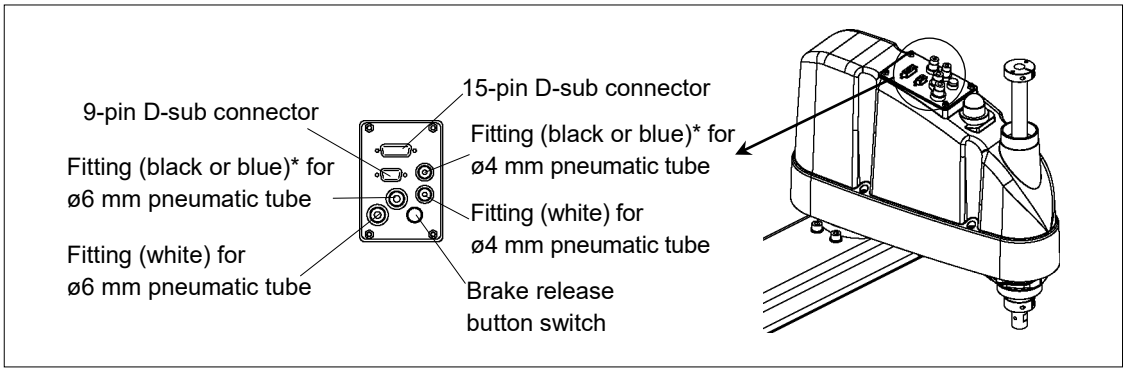

Table Top Mounting

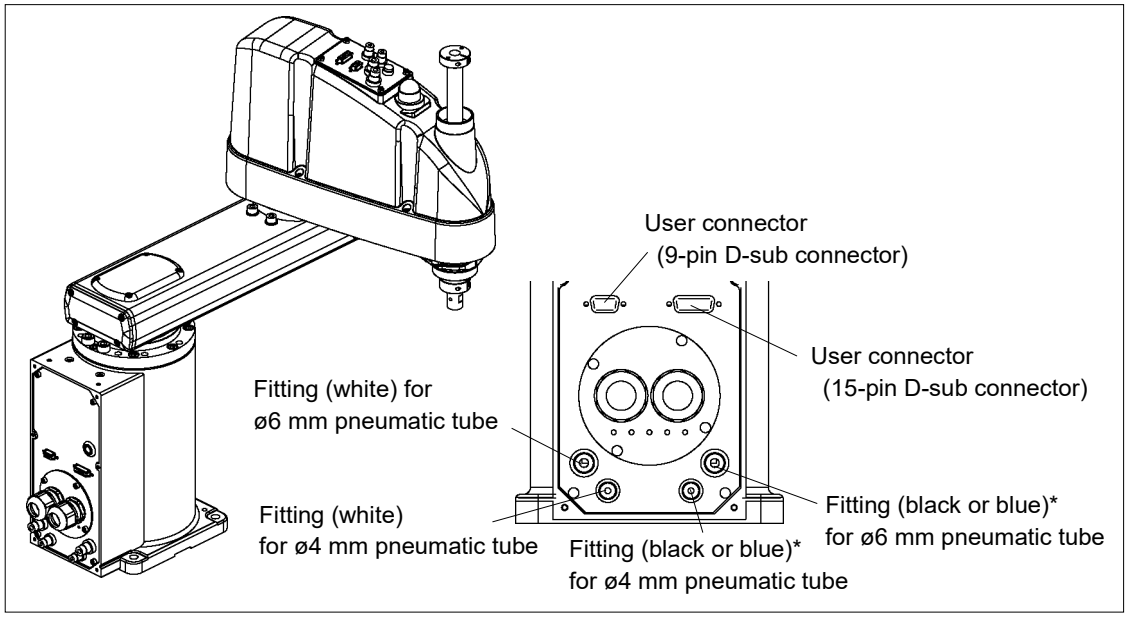

Wall Mounting

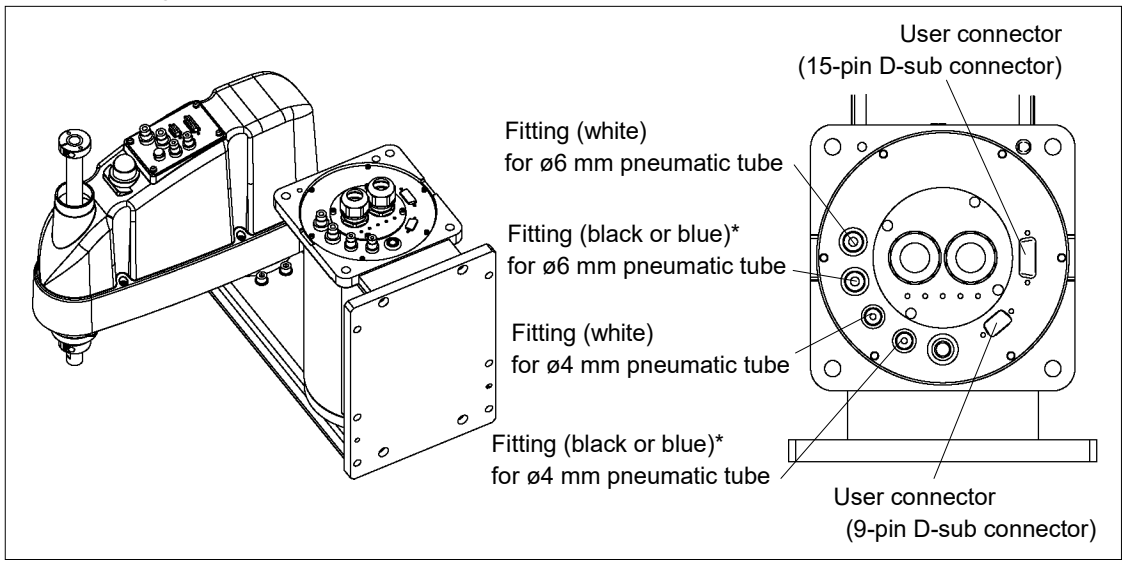

Ceiling Mounting

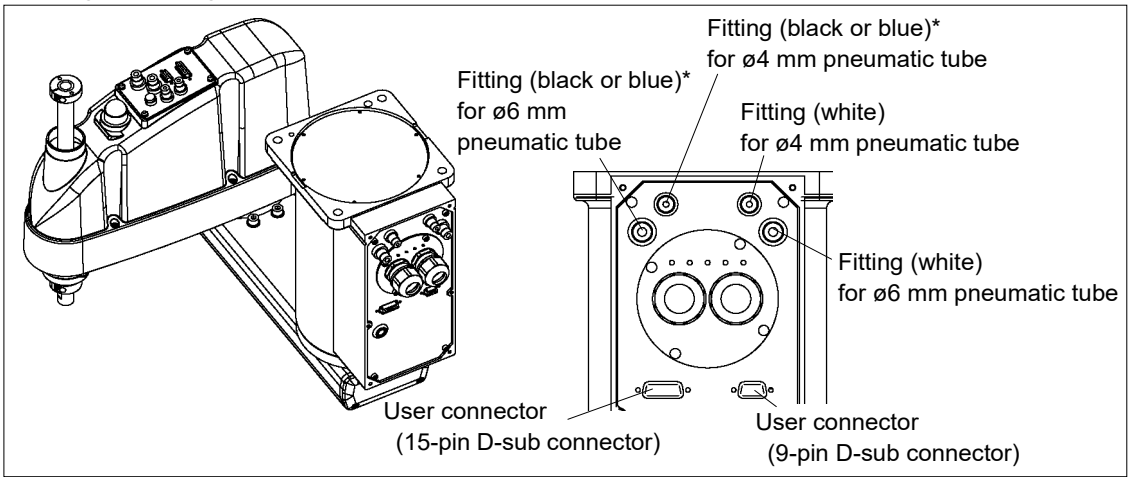

3.8 Relocation and Storage

3.8.1 Precautions for Relocation and Storage

Observe the following when relocating, storing, and transporting the Manipulators.

The installation shall be made by personnel who has taken robot system training held by us and suppliers and should conform to all national and local codes.

WARNING	■ Only authorized personnel should perform sling work and operate a crane and a forklift. When these operations are performed by unauthorized personnel, it is extremely hazardous and may result in serious bodily injury and/or severe equipment damage to the robot system.

CAUTION	■ Before relocating the Manipulator, fold the arm and secure it tightly with a wire tie to prevent hands or fingers from being caught in the Manipulator. ■ When removing the anchor bolts, support the Manipulator to prevent falling. Removing the anchor bolts without support may result in a fall of the Manipulator, and then get hands, fingers, or feet caught. ■ To carry the Manipulator, have two or more people to work on it and secure the Manipulator to the delivery equipment or hold the bottom of Arm #1, the bottom of the main cable fitting, and the bottom of the base by hand. When holding the bottom of the base by hand, be very careful not to get hands or fingers caught. ■ Stabilize the Manipulator with your hands when hoisting it. Unstable hoisting is extremely hazardous and may result in fall of the Manipulator.

When transporting the Manipulator for a long distance, secure it to the delivery equipment so that the Manipulator cannot fall.
If necessary, pack the Manipulator in the same way as it was delivered.

When the Manipulator is used for a robot system again after long-term storage, perform a test run to verify that it works properly, and then operate it thoroughly.

Transport and store the Manipulator in the range of Temperature: –20 to +60°C, Humidity: 10 to 90% (no condensation).

When condensation occurs on the Manipulator during transport or storage, turn ON the power only after the condensation dries.

Do not shock or shake the Manipulator during transport.

3.8.2 Table Top Mounting

CAUTION	■ Install or relocate the Table Top Mounting Manipulator with two or more people. The Manipulator weights are as follows. Be careful not to get hands, fingers, or feet caught and/or have equipment damaged by a fall of the Manipulator. G6-45** : Approximately 27 kg: 60 lb. G6-55** : Approximately 27 kg: 60 lb. G6-65** : Approximately 28 kg: 62 lb.

(1) Turn OFF the power on all devices and unplug the cables.

NOTE

Remove the mechanical stops if using them to limit the motion range of Joints #1 and #2. For details on the motion range, refer to *5.2 Motion Range Setting by Mechanical Stops*.

(2) Cover the arm with a sheet so that the arm will not be damaged.
Tie the lower end of the shaft and arm, and the base and arm together with a wire tie.
Be careful not to tie them too tight. Otherwise, the shaft may bend.

Example of Arm Retaining Posture

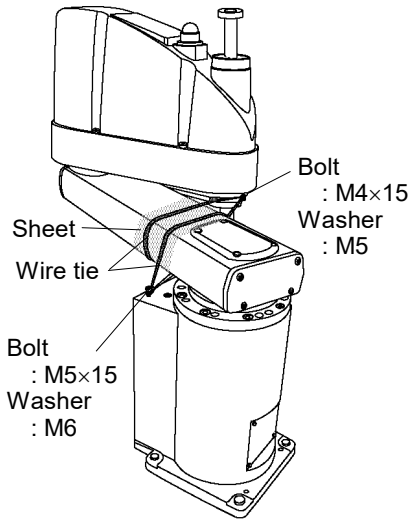

(3) Hold the bottom of Arm #1 by hand to unscrew the anchor bolts.
Then, remove the Manipulator from the base table.

3.8.3 Wall Mounting

WARNING	■ Install or relocate the Wall Mounting Manipulator with two or more people. The Manipulator weights are as follows. Be careful not to get hands, fingers, or feet caught and/or have equipment damaged by a fall of the Manipulator. G6-45**W : Approximately 29 kg: 64 lb. G6-55**W : Approximately 29 kg: 64 lb. G6-65**W : Approximately 29.5 kg: 65 lb. ■ When removing the Manipulator from the wall, support the Manipulator, and then remove the anchor bolts. Removing the anchor bolts without supporting is extremely hazardous and may result in fall of the Manipulator.

(1) Turn OFF the power on all devices and unplug the cables.

NOTE

Remove the mechanical stops if using them to limit the motion range of Joints #1 and #2. For details on the motion range, refer to *5.2 Motion Range Setting by Mechanical Stops*.

(2) Cover the arm with a sheet so that the arm will not be damaged.
Refer to the figure below and bind the shaft and arm retaining bracket on the base.

Example of Arm Retaining Posture

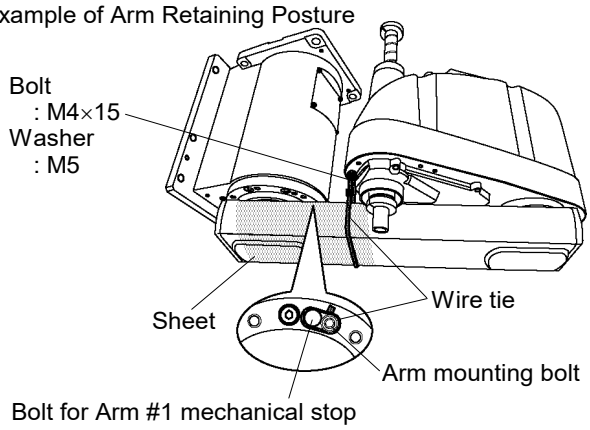

(3) Hold the bottom of Arm #1 by hand to unscrew the anchor bolts. Then, remove the Manipulator from the wall.

G6-45**

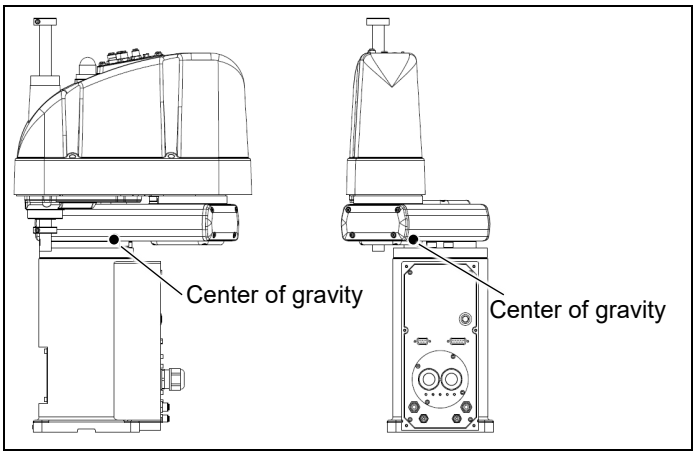

G6-55**

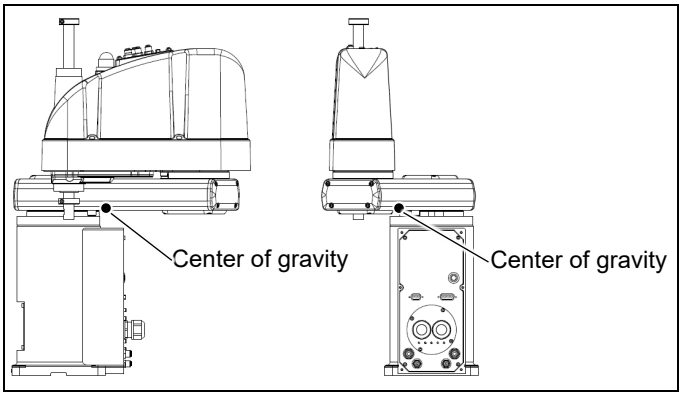

G6-65**

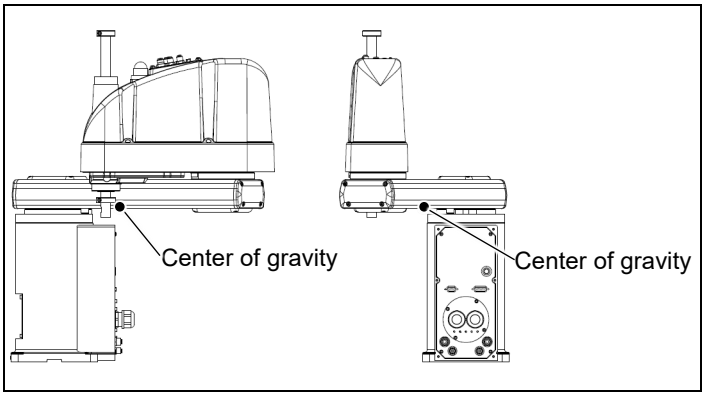

3.8.4 Ceiling Mounting

WARNING	■ Install or relocate the Ceiling Mounting Manipulator with two or more people. The Manipulator weights are as follows. Be careful not to get hands, fingers, or feet caught and/or have equipment damaged by a fall of the Manipulator. G6-45**R : Approximately 27 kg: 60 lb. G6-55**R : Approximately 27 kg: 60 lb. G6-65**R : Approximately 28 kg: 62 lb. ■ When removing the Manipulator from the ceiling, support the Manipulator, and then remove the anchor bolts. Removing the anchor bolts without supporting is extremely hazardous and may result in fall of the Manipulator.

(1) Turn OFF the power on all devices and unplug the cables.

NOTE

Remove the mechanical stops if using them to limit the motion range of Joints #1 and #2. For details on the motion range, refer to *5.2 Motion Range Setting by Mechanical Stops*.

(2) Cover the arm with a sheet so that the arm will not be damaged.
Refer to the figure below and bind the shaft and arm retaining bracket on the base.

Example of Arm Retaining Posture

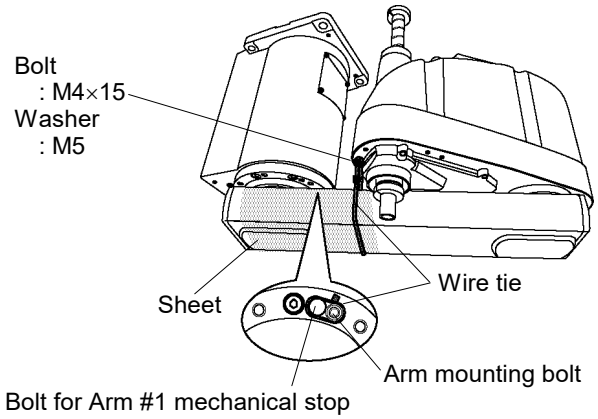

(3) Hold the bottom of Arm #1 by hand to unscrew the anchor bolts. Then, remove the Manipulator from the ceiling.

G6-45**W

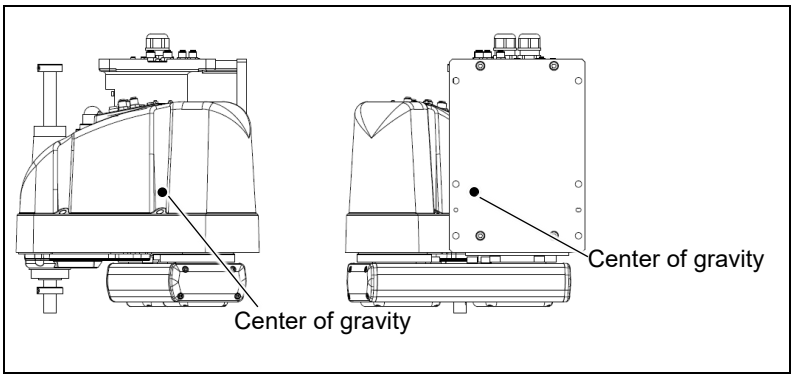

G6-55**W

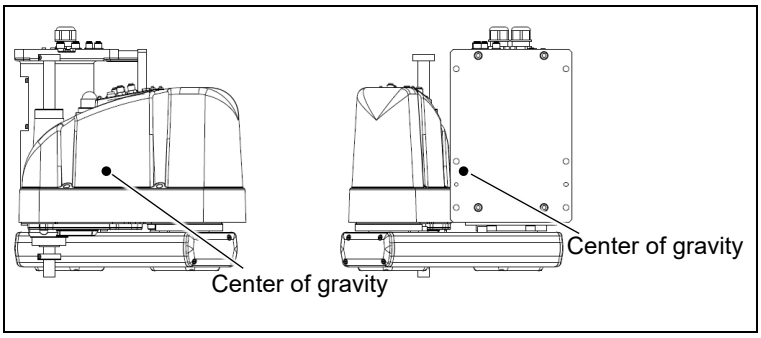

G6-65**W

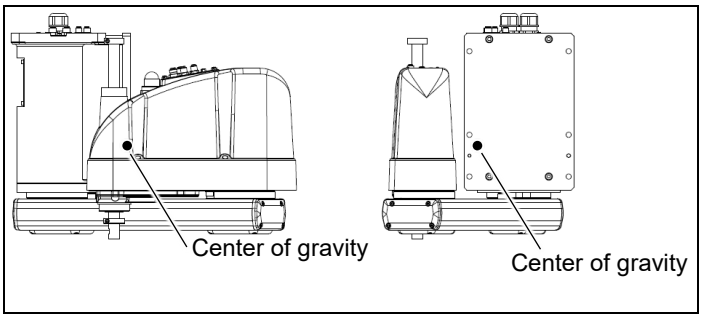

4. Setting of End Effectors

4.1 Attaching an End Effector

Users are responsible for making their own end effector(s). Before attaching an end effector, observe these guidelines. For details of attaching an end effector, *Hand Function Manual.*

CAUTION	■ If you use an end effector equipped with a gripper or chuck, connect wires and/or pneumatic tubes properly so that the gripper does not release the work piece when the power to the robot system is turned OFF. Improper connection of the wires and/or pneumatic tubes may damage the robot system and/or work piece as the work piece is released when the Emergency Stop switch is pressed. I/O outputs are configured at the factory so that they are automatically shut off (0) by power disconnection, the Emergency Stop switch, or the safety features of the robot system. However, the I/O set in the hand function does not turn off (0) when the Reset command is executed or in emergency stop.

Shaft

- Attach an end effector to the lower end of the shaft.
  For the shaft dimensions, and the overall dimensions of the Manipulator, refer to *2. Specifications*.
- Do not move the upper limit mechanical stop on the lower side of the shaft. Otherwise, when "Jump motion" is performed, the upper limit mechanical stop may hit the Manipulator, and the robot system may not function properly.
- Use a split muff coupling with an M4 bolt or larger to attach the end effector to the shaft.

Brake release switch

- Joints #3 and #4 (G6-**3**) cannot be moved up/down by hand because the electromagnetic brake is applied to the joints while power to the robot system is turned OFF. This prevents the shaft from hitting peripheral equipment and rotating in the case that the shaft is lowered by the weight of the end effector when the power is disconnected during operation, or when the motor is turned OFF even though the power is turned ON.

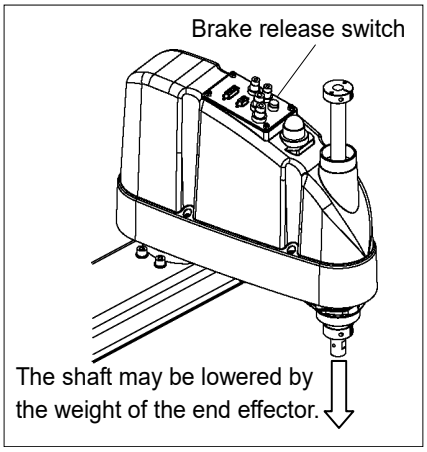

  To move Joint #3 up/down or rotate Joint #4 (G6-**3**) while attaching an end effector, turn ON the Controller and move the joint up/down or rotate the joint while pressing the brake release switch.
  This button switch is a momentary-type; the brake is released only while the button switch is being pressed.
  The respective brakes for Joints #3 and #4 (G6-**3**) are released simultaneously.
- Be careful of the shaft falling and rotating while the brake release switch is being pressed because the shaft may be lowered by the weight of the end effector.
- For G6-**1**, Joint #4 has no brake on it.

Layouts

- When you operate the manipulator with an end effector, the end effector may interfere with the Manipulator because of the outer diameter of the end effector, the size of the work piece, or the position of the arms. When designing your system layout, pay attention to the interference area of the end effector.

4.2 Attaching Cameras and Valves

Arm #2 has threaded holes as shown in the figure below. Use these holes for attaching cameras, valves, and other equipment. [Unit: mm]

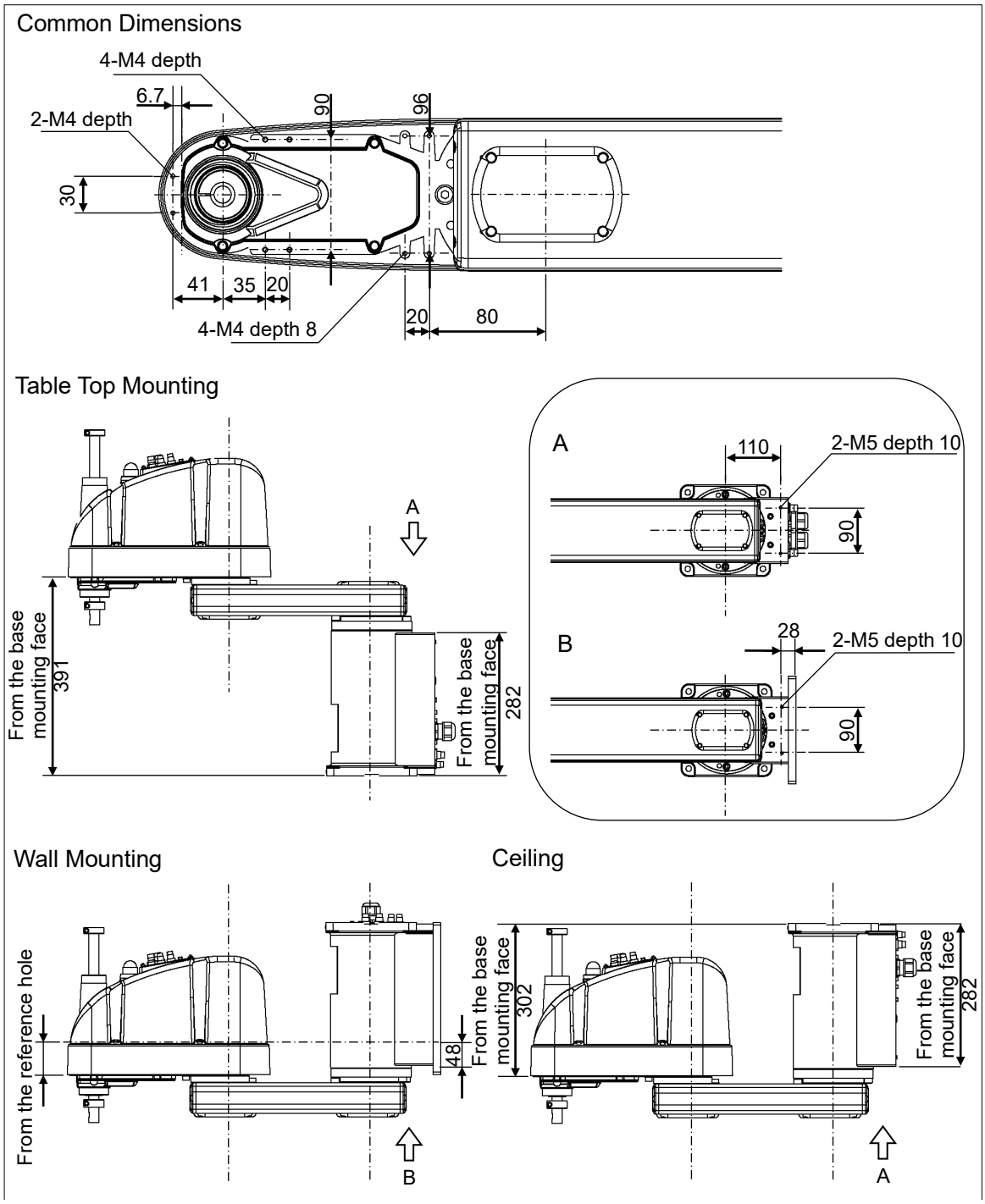

4.3 Weight and Inertia Settings

To ensure optimum Manipulator performance, it is important to make sure that the load (weight of the end effector and work piece) and moment of inertia of the load are within the maximum rating for the Manipulator, and that Joint #4 does not become eccentric.
If the load or moment of inertia exceeds the rating or if the load becomes eccentric, follow the steps below, "*4.3.1 Weight Setting*" and "*4.3.2 Inertia Setting*" to set parameters.
Setting parameters makes the PTP motion of the Manipulator optimal, reduces vibration to shorten the operating time, and improves the capacity for larger loads. In addition, it reduces persistent vibration produced when the moment of inertia of the end effector and work piece is larger than the default setting.

4.3.1 Weight Setting

CAUTION	■ The total weight of the end effector and the work piece must not exceed 6 kg. The G6 series Manipulators are not designed to work with loads exceeding 6 kg. Always set the Weight parameters according to the load. Setting a value that is smaller than the actual load may cause errors, excessive shock, insufficient function of the Manipulator, and/or shorten the life cycle of parts/mechanisms.

The acceptable weight capacity (end effector and work piece) in G6 series is 3 kg at the default rating and 6 kg at the maximum. When the load (weight of the end effector and work piece) exceeds the rating, change the setting of Weight parameter.
After the setting is changed, the maximum acceleration/deceleration speed of the robot system at PTP motion corresponding to the "Weight Parameter" is set automatically.

Load on the Shaft

The load (weight of the end effector and work piece) on the shaft can be set by Weight parameter.

EPSON RC+

Enter a value into the [Load inertia:] text box on the [Inertia] panel ([Tools] - [Robot Manager]). (You may also execute the Inertia command from the [Command Window].)

Load on the Arm

When you attach a camera or other devices to the arm, calculate the weight as the equivalent of the shaft. Then, add this to the load and enter the total weight to the Weight parameter.

Equivalent Weight Formula

When you attach the equipment near Arm #2: $W_M = M (L_1)^2/(L_1+L_2)^2$
When you attach the equipment to the end of Arm #2: $W_M = M (L_M)^2/(L_2)^2$

W_M : equivalent weight
M : weight of camera etc.
L_1 : length of Arm #1
L_2 : length of Arm #2
L_M : distance from rotation center of Joint #2 to center of gravity of camera etc.

<Example> A “1 kg” camera is attached to the end of the G6 series arm (350 mm away from the rotation center of Joint #2) with a load weight of “2 kg”.

$M=1$

$L_2=250$

$L_M=350$

$W_M=1\times350^2/250^2=1.96 \rightarrow 2$ (round up)

$W+W_M=2+2=4$

Enter “4” for the Weight Parameter.

Automatic speed setting by Weight

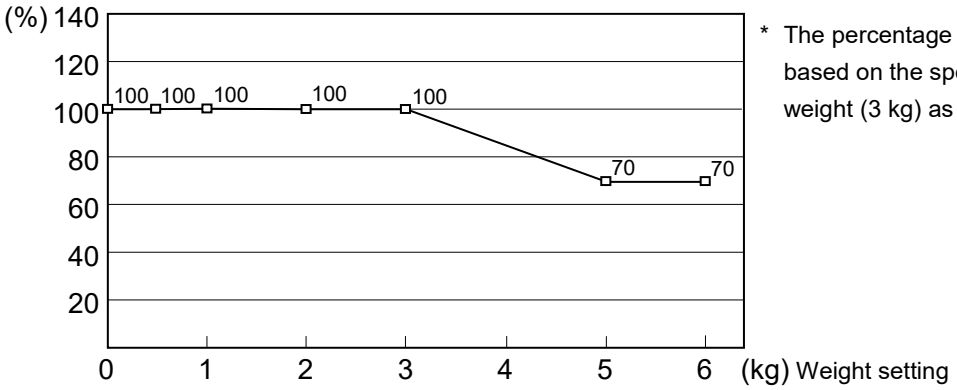

* The percentage in the graph is based on the speed at rated weight (3 kg) as 100%.

Automatic acceleration/deceleration setting by Weight

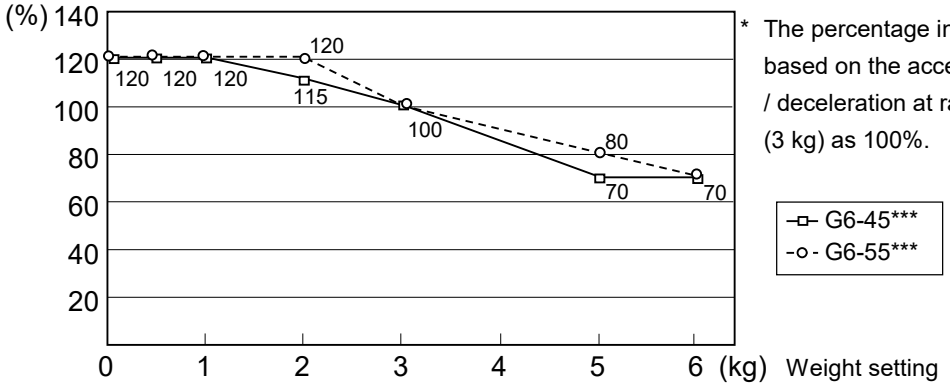

* The percentage in the graph is based on the acceleration / deceleration at rated weight (3 kg) as 100%.

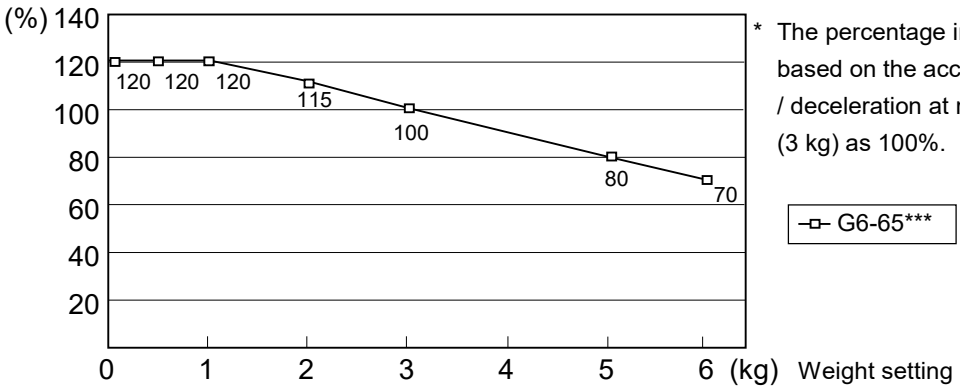

* The percentage in the graph is based on the acceleration / deceleration at rated weight (3 kg) as 100%.

4.3.2 Inertia Setting

Moment of Inertia and the Inertia Setting

The moment of inertia is defined as “the ratio of the torque applied to a rigid body and its resistance to motion”. This value is typically referred to as “the moment of inertia”, “inertia”, or “GD^2”. When the Manipulator operates with additional objects (such as an end effector) attached to the shaft, the moment of inertia of load must be considered.

CAUTION	■ The moment of inertia of the load (weight of the end effector and work piece) must be 0.12 kg·m^2 or less. The G6 series Manipulators are not designed to work with a moment of inertia exceeding 0.12 kg·m^2. Always set the moment of inertia parameter to the correct moment of inertia. Setting a value that is smaller than the actual moment of inertia may cause errors, excessive shock, insufficient function of the Manipulator, and/or shorten the life cycle of parts/mechanisms.

The acceptable moment of inertia of load for a G6 series Manipulator is 0.01 kg·m^2 at the default rating and 0.12 kg·m^2 at the maximum. When the moment of inertia of the load exceeds the rating, change the setting of the moment of inertia parameter of the Inertia command. After the setting is changed, the maximum acceleration/deceleration speed of Joint #4 at PTP motion corresponding to the “moment of inertia” value is set automatically.

Moment of inertia of load on the shaft

The moment of inertia of load (weight of the end effector and work piece) on the shaft can be set by the “moment of inertia” parameter of the Inertia command.

EPSON RC+

Enter a value into the [Weight:] text box on the [Weight] panel ([Tools]-[Robot Manager]). (You may also execute the Weight command from the [Command Window].)

Automatic acceleration/deceleration setting of Joint #4 by Inertia (moment of inertia)

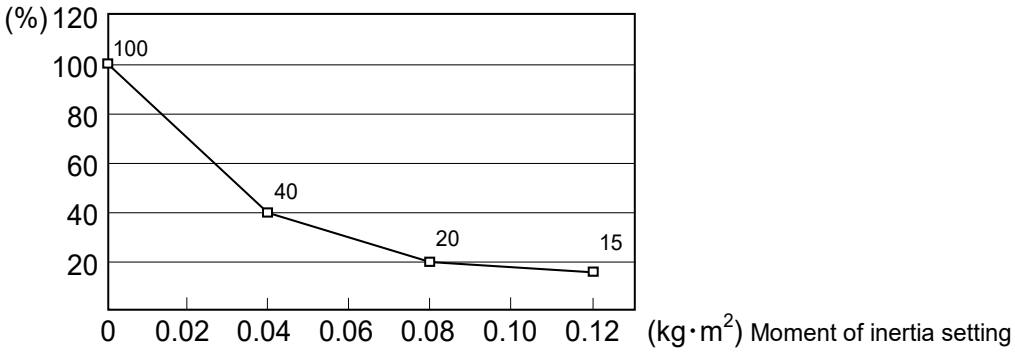

Eccentric Quantity and the Inertia Setting

CAUTION	■ The eccentric quantity of load (weight of the end effector and work piece) must be 150 mm or less. The G6 series Manipulators are not designed to work with eccentric quantity exceeding 150 mm. Always set the eccentric quantity parameter according to the eccentric quantity. Setting a value that is smaller than the actual eccentric quantity may cause errors, excessive shock, insufficient function of the Manipulator, and/or shorten the life cycle of parts/mechanisms.

The acceptable eccentric quantity of load in G6 series is 0 mm at the default rating and 150 mm at the maximum. When the eccentric quantity of load exceeds the rating, change the setting of eccentric quantity parameter of Inertia command. After the setting is changed, the maximum acceleration/deceleration speed of the Manipulator at PTP motion corresponding to the "eccentric quantity" is set automatically.

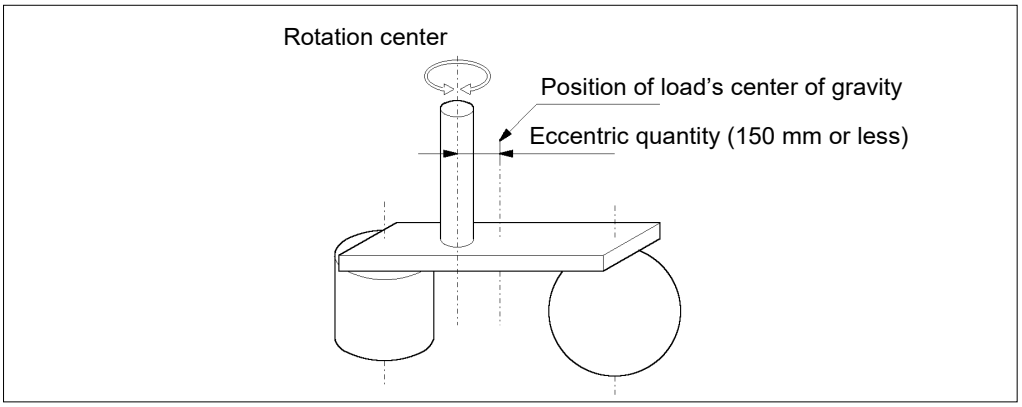

Eccentric Quantity

Eccentric quantity of load on the shaft

The eccentric quantity of load (weight of the end effector and work piece) on the shaft can be set by "eccentric quantity" parameter of Inertia command.

EPSON RC+

Enter a value into the [Eccentricity:] text box on the [Inertia] panel ([Tools]-[Robot Manager]). (You may also execute the Inertia command from the [Command Window].)

Automatic acceleration/deceleration setting by Inertia (eccentric quantity)

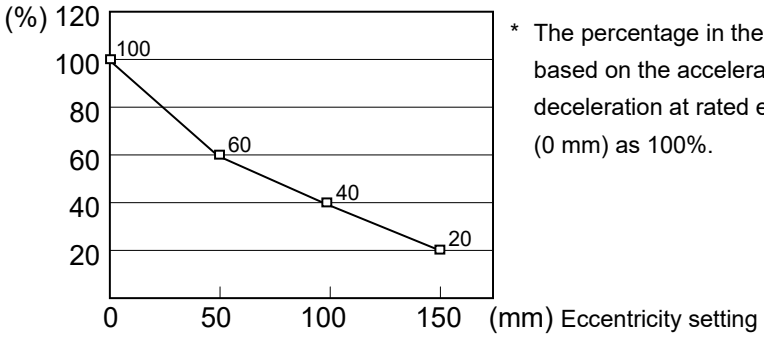

* The percentage in the graph is based on the acceleration / deceleration at rated eccentricity (0 mm) as 100%.

Calculating the Moment of Inertia

Refer to the following examples of formulas to calculate the moment of inertia of load (end effector with work piece).

The moment of inertia of the entire load is calculated by the sum of each part (a), (b), and (c).

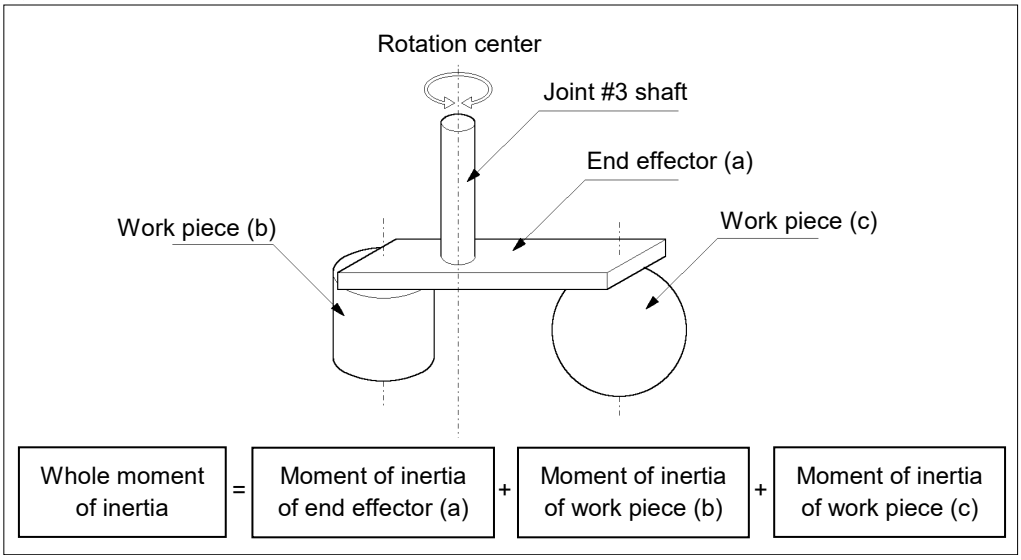

The methods for calculating the moment of inertia for (a), (b), and (c) are shown below. Calculate the total moment of inertia using the basic formulas.

(a) Moment of inertia of a rectangular parallelepiped

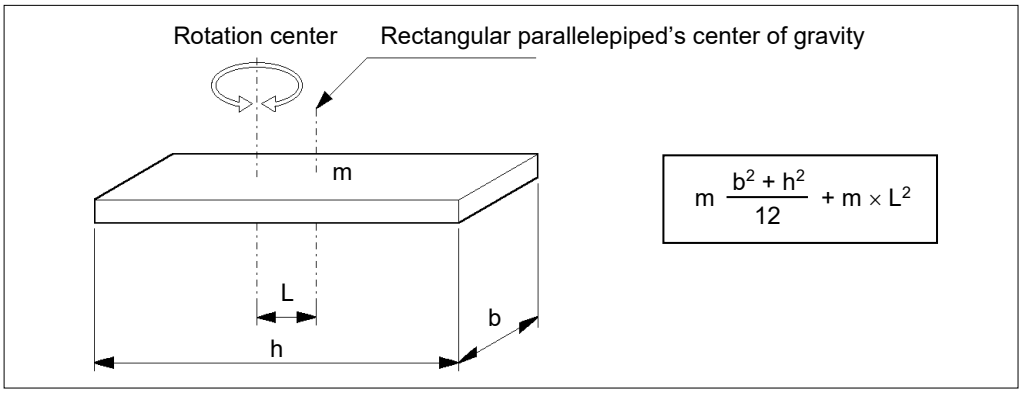

(b) Moment of inertia of a cylinder

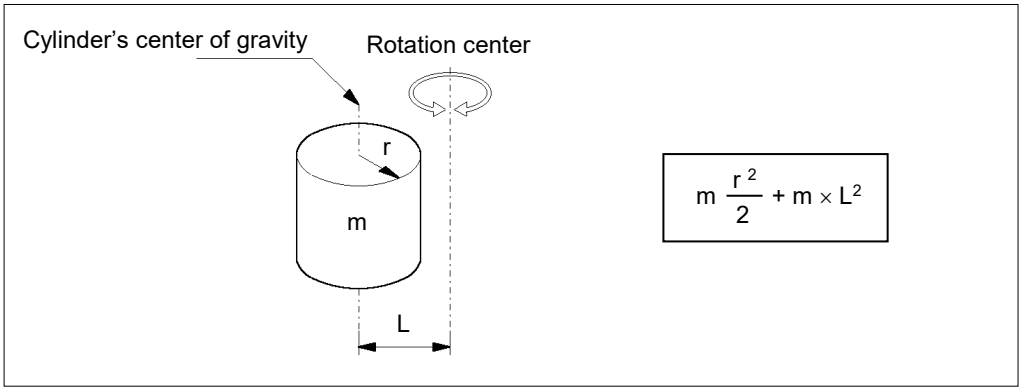

(c) Moment of inertia of a sphere

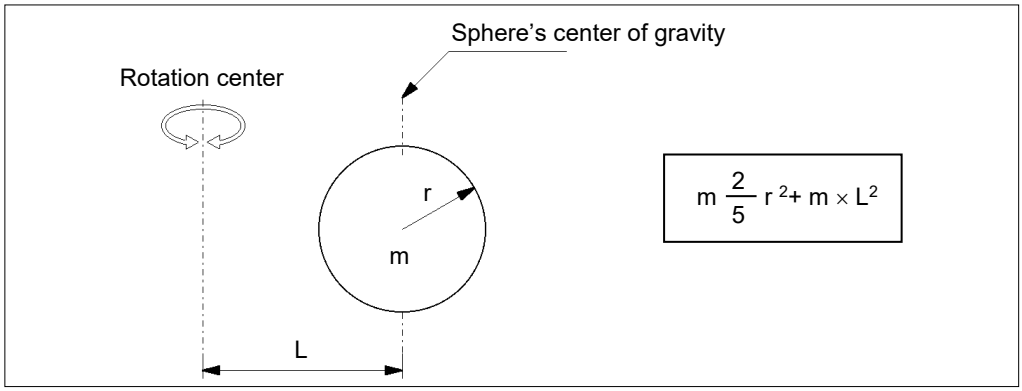

4.4 Precautions for Auto Acceleration/Deceleration of Joint #3

When you move the Manipulator in horizontal PTP motion with Joint #3 (Z) at a high position, the motion time will be faster.

When Joint #3 gets below a certain point, then auto acceleration/deceleration is used to reduce acceleration/deceleration. (Refer to the figure below.) The higher the position of the shaft is, the faster the motion acceleration/deceleration is. However, it takes more time to move Joint #3 up and down. Adjust the position of Joint #3 for the Manipulator motion after considering the relation between the current position and the destination position.

The upper limit of Joint #3 during horizontal motion using Jump command can be set by the LimZ command.

Automatic acceleration/deceleration vs. Joint #3 position

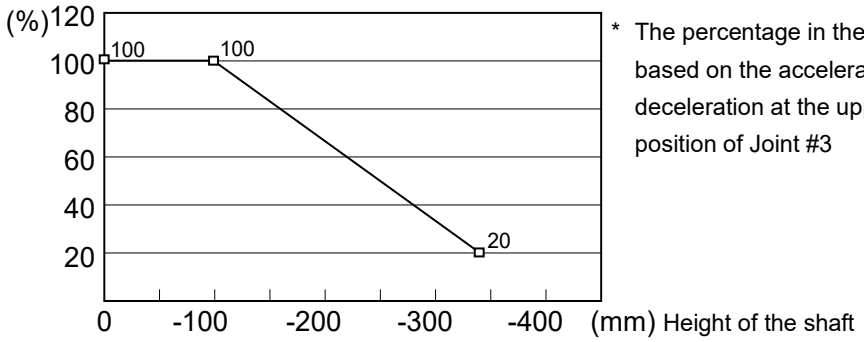

* The percentage in the graph is based on the acceleration / deceleration at the upper-limited position of Joint #3

NOTE ☞ When moving the Manipulator horizontally while the shaft is being lowered, it may cause over-shoot at the time of final positioning.

5. Motion Range

CAUTION	■ When setting up the motion range for safety, both the pulse range and mechanical stops must always be set at the same time.

The motion range is preset at the factory as explained in *5.4 Standard Motion Range*. That is the maximum motion range of the Manipulator.

There are three methods for setting the motion range described as follows:

1. Setting by pulse range (for all joints)
2. Setting by mechanical stops (for Joints #1 to #3)
3. Setting the Cartesian (rectangular) range in the X, Y coordinate system of the Manipulator (for Joints #1 and #2)

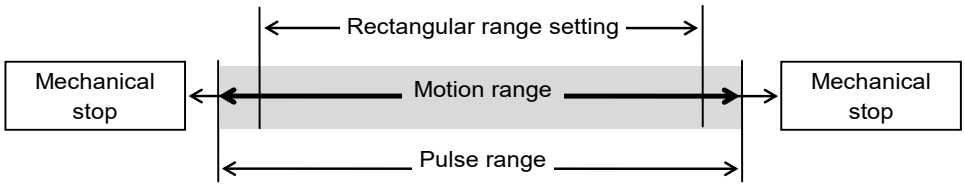

When the motion range is changed due to layout efficiency or safety, follow the descriptions in *5.1* to *5.3* to set the range.

5.1 Motion Range Setting by Pulse Range (for All Joints)

Pulses are the basic unit of Manipulator motion. The motion range of the Manipulator is controlled by the pulse range between the pulse lower limit and upper limit of each joint. Pulse values are read from the encoder output of the servo motor.

For the maximum pulse range, refer to the following sections.
The pulse range must be set inside of the mechanical stop range.

5.1.1 Max. Pulse Range of Joint #1
5.1.2 Max. Pulse Range of Joint #2
5.1.3 Max. Pulse Range of Joint #3
5.1.4 Max. Pulse Range of Joint #4.

NOTE

Once the Manipulator receives an operating command, it checks whether the target position specified by the command is within the pulse range before operating. If the target position is out of the set pulse range, an error occurs and the Manipulator does not move.

EPSON RC+

The pulse range can be set on the [Range] panel shown by selecting [Tools]-[Robot Manager]. (You may also execute the Range command from the [Command Window].)

5.1.1 Max. Pulse Range of Joint #1

The 0 (zero) pulse position of Joint #1 is the position where Arm #1 faces toward the positive (+) direction on the X-coordinate axis.
When the 0 pulse is a starting point, the counterclockwise pulse value is defined as the positive (+) and the clockwise pulse value is defined as the negative (−).

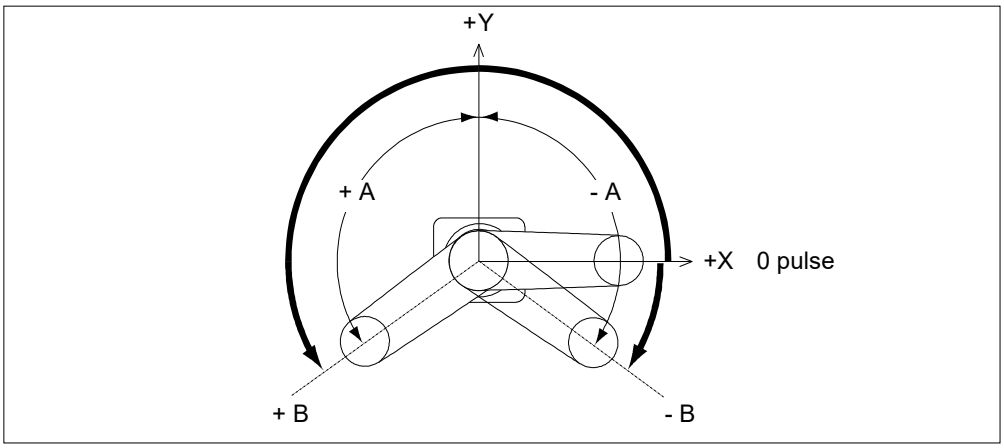

	Arm length	Table Top Mounting	Ceiling Mounting	Wall mounting
A Max. Motion Range	45	±152 degrees	±120 degrees	±105 degrees
	55			±135 degrees
	65			±148 degrees
B Max. Pulse Range	45	−1805881 to +7048761	−873814 to +6116694	−436907 to +5679787
	55			−1310720 to +6553600
	65			−1689373 to +6932253

5.1.2 Max. Pulse Range of Joint #2

The 0 (zero) pulse position of Joint #2 is the position where Arm #2 is in-line with Arm #1. With the 0 pulse as a starting point, the counterclockwise pulse value is defined as the positive (+) and the clockwise pulse value is defined as the negative (−).

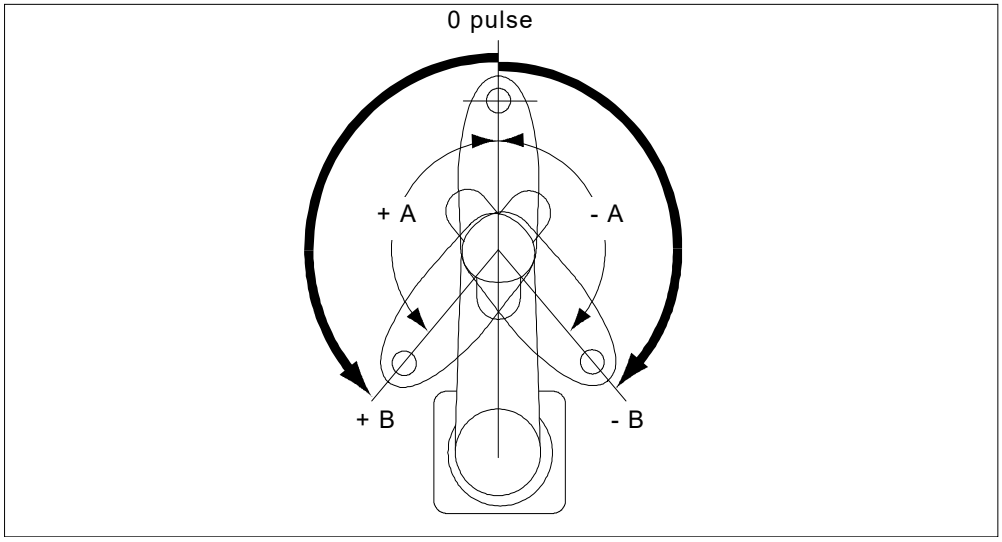

	Model		Table Top Mounting	Ceiling, Wall Mountings
A Max. Motion Range	G6-45*S*, D*	Z : 0 to –270 mm	±147.5 degrees	±130 degrees
		Z : –270 to –330 mm	±145 degrees	
	G6-45*C*, P*, D* bellows	Z : 0 to –240 mm	±147.5 degrees	
		Z : –240 to –300 mm	±142 degrees	
	G6-55*C*, P*, D* bellows		±147.5 degrees	±145 degrees
	G6-55*S*, D*		±147.5 degrees	
	G6-65***			
B Max. Pulse Range	G6-45*S*, D*	Z : 0 to –270 mm	±2685156	±2366578
		Z : –270 to –330 mm	±2369645	
	G6-45*C*, P*, D* bellows	Z : 0 to –240 mm	±2685156	
		Z : –240 to –300 mm	±2585031	
	G6-55*C*, P*, D* bellows		±2685156	±2639645
	G6-55*S*, D*		±2685156	
	G6-65***			

The bellows for G6-***D are options at shipment.

NOTE ☞ In the range Z: -270 to -330 mm (G6-45*S*, D*), and Z: -240 to -300 mm (G6-45*C*, P*, D* bellows), the area is limited by interference of the Manipulator body and the arm.

5.1.3 Max. Pulse Range of Joint #3

The 0 (zero) pulse position of Joint #3 is the position where the shaft is at its upper limit. The pulse value is always negative because Joint #3 always moves lower than the 0 pulse position.

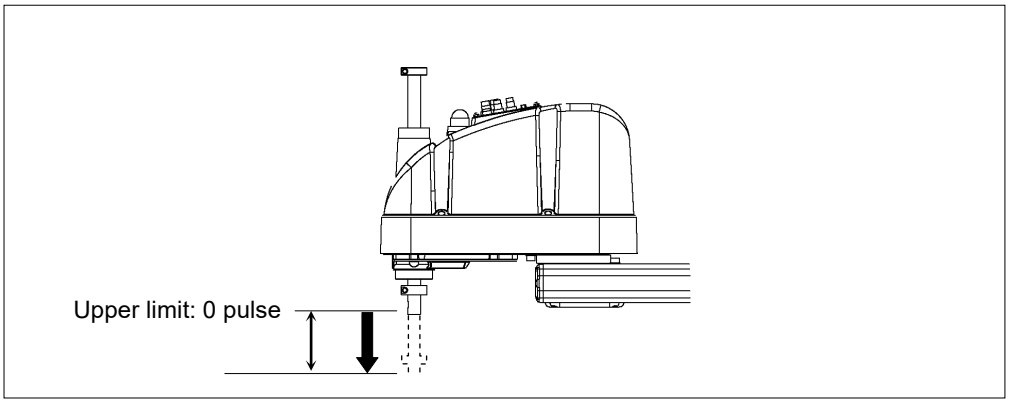

Model	Joint #3 Stroke	Minimum Limit Pulse
G6-**1S*, D*	180 mm	−1976708
G6-**3S*, D*	330 mm	−1811982
G6-**1C*, P*, D* bellows	150 mm	−1647257
G6-**3C*, P*, D* bellows	300 mm	−1647257

The bellows for G6-***D* are options at shipment.

NOTE

For the Cleanroom-model (G6-***C*) and Protected-model (G6-*** P*/D* with bellows option), the motion range set with the Joint #3 mechanical stop cannot be changed.

5.1.4 Max. Pulse Range of Joint #4

The 0 (zero) pulse position of Joint #4 is the position where the flat near the end of the shaft faces toward the end of Arm #2. With the 0 pulse as a starting point, the counterclockwise pulse value is defined as the positive (+) and the clockwise pulse value is defined as the negative (−).

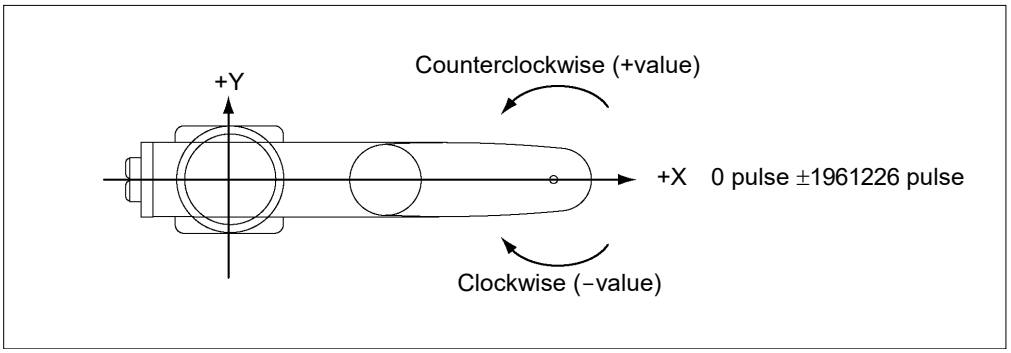

5.2 Motion Range Setting by Mechanical Stops

Mechanical stops physically limit the absolute area that the Manipulator can move.

Both Joints #1 and #2 have threaded holes in the positions corresponding to the angle for the mechanical stop settings. Install the bolts in the holes corresponding to the angle that you want to set.

Joints #3 can be set to any length less than the maximum stroke.

Table Top Mounting

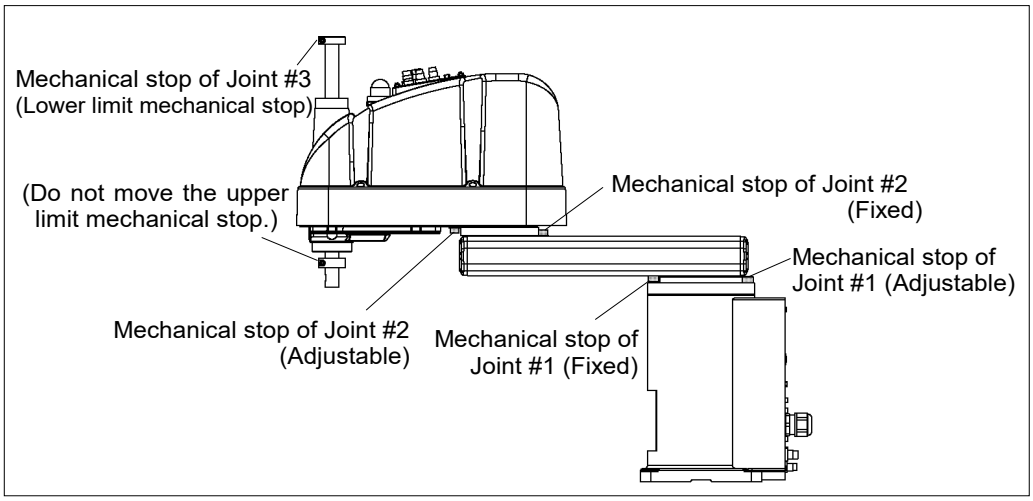

Wall Mounting

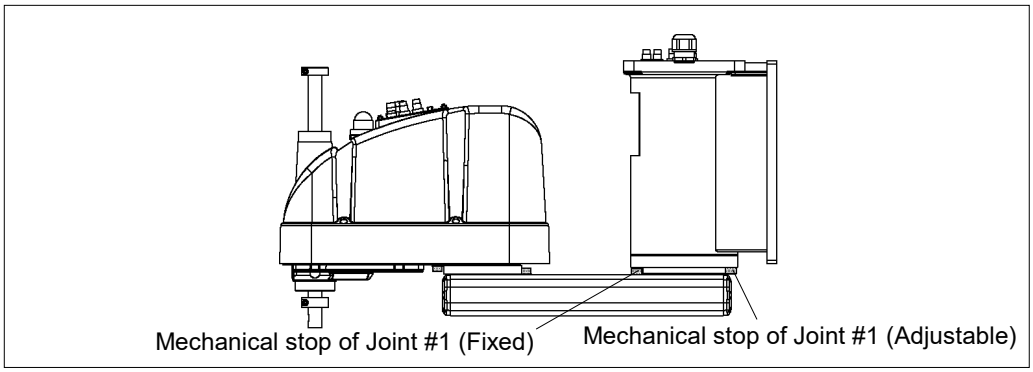

Ceiling Mounting

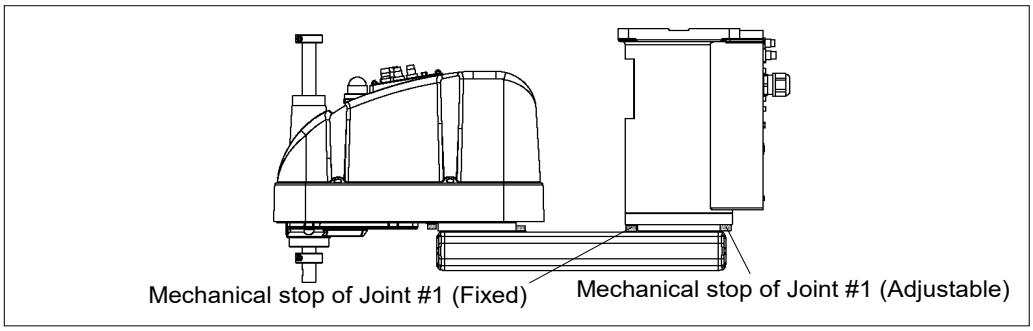

* The different mechanical stop positions from Table Top mounting are indicated for Wall mounting and Ceiling mounting.

5.2.1 Setting the Mechanical Stops of Joints #1 and #2

Both Joints #1 and #2 have threaded holes in the positions corresponding to the angle for the mechanical stop settings. Install the bolts in the holes corresponding to the angle that you want to set.

Joint #1 Mechanical Stops

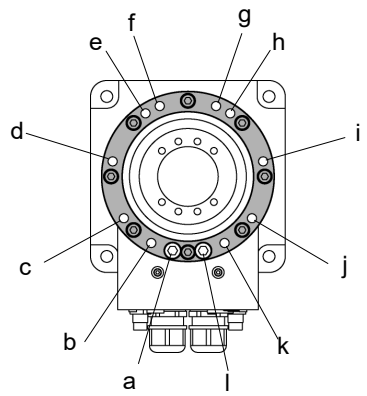

Joint #1

Mounting	Arm Length	a	b	c	d	e	f	g	h	i	j	k	l
Table Top	45, 55, 65	+152°	+135°	+105°	+60°	+20°	+5°	−5°	−20°	−60°	−105°	−135°	−152°
Ceiling	55, 65												
Wall	65		+148°									−148°	
	55		+135°									−135°	
Ceiling	45		+120°		+75°	+30°			−30°	−75°		−120°	
Wall	45												

Setting Angle	+152°	+148°	+135°	+120°	+105°	+75°	+60°
Pulse Value	7048761	6932253	6553600	6116694	5679787	4805974	4369067

Setting Angle	+30°	+20°	+5°	−5°	−20°	−30°	−60°
Pulse Value	3495254	3203983	2767076	2475805	2038898	1747627	873814

Setting Angle	−75°	−105°	−120°	−135°	−148°	−152°
Pulse Value	436907	−436907	−873814	−1310720	−1689373	−1805881

(°: degree)

Joint #2 Mechanical Stops

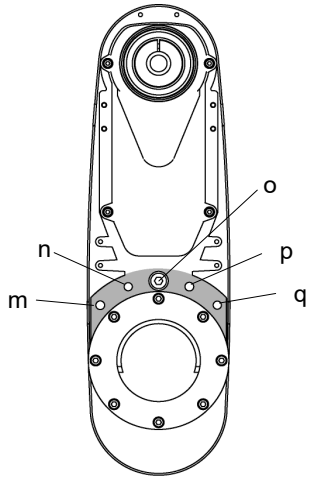

Joint #2

Model		Arm Length	m	n	o	p	q
Table Top, Ceiling, Wall		55, 65	+100°	+125°	+147.5°	−125°	−100°
Table Top	G6-45*S, D	45 (Z : 0 to –270)					
		45 (Z :–270 to –330)			+145°		
	G6-45*C, P, D bellows	45 (Z : 0 to –240)			+147.5°		
		45 (Z :–240 to –300)			+142°		
Ceiling, Wall		45			+130°		

The bellows for G6-***D* are options at shipment.

Setting Angle	+147.5°	+145°	+142°	+130°	+125°	+100°
Pulse Value	2685156	2639645	2585031	2366578	2275556	1820445

Setting Angle	−100°	−125°	−130°	−142°	−145°	−147.5°
Pulse Value	−1820445	−2275556	−2366578	−2585031	−2639644	−2685156

(°: degree)

(1) Turn OFF the Controller.

(2) Install a hexagon socket head cap bolt into the hole corresponding to the setting angle, and tighten it.

Joint	Hexagon socket head cap bolt (fully threaded)	The number of bolts	Recommended tightening torque	Strength
1	M10 × 20	1 bolt / one side	127.4 N·m (1300 kgf·cm)	ISO898-1 property class: 10.9 or 12.9.
2	M8 × 10		37.2 N·m (380 kgf·cm)	

(3) Turn ON the Controller.

NOTE

(4) Set the pulse range corresponding to the new positions of the mechanical stops.
Be sure to set the pulse range inside the positions of the mechanical stop range.

Example: Using G6-**1S*
The angle of Joint #1 is set from −135 degrees to +135 degrees.
The angle of Joint #2 is set from −125 degrees to +125 degrees.

EPSON RC+

Execute the following commands from the [Command Window].

```
>JRANGE 1,-1310720,6553600   ' Sets the pulse range of Joint #1
>JRANGE 2,-2275556,+2275556 ' Sets the pulse range of Joint #2
>RANGE                       ' Checks the setting using Range
-1310720,6553600,-2275556,2275556,-1976708
    ,0,-1961226, 1961226
```

(5) Move the arm by hand until it touches the mechanical stops, and make sure that the arm does not hit any peripheral equipment during operation.

(6) Operate the joint changed at low speeds until it reaches the positions of the minimum and maximum pulse range. Make sure that the arm does not hit the mechanical stops. (Check the position of the mechanical stop and the motion range you set.)

Example: Using G6-**1S*
The angle of Joint #1 is set from −85 degrees to +115 degrees.
The angle of Joint #2 is set from −132 degrees to +132 degrees.

EPSON RC+

Execute the following commands from the [Command Window].

```
>MOTOR ON                    ' Turns ON the motor
>POWER LOW                   ' Enters low-power mode
>SPEED 5                     ' Sets at low speeds
>PULSE -1310720,0,0,0        ' Moves to the min. pulse position of Joint #1
>PULSE 6553600,0,0,0         ' Moves to the max. pulse position of Joint #1
>PULSE 2621440,-2275556,0,0 ' Moves to the min. pulse position of Joint #2
>PULSE 2621440,2275556,0,0  ' Moves to the max. pulse position of Joint #2
```

The Pulse command (Go Pulse command) moves all joints to the specified positions at the same time. Specify safe positions after considering motion of not only the joints whose pulse range have been changed, but also other joints.

In this example, Joint #1 is moved to the center of its motion range (pulse value: 2621440) when checking Joint #2.

If the arm is hitting the mechanical stops or if an error occurs after the arm hits the mechanical stops, either reset the pulse range to a narrower setting or extend the positions of the mechanical stops within the limit.

5.2.2 Setting the Mechanical Stop of Joint #3

NOTE

This method applies only to the Standard-model Manipulator (G6-***S*)/Protected-model Manipulator (G6-***D* without bellows option).
For the Cleanroom-model (G6-***C*) and Protected-model (G6-***D* with bellows option), the motion range set with the Joint #3 mechanical stop cannot be changed.

(1) Turn ON the Controller and turn OFF the motors using the Motor OFF command.

(2) Push up the shaft while pressing the brake release switch.

Do not push the shaft up to its upper limit or it will be difficult for the arm top cover to be removed. Push the shaft up to a position where the Joint #3 mechanical stop can be changed.

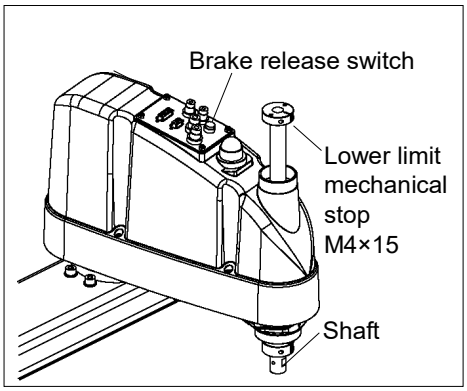

NOTE

When you press the brake release switch, the shaft may lower and rotate due to the weight of the end effector. Be sure to hold the shaft by hand while pressing the button.

(3) Turn OFF the Controller.

(4) Loosen the lower limit mechanical stop screw (M4×15).

NOTE

A mechanical stop is mounted on both the top and bottom of Joint #3. However, only the position of the lower limit mechanical stop on the top can be changed. Do not remove the upper limit mechanical stop on the bottom because the calibration point of Joint #3 is specified using the stop.

(5) The upper end of the shaft defines the maximum stroke. Move the lower limit mechanical stop down by the length you want to limit the stroke.
For example, when the lower limit mechanical stop is set at “150 mm” stroke, the lower limit Z coordinate value is “−150”. To change the value to “−100”, move the lower limit mechanical stop down “50 mm”. Use calipers to measure the distance when adjusting the mechanical stop.

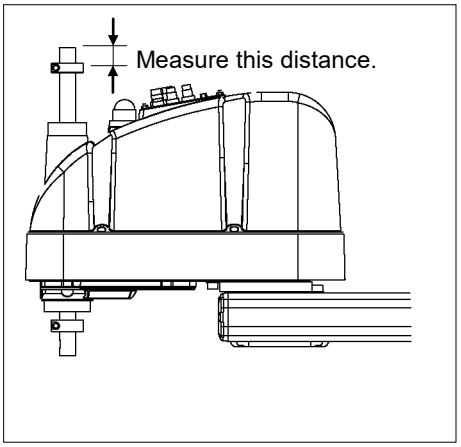

(6) Firmly tighten two lower limit mechanical stop screws (M4 × 15) so that they do not enter the shaft groove.
Recommended tightening torque: 4.9 N·m (50 kgf·cm)

(7) Turn ON the Controller.

(8) Move Joint #3 to its lower limit while pressing the brake release switch, and then check the lower limit position. Do not lower the mechanical stop too far. Otherwise, the joint may not reach a target position.

(9) Calculate the lower limit pulse value of the pulse range using the formula shown below and set the value.

The result of the calculation is always negative because the lower limit Z coordinate value is negative.

G6-**1S (Z: 150mm) Lower limit of pulse = lower limit Z coordinate value / 20 × 131072 × (62 / 37) G6-**4S (Z: 300mm) Lower limit of pulse = lower limit Z coordinate value / 40 × 131072 × (62 / 37)

Example: When lowering the mechanical stop by 50 mm and changing the lower limit Z coordinate value to "−100" in 150 mm stroke
(−100) / 20 × 131072 × (62 / 37) = − 1098171

EPSON RC+

Execute the following command from the [Command Window].

```
>JRANGE 3,-1098171,0        'Sets the pulse range of Joint #3
```

(10) Using the Pulse command (Go Pulse command), move Joint #3 to the lower limit position of the pulse range at low speed. If the mechanical stop range is less than the pulse range, Joint #3 will hit the mechanical stop and an error will occur. When the error occurs, either change the pulse range to a lower setting or extend the position of the mechanical stop within the limit.

NOTE

If it is difficult to check whether Joint #3 hits a mechanical stop, turn OFF the Controller and lift the arm top cover to check the condition causing the problem from the side.
For details on removing the top cover, refer to *3.1 Arm Top Cover*.

Example: When lowering the mechanical stop by 50 mm and changing the lower limit Z coordinate value to "−100" in 150 mm stroke

EPSON RC+

Execute the following commands from the [Command Window].

```
>MOTOR ON                 ' Turns ON the motor
>SPEED 5                  ' Sets low speed
>PULSE 0,0,-1098171,0     ' Moves to the lower limit-pulse position of Joint #3.
                            (In this example, all pulses except those for Joint
                            #3 are "0". Substitute these "0s" with the other
                            pulse values specifying a position where there is no
                            interference even when lowering Joint #3.)
```

5.3 Setting the Cartesian (Rectangular) Range in the XY Coordinate System of the Manipulator (for Joints #1 and #2)

Use this method to set the upper and lower limits of the X and Y coordinates.

This setting is only enforced by software. Therefore, it does not change the physical range. The maximum physical range is based on the position of the mechanical stops.

EPSON RC+

Set the XYLim setting on the [XYZ Limits] panel shown by selecting [Tools]-[Robot Manager].
(You may also execute the XYLim command from the [Command Window].)

5.4 Standard Motion Range

The following "motion range" diagrams show the standard (maximum) specification. When each Joint motor is under servo control, the center of Joint #3's (shaft's) lowest point moves in the areas shown in the figure.

"Area limited by mechanical stop" is the area where the center of Joint #3's lowest point can be moved when each joint motor is not under servo control.

"Mechanical stop" sets the limited motion range so that the center of Joint #3 cannot move beyond the area mechanically.

"Maximum space" is the area that contains the farthest reach of the arms. If the maximum radius of the end effector is over 60 mm, add the "Area limited by mechanical stop" and "radius of the end effector". The total value is specified as the maximum area.

Table Top Mounting

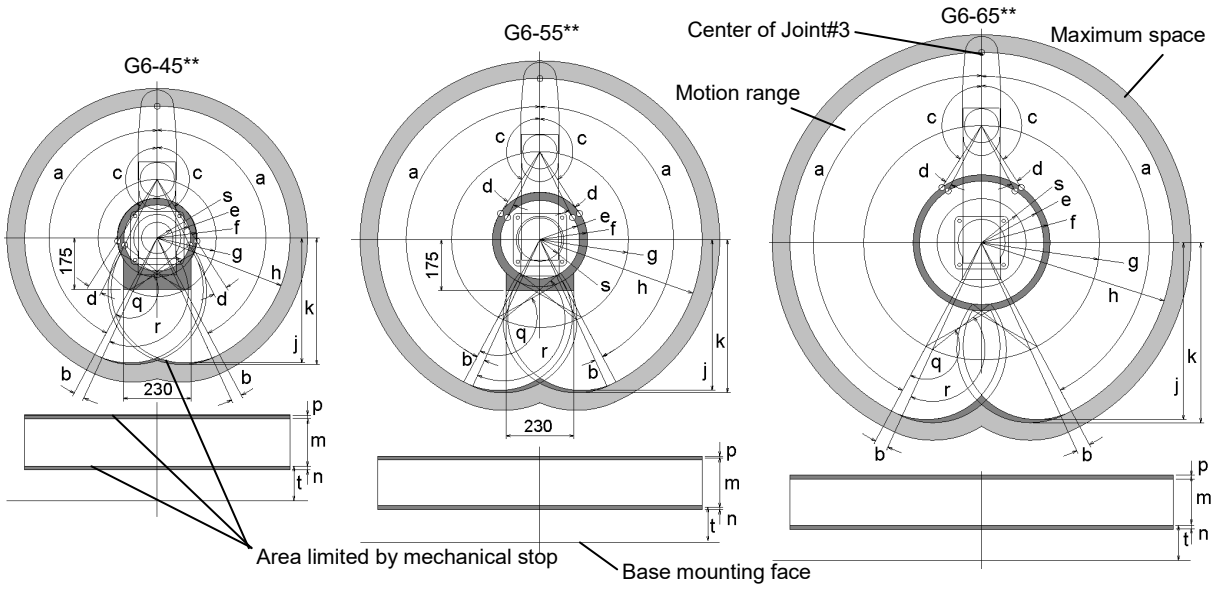

(°: degree)

		a	b	c	d	e	f	g	h	j	k
G6-45*S, D	Z 0 to –270	152°	3.5°	147.5°	3°	124.4	134.8	200	450	426.6	432
	Z –270 to –330			145°	5.5°		143.5				
G6-45*C, P, D bellows	Z 0 to –240			147.5°	3°		134.8				
	Z –240 to –300			142°	8.5°		153.9				
G6-55**				147.5°	6.3°	133.8	161.2	300	550	514.9	523
G6-65**						207.5	232	400	650	603.2	614

		q	r	s
G6-45*S, D	Z 0 to –270	147.5°	150.5°	64.4
	Z –270 to –330	145°		
G6-45*C, P, D bellows	Z 0 to –240	147.5°		
	Z –240 to –300	142°		
G6-55**		147.5°	153.8°	73.8
G6-65**				147.5

	m	n	p	t
G6-**1S, D	180	4.2	12.2	119
G6-**3S, D	330			–31
G6-**1C, P, D bellows	150	1.2	4.2	116
G6-**3C, P, D bellows	300			–34

The bellows for G6-***D* are options at shipment.

NOTE ☞ In the range Z: -270 to -330 mm (G6-45*S*, D*), and Z: -240 to -300 mm (G6-45*C*, P*, D* bellows), the area is limited by interference of the Manipulator body and the arm.

Wall Mounting

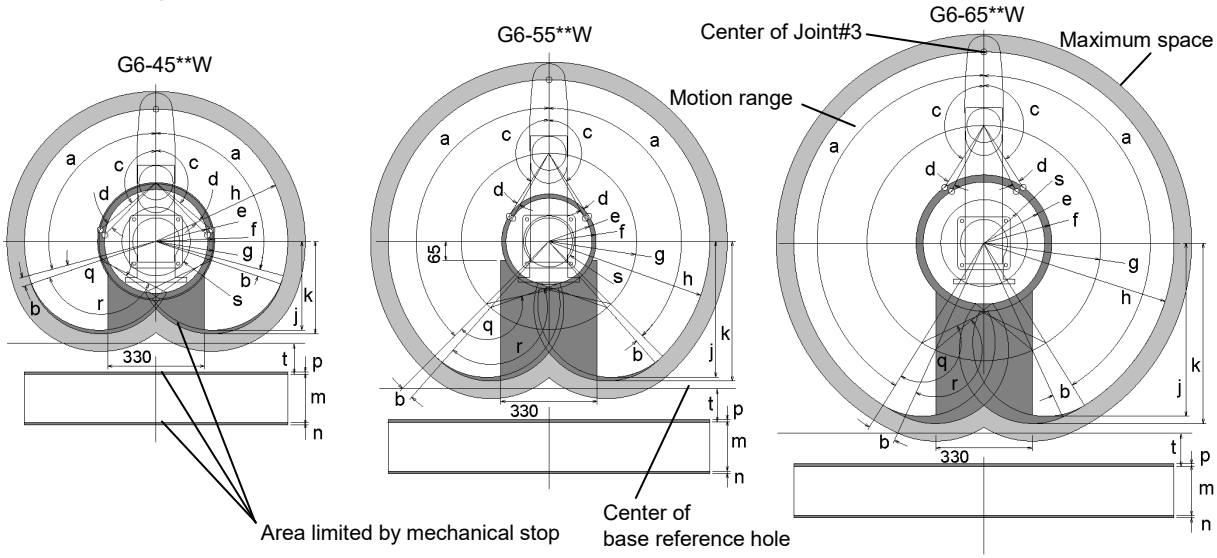

(°: degree)

	a	b	c	d	e	f	g	h
G6-45**W	105°	3.5°	130°	3.8°	182.4	195.5	200	450
G6-55*SW, DW	135°		147.5°	3.3°	146.8	161.2	300	550
G6-55*CW, PW, DW bellows			145°	5.8°		172.1		
G6-65**W	148°	7.5°	147.5°	6.3°	207.5	232	400	650

	j	k	q	r	s
G6-45**W	301.8	313.5	130°	133.8°	122.4
G6-55*SW, DW	462.1	474.7	147.5°	150.8°	86.8
G6-55*CW, PW, DW bellows			145°		
G6-65**W	589.2	614	147.5°	153.8°	147.5

	m	n	p	t
G6-**1SW, DW	180	4.2	12.2	160
G6-**3SW, DW bellows	330			
G6-**1CW, PW, DW	150	1.2	4.2	193
G6-**3CW, PW, DW bellows	300			

The bellows for G6-***DW are options at shipment.

Ceiling Mounting

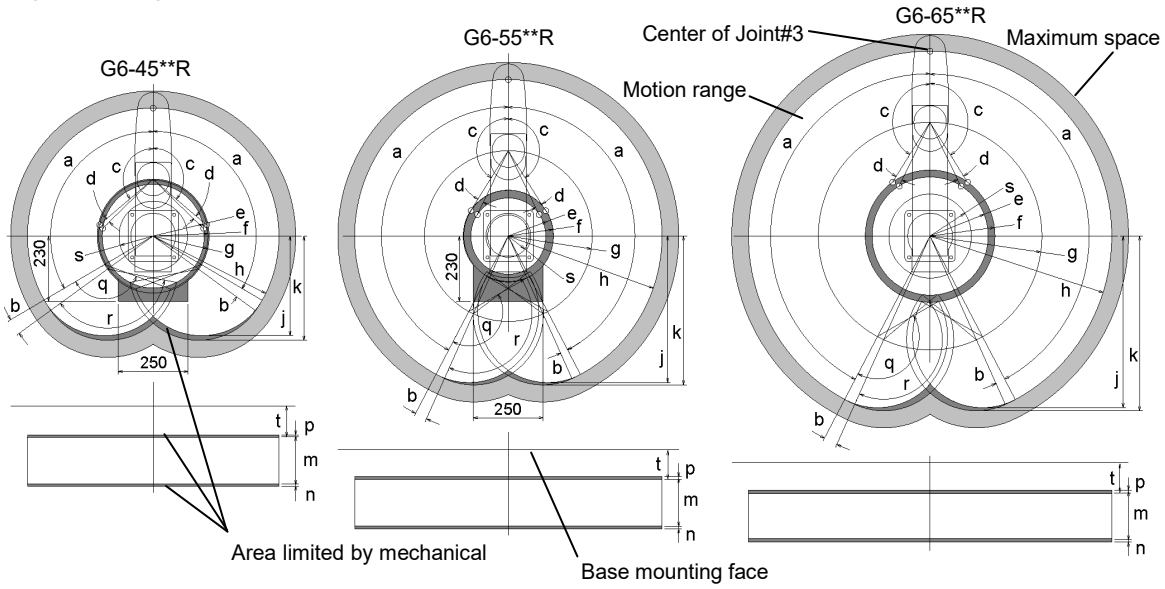

(°: degree)

	a	b	c	d	e	f	g	h	j	k
G6-45**R	120°	5.5°	130°	3.8°	182.4	195.5	200	450	350	366.1
G6-55*SR, DR	152°	3.5°	147.5°	3.3°	146.8	161.2	300	550	514.9	523
G6-55*CR, PR, DR bellows			145°	5.8°		172.1				
G6-65**R			147.5°	6.3°	207.5	232	400	650	603.2	614

	q	r	s
G6-45**R	130°	133.8°	122.4
G6-55*SR, DR	147.5°	150.8°	86.8
G6-55*CR, PR, DR bellows	145°		
G6-65**R	147.5°	153.8°	147.5

	m	n	p	t
G6-**1SR, DR	180	4.2	12.2	–9
G6-**3SR, DR bellows	330			141
G6-**1CR	150	1.2	4.2	99
G6-**3CR	300			249
G6-**1PR, DR	150			102.5
G6-**3PR, DR bellows	300			252.5

The bellows for G6-***DR are options at shipment.

G10 20 Manipulator

This volume contains information for setup and operation of the Manipulators.
Please read this volume thoroughly before setting up and operating the Manipulators.

1. Safety

Unpacking and transportation of the Manipulators and robotic equipment shall be performed by personnel who has taken robot system training held by us and suppliers and should conform to all national and local codes. Please read this manual and other related manuals before installing the robot system or before connecting cables.
Keep this manual handy for easy access at all times.

1.1 Conventions

Important safety considerations are indicated throughout the manual by the following symbols. Be sure to read the descriptions shown with each symbol.

WARNING	This symbol indicates that a danger of possible serious injury or death exists if the associated instructions are not followed properly.
WARNING	This symbol indicates that a danger of possible serious injury caused by electric shock exists if the associated instructions are not followed properly.
CAUTION	This symbol indicates that a danger of possible harm to people or physical damage to equipment and facilities exists if the associated instructions are not followed properly.

1.2 Design and Installation Safety

This product is intended for transporting and assembling parts in a safely isolated area.
Design and installation of robot system shall be performed by personnel who has taken robot system training held by us and suppliers.
To ensure safety, a safeguard must be installed for the robot system. For details on the safeguard, refer to the *Installation and Design Precautions* in the *Safety* chapter of the *EPSON RC+ User's Guide*.

The following items are safety precautions for design personnel:

WARNING	■ Personnel who design and/or construct the robot system with this product must read *Safety Manual t*o understand the safety requirements before designing and/or constructing the robot system. Designing and/or constructing the robot system without understanding the safety requirements is extremely hazardous, may result in serious bodily injury and/or severe equipment damage to the robot system, and may cause serious safety problems. ■ The Manipulator and the Controller must be used within the environmental conditions described in their respective manuals. This product has been designed and manufactured strictly for use in a normal indoor environment. Using the product in an environment that exceeds the specified environmental conditions may not only shorten the life cycle of the product but may also cause serious safety problems. ■ The robot system must be used within the installation requirements described in the manuals. Using the robot system outside of the installation requirements may not only shorten the life cycle of the product but also cause serious safety problems. ■ When designing or installing a robot system, wear at least the following protective gear. Working without protective gear may cause serious safety problems. Work clothes suitable for work Helmet Safety shoes

Further precautions for installation are mentioned in the chapter *3. Environments and Installation.* Please read this chapter carefully to understand safe installation procedures before installing the robots and robotic equipment.

1.2.1 Strength of the Ball Screw Spline

If a load exceeding the allowable value is applied to the ball screw spline, it may not work properly due to deformation or breakage of the shaft. If the ball screw spline is applied the load exceeding the allowable value, it is necessary to replace the ball screw spline unit.
The allowable loads differ depending on distance where the load is applied to. For calculating the allowable load, see the calculation formula below.

[Allowable bending moment]

G10/G20: $M=50{,}000\ N{\cdot}mm$

Example: If 500 N load is applied
at 100 mm from
the end of the spline nut

[Moment]

$M=F{\cdot}L=100{\cdot}500=50{,}000\ N{\cdot}mm$

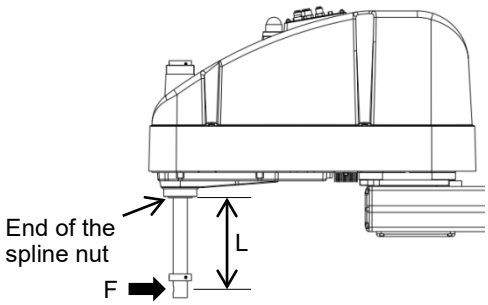

1.3 Operation Safety

The following items are safety precautions for qualified Operator personnel:

WARNING	■ Please carefully read *Safety Manual* before operating the robot system. Operating the robot system without understanding the safety precautions is extremely hazardous and may result in serious bodily injury and/or severe equipment damage to the robot system. ■ Do not enter the operating area of the Manipulator while the power to the robot system is turned ON. Entering the operating area with the power ON is extremely hazardous and may cause serious safety problems as the Manipulator may move even if it seems to be stopped. ■ Before operating the robot system, make sure that no one is inside the safeguarded area. The robot system can be operated in the mode for teaching even when someone is inside the safeguarded area. The motion of the Manipulator is always in restricted (low speeds and low power) status to secure the safety of an operator. However, operating the robot system while someone is inside the safeguarded area is extremely hazardous and may result in serious safety problems in case that the Manipulator moves unexpectedly. ■ Immediately press the Emergency Stop switch whenever the Manipulator moves abnormally while the robot system is operated.

WARNING	■ To shut off power to the robot system, disconnect the power plug from the power source. Be sure to connect the AC power cable to a power receptacle. DO NOT connect it directly to a factory power source. ■ Before performing any replacement procedure, turn OFF the Controller and related equipment, and then disconnect the power plug from the power source. Performing any replacement procedure with the power ON is extremely hazardous and may result in electric shock and/or malfunction of the robot system. ■ Do not connect or disconnect the motor connectors while the power to the robot system is turned ON. Connecting or disconnecting the motor connectors with the power ON is extremely hazardous and may result in serious bodily injury as the Manipulator may move abnormally, and also may result in electric shock and/or malfunction of the robot system.

CAUTION	■ Whenever possible, only one person should operate the robot system. If it is necessary to operate the robot system with more than one person, ensure that all people involved communicate with each other as to what they are doing and take all necessary safety precautions. ■ Joint #1, #2, and #4: If the joints are operated repeatedly with the operating angle less than 5 degrees, they may get damaged early because the bearings are likely to cause oil film shortage in such situation. To prevent early breakdown, move each joint larger than 50 degrees for about once an hour. Joint #3: If the up-and-down motion of the hand is less than 10 mm, move the joint a half of the maximum stroke for about once an hour. ■ Vibration (resonance) may occur continuously in low speed Manipulator motion (Speed: approx. 5 to 20%) depending on combination of Arm orientation and end effector load. Vibration arises from natural vibration frequency of the Arm and can be controlled by following measures. Changing Manipulator speed Changing the teach points Changing the end effector load

1.4 Emergency Stop

If the Manipulator moves abnormally during operation, immediately press the Emergency Stop switch. Pressing the Emergency Stop switch immediately changes the manipulator to deceleration motion and stops it at the maximum deceleration speed.
Avoid pressing the Emergency Stop switch unnecessarily while the Manipulator is running normally.

- The Manipulator may hit the peripheral equipment.
  When you press the Emergency Stop switch, the operating trajectory until the robot system stops is different from that in normal operation.
- The life of the brakes will be shortened.
  The brakes are locked and the brake friction plate is worn.
  Normal brake life cycle: About 2 years (when the brakes are used 100 times/day)
  However, the rough normal relay life is approximately 20,000 times. If you press the emergency stop switch unnecessarily, the life of the relay will be shortened.
- Impact is applied on the reduction gear unit, and it may result in the short life of the reduction gear unit.

To place the system in emergency mode during normal operation, press the Emergency Stop switch when the Manipulator is not moving.
Refer to the Controller manual for instructions on how to wire the Emergency Stop switch circuit.

Do not turn OFF the Controller while the Manipulator is operating.
If you attempt to stop the Manipulator in emergency situations, make sure to stop the Manipulator using the E-STOP of the Controller.

If the Manipulator is stopped by turning OFF the Controller while it is operating, following problems may occur.

Reduction of the life and damage of the reduction gear unit
Position gap at the joints

In addition, if the Controller was forced to be turned OFF by blackouts and the like while the Manipulator is operating, make sure to check the following points after power restoration.

Whether or not the reduction gear is damaged
Whether or not the joints are in their proper positions

If there is a position gap, perform calibration by referring to the *G series Maintenance Manual – G10 20 Manipulator - 14. Calibration* in the manual.

Before using the Emergency Stop switch, be aware of the followings.

- The Emergency Stop (E-STOP) switch should be used to stop the Manipulator only in case of emergencies.
- To stop the Manipulator operating the program except in emergency, use Pause (halt) or STOP (program stop) commands.
  Pause and STOP commands do not turn OFF the motors. Therefore, the brake does not function.
- For the Safeguard system, do not use the circuit for E-STOP.

For details of the Safeguard system, refer to the *Inspection Point.*

NOTE
Test pulse cannot be used with the emergency stop input of this model.

Stopping distance in emergency

The operating Manipulator cannot stop immediately after the Emergency Stop switch is pressed. In addition, stopping time and stopping distance vary by following factors:

Hand weight	WEIGHT Setting	ACCEL Setting
Workpiece weight	SPEED Setting	Posture etc.

For stopping time and stopping distance of the Manipulator, refer to "*Appendix B: Stopping Time and Stopping Distance in Emergency*".

1.5 Safeguard

To ensure safe operation, install a safety system using safety doors, light curtains, safety floor mats, etc.

When a closed safeguard is open during robot motion, the safeguard interlock function operates. The robot stops immediately and enters into pause state. Then, all robot motors are turned OFF. The descriptions below explain how the safeguard input works.

Safeguard open	: The robot stops immediately, motors are turned OFF, and further operation is impossible until either the safeguard is closed or TEACH or TEST mode is turned ON and the enable circuit is engaged.
Safeguard closed	: The robot can automatically operate in unrestricted (high power) state.

Do not open the safeguard unnecessarily while motor is ON. Frequent safeguard inputs affect the life of the relay.

Rough normal relay life: Approximately 20,000 times

For the safeguard, do not use the E-STOP circuit.

For details of wiring instructions, refer to the following manual:

RC700 series Manual - Functions required for designing – 11. EMERGENCY

For details of Safeguard, refer to the following manual:

RC700 series Manual - Functions required for designing – 2.7.1 Connection to EMERGENCY Connector

NOTE

Test pulse cannot be used with the safeguard input of this model.

WARNING	■ The EMERGENCY connector on the controller has a safeguard input circuit to connect the safety device interlock switch. To protect operators working near the robot, be sure to connect the interlock switch and make sure that it works properly. ■ The time to stop the robot and the stopping distance by the safeguard interlock function will change depending on the conditions of use. Be sure to confirm that safety is ensured according to the installation environment of the robot.

Stopping distance when the safeguard is opened

The Manipulator in operation cannot stop immediately after the safeguard is opened. In addition, stopping time and stopping distance vary by following factors:

Hand weight	WEIGHT Setting	ACCEL Setting
Workpiece weight	SPEED Setting	Posture etc.

For stopping time and stopping distance of the Manipulator, refer to "*Appendix C: Stopping Time and Stopping Distance When the Safeguard is Opened*".

1.6 Emergency Movement Without Drive Power

When the system is placed in emergency mode, push the arm or joint of the Manipulator by hand as shown below:

Arm #1 Push the arm by hand.

Arm #2 Push the arm by hand.

Joint #3 The joint cannot be moved up/down by hand until the electromagnetic brake applied to the joint has been released. Move the joint up/down while pressing the brake release switch.

Joint #4 The shaft cannot be rotated by hand until the electromagnetic brake applied to the shaft has been released.
Move the shaft while pressing the brake release switch.

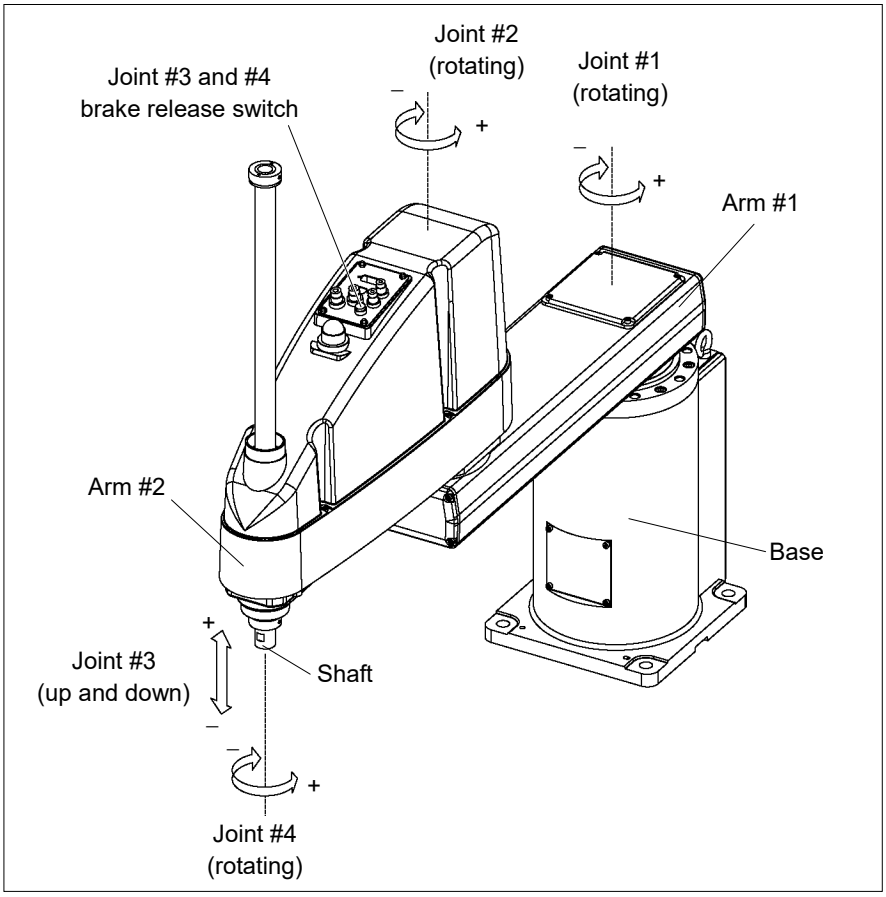

NOTE

The brake release switch affects both Joints #3 and #4. When the brake release switch is pressed in emergency mode, the brakes for both Joints #3 and #4 are released simultaneously.

Be careful of the shaft falling and rotating while the brake release switch is pressed because the shaft may be lowered by the weight of an end effector.

1.7 ACCELS Setting for CP Motions

To make the Manipulator move in CP motion, see the following and set ACCELS properly according to the tip load and the Z-axis height.

NOTE ☞ Improper setting may cause following problems.

Reduction of the life and damage of the ball screw spline

Set ACCELS as follows according to the Z-axis height.

ACCELS setting value by Z-axis position and tip load

G10

Z position (mm)	Tip load	
	5kg or less	10kg or less
0 > Z >= - 100	25000 or less	18000 or less
-100 > Z >= - 200		11000 or less
- 200 > Z >= - 300	15000 or less	7500 or less
- 300 > Z >= - 420	11000 or less	5500 or less

G20

Z position (mm)	Tip load			
	5kg or less	10kg or less	15kg or less	20kg or less
0 > Z >= - 100	25000 or less	18000 or less	12000 or less	9000 or less
-100 > Z >= - 200		11000 or less	7000 or less	5500 or less
- 200 > Z >= - 300	15000 or less	7500 or less	5000 or less	3500 or less
- 300 > Z >= - 420	11000 or less	5500 or less	3500 or less	2500 or less

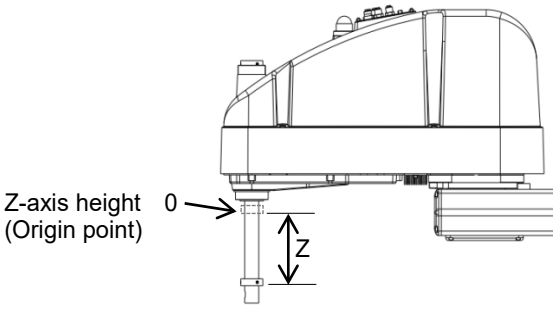

If the Manipulator is operated in CP motion with the wrong set values, make sure to check the following point.

Whether the ball screw spline shaft is deformed or bent

1.8 Warning Labels

The Manipulator has the following warning labels.

The warning labels are attached around the locations where specific dangers exist.
Be sure to comply with descriptions and warnings on the labels to operate and maintain the Manipulator safely.
Do not tear, damage, or remove the warning labels. Use meticulous care when handling those parts or units to which the following warning labels are attached as well as the nearby areas.

Location	Warning Label	NOTE
A		Before loosening the base mounting screws, hold the arm and secure it tightly with a band to prevent hands or fingers from being caught in the Manipulator.
B		Do not enter the work space when the Manipulators operating. It is extremely hazardous since the Arm may collide and cause serious safety problems,
C		Hazardous voltage exists while the Manipulator is ON. To avoid electric shock, do not touch any internal electric parts.

Location	Warning Label	NOTE
D		You can catch your hand or fingers between the shaft and cover when bringing your hand close to moving parts. * Manipulators with bellows do not have this label since there is no danger of being your hand or fingers caught.
E		Be careful of the hand falling while the brake release switch is being pressed.
F		Only authorized personnel should perform sling work and operate a crane. When these operations are performed by unauthorized personnel, it is extremely hazardous and may result in serious bodily injury and/or severe equipment damage to the robot system.

Location	Label	NOTE
1	-	The product name, model name, serial number, information which laws and regulations are supported, product specifications, manufacturer, importer, date of manufacture, country of manufacture, etc. are listed. For details, see the label affixed to the product.

Location of Labels

Common

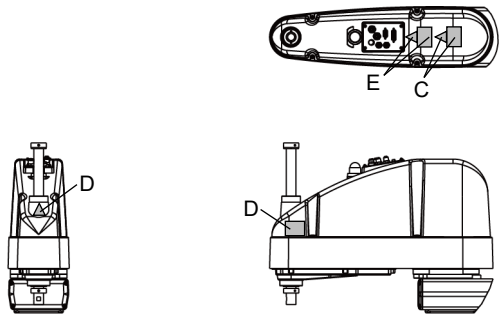

Table Top Mounting:

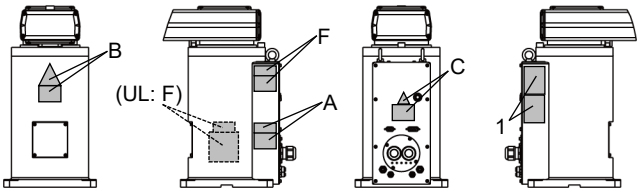

Ceiling Mounting

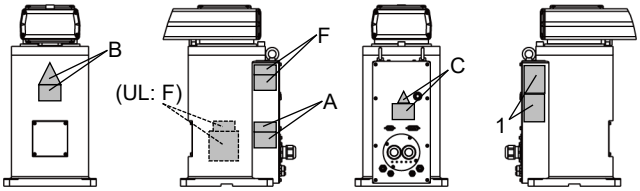

Wall Mounting

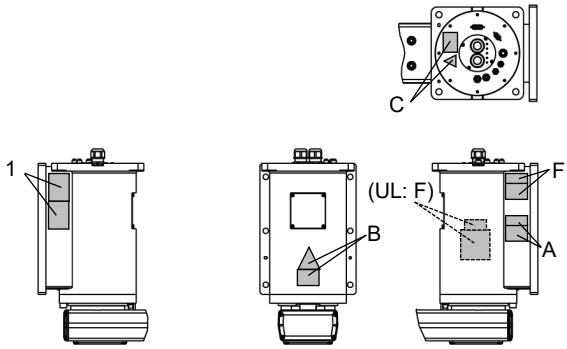

1.9 Response for Emergency or Malfunction

1.9.1 Collision

When the Manipulator collides with a mechanical stopper or peripheral device etc., discontinue use and contact the supplier.

1.9.2 Getting body caught in Manipulator

When the operator is caught between the Manipulator and a mechanical part such as a base table, press the emergency stop switch to release the brake on the subject arm, and then move the arm by hand.

Get body caught in the arms:
The break is not working. Move the arms manually.

Get body caught in the shafts:
The break is working. Press the break release switch and move the shafts.

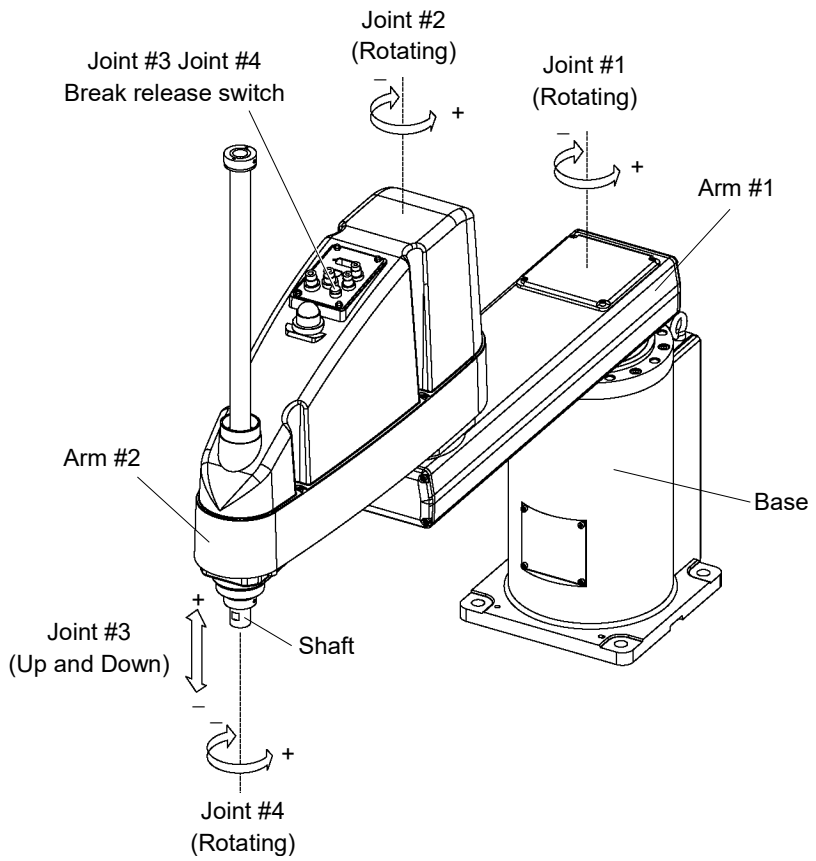

CAUTION	■ While pressing the break release switch, not only Joint #3 but also Joint #4 may move due to its own weight. Be careful of the shaft falling or rotating.

2. Specifications

2.1 Model Number and Model Differences

G10-85 4 S □ -UL

□	: Standard
-UL	: UL1740 certified

Type

□	: Table Top mounting
W	: Wall mounting
R	: Ceiling mounting

Environment

S	: Standard
C	: Cleanroom & ESD
D	: Protected : IP 54 (with bellows option)
P	: Protected : IP 65

Joint #3 stroke

1	: 180 mm (G10/G20***S*, D*) : 150 mm (G10/G20***C*, P*, D* bellows option)
4	: 420 mm (G10/G20***S*, D*) : 390 mm (G10/G20***C*, P*, D* bellows option)

Arm Length

65	: 650 mm (G10 series only)
85	: 850 mm
A0	: 1000 mm (G20 series only)

Series

G10	: G10 series
G20	: G20 series

Environment

Cleanroom-model

Cleanroom-model Manipulator includes additional features that reduce dust emitted by the Manipulator to enable use in clean room environments.

Protected-model (IP54, IP65)

The protected-model Manipulators operate under adverse conditions with dust and oily smoke.

G10/G20-***D*

Normal G10/G20-***D* Manipulators do not have bellows. The normal G10/G20-***D* Manipulator (without bellows option) operates under adverse conditions with oily mist. If necessary, select the bellows option at shipment.

The Manipulators with bellows (option) comply with grade of protection IP54 (IEC 60529, JIS C0920).

G10/G20-***P*

G10/G20-***P* Manipulators comply with grade of protection IP65 (IEC 60529, JIS C0920).

For details on the specifications, refer to *Appendix A: 2.4 Specifications*.

2.2 Part Names and Outer Dimensions

NOTE
G10-65***, G10-85*** manipulator of S/N: 1**** or later is different from other models in its form. For the detail, refer to *2.3.4 G10-65***, G10-85***: For S/N: 1**** or later*.

2.2.1 Table Top Mounting

Standard-model : G10/G20-***S

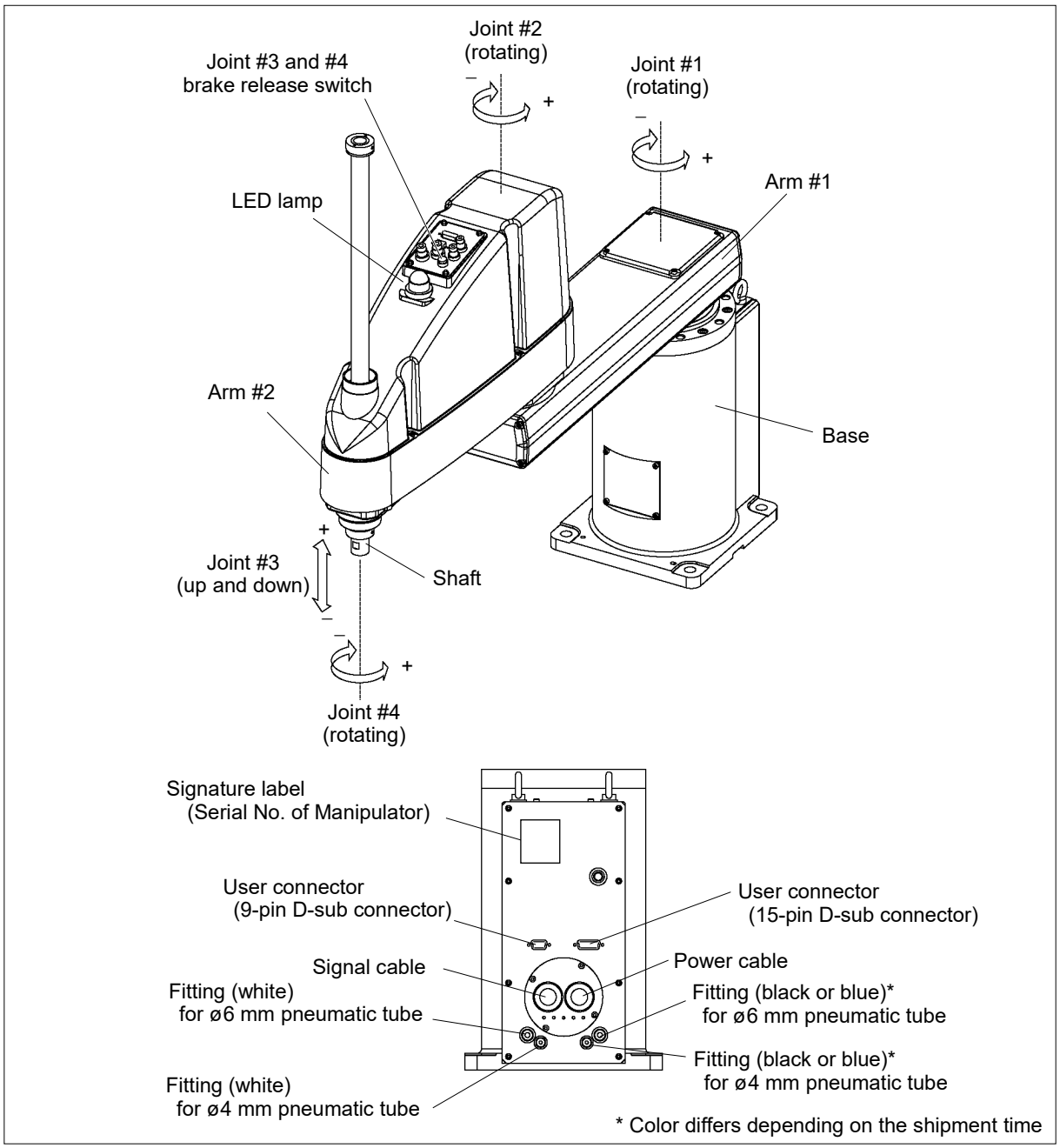

NOTE
- The brake release switch affects both Joints #3 and #4. When the brake release switch is pressed in emergency mode, the brakes for both Joints #3 and #4 are released simultaneously.
- When the LED lamp is lighting or the controller power is on, the current is being applied to the manipulator. Performing any work with the power ON is extremely hazardous and it may result in electric shock and/or improper function of the robot system. Make sure to turn OFF the controller power before the maintenance work.

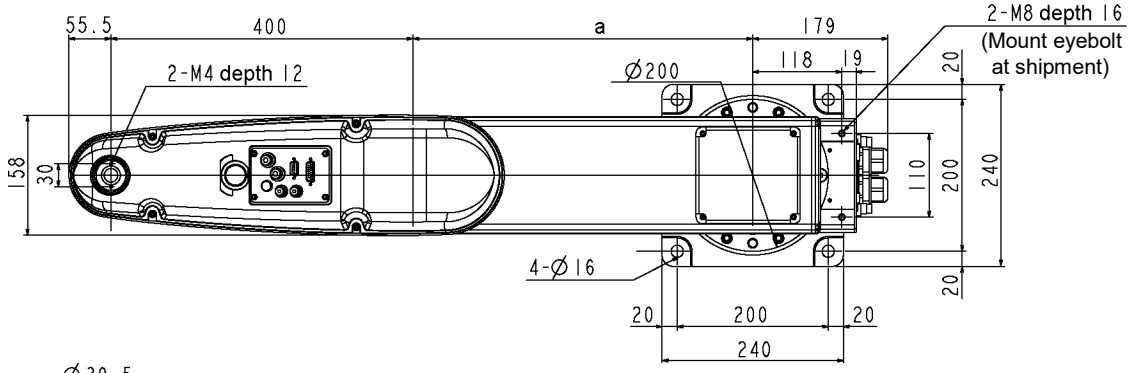

	G10-65*S	G10/G20-85*S	G20-A0*S
a	250	450	600

	G10/G20-**1S	G10/G20-**4S
b	180	420
c	813.5	1053.5
d	213.5	−26.5

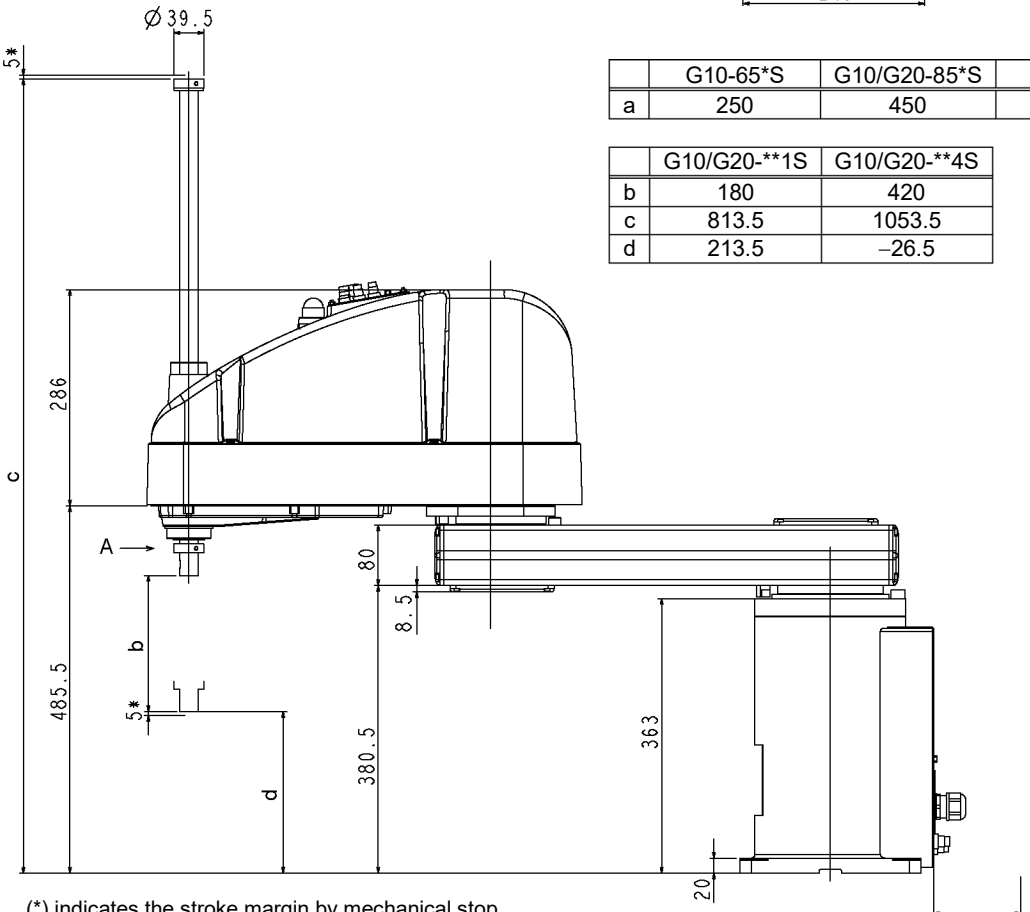

(*) indicates the stroke margin by mechanical stop.

90 or more
Space for cables

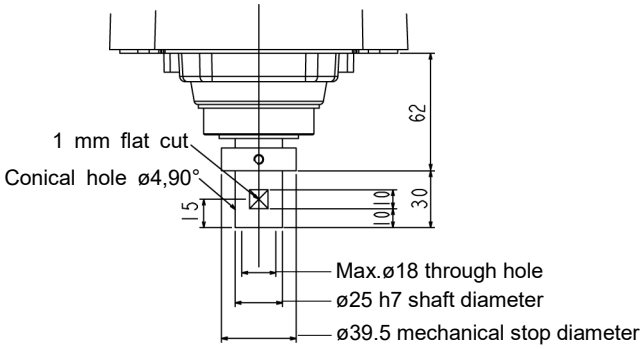

Detail of “A”
(Calibration point position of Joints #3 and #4)

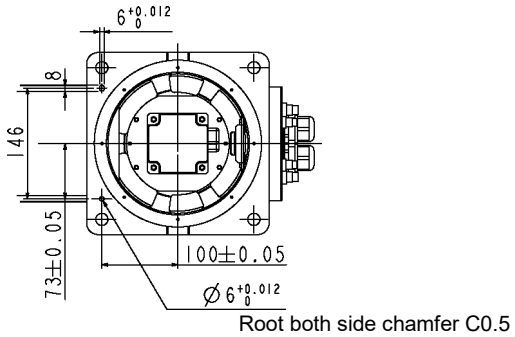

Reference through hole
(View from the bottom of the base)

Cleanroom-model G10/G20-***C

The following figure shows the additional parts and specifications for the Table Top mounting Cleanroom-model when compared with the Standard-model in appearance.

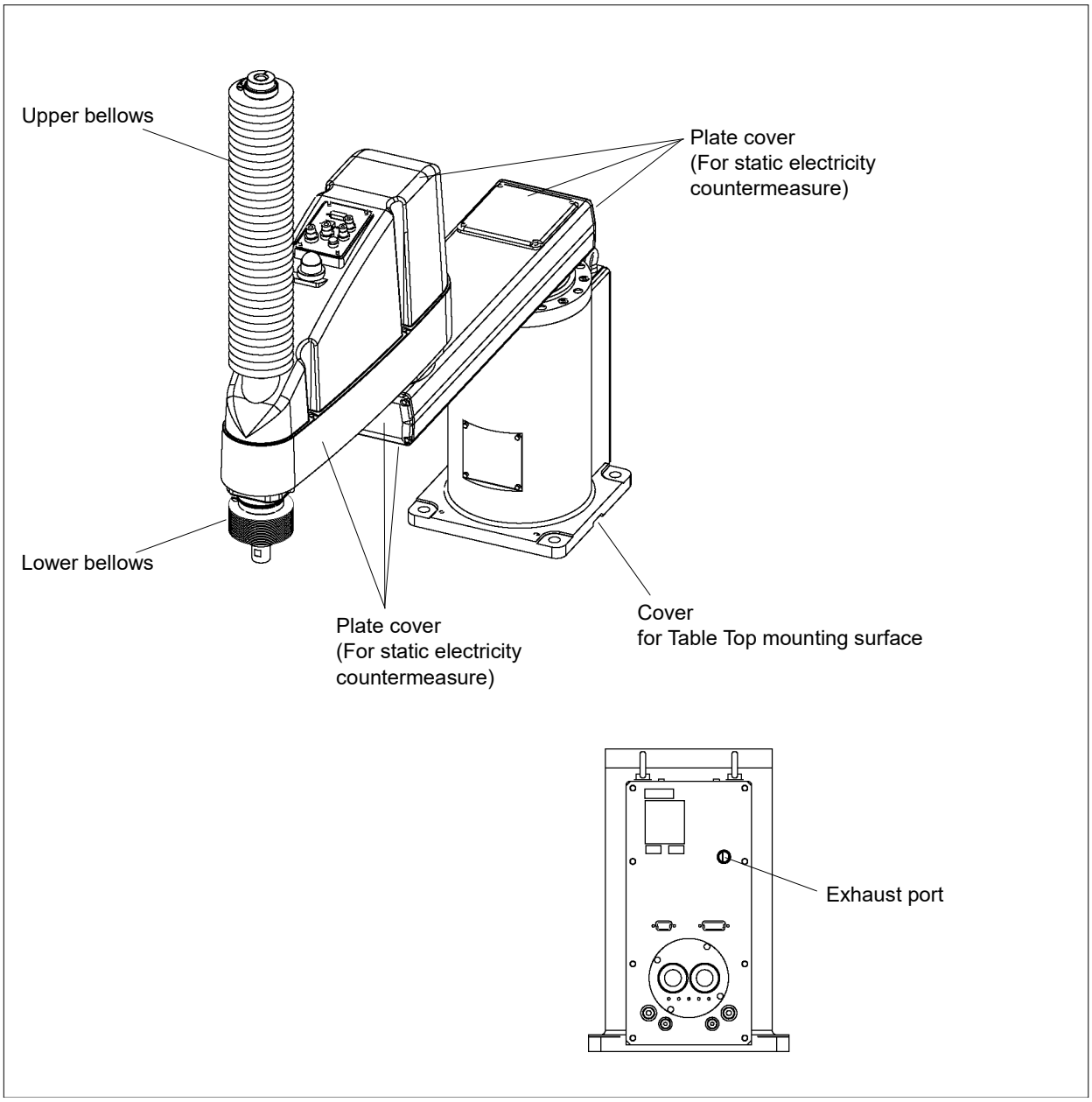

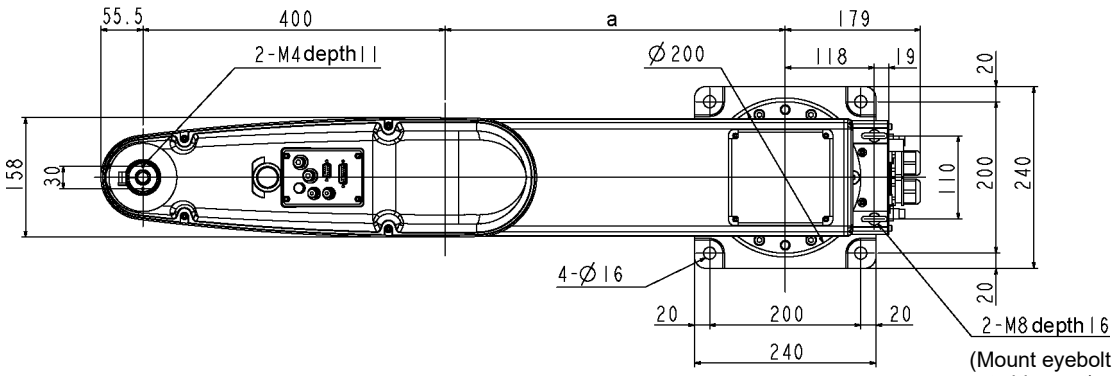

	G10-65*C	G10/G20-85*C	G20-A0*C
a	250	450	600

	G10/G20-**1C	G10/G20-**4C
b	150	390
c	870.5	1129.5
d	205.5	–34.5

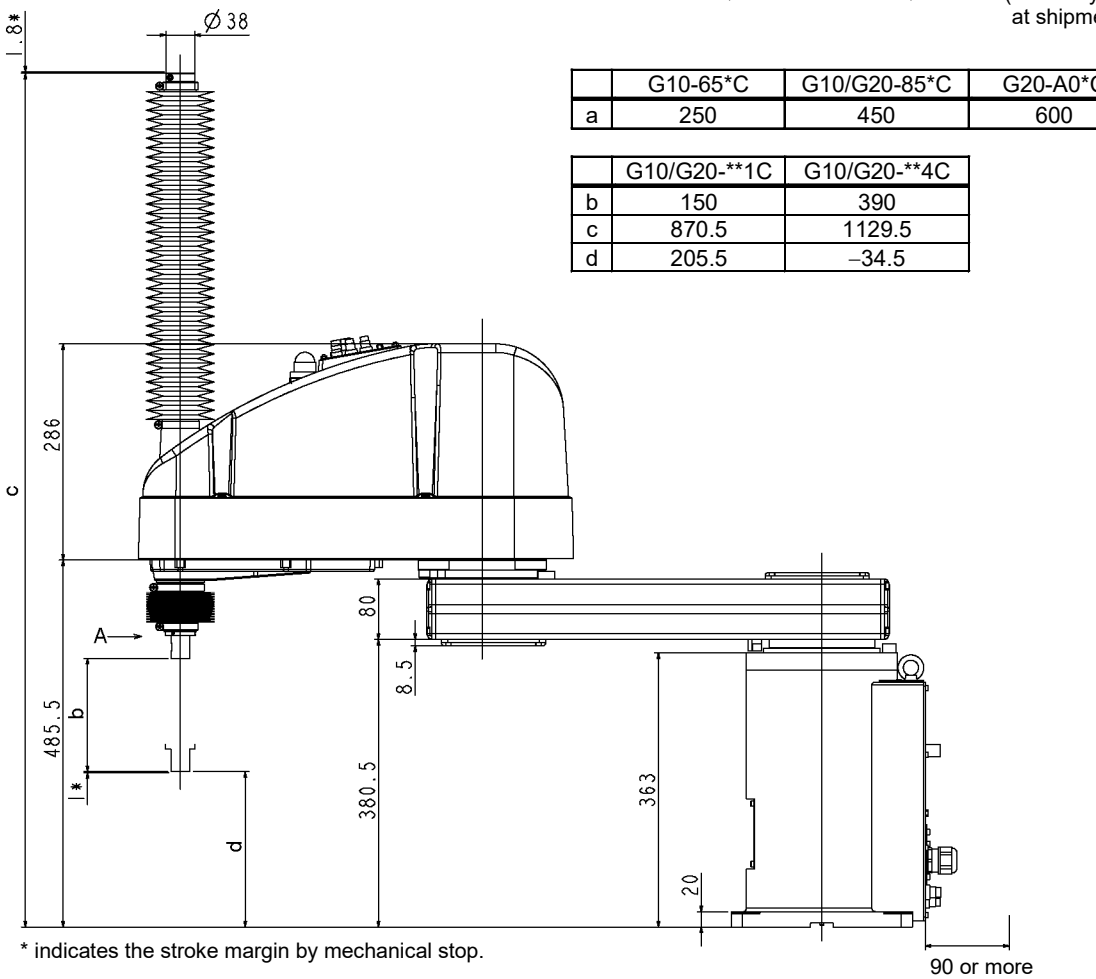

* indicates the stroke margin by mechanical stop.

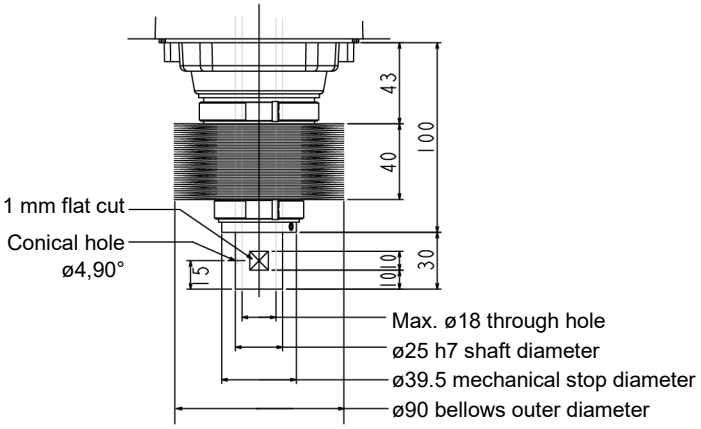

Detail of “A”
(Calibration point position of Joint #3 and #4)

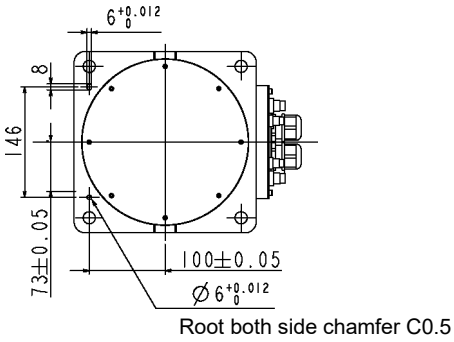

Reference through hole
(View from the bottom of the base)

Protected-model G10/G20-***D, P

The following figure shows the additional parts and specifications for the Table Top mounting Protected-model when compared with the Standard-model in appearance.
Normal G10/G20-***D* Manipulators do not have bellows. If necessary, select the bellows option at shipment.
The following figure is a Manipulator with bellows option.
For dimensions of the end part of G10/G20-***D* without bellows option, refer to G10/G20-***S.

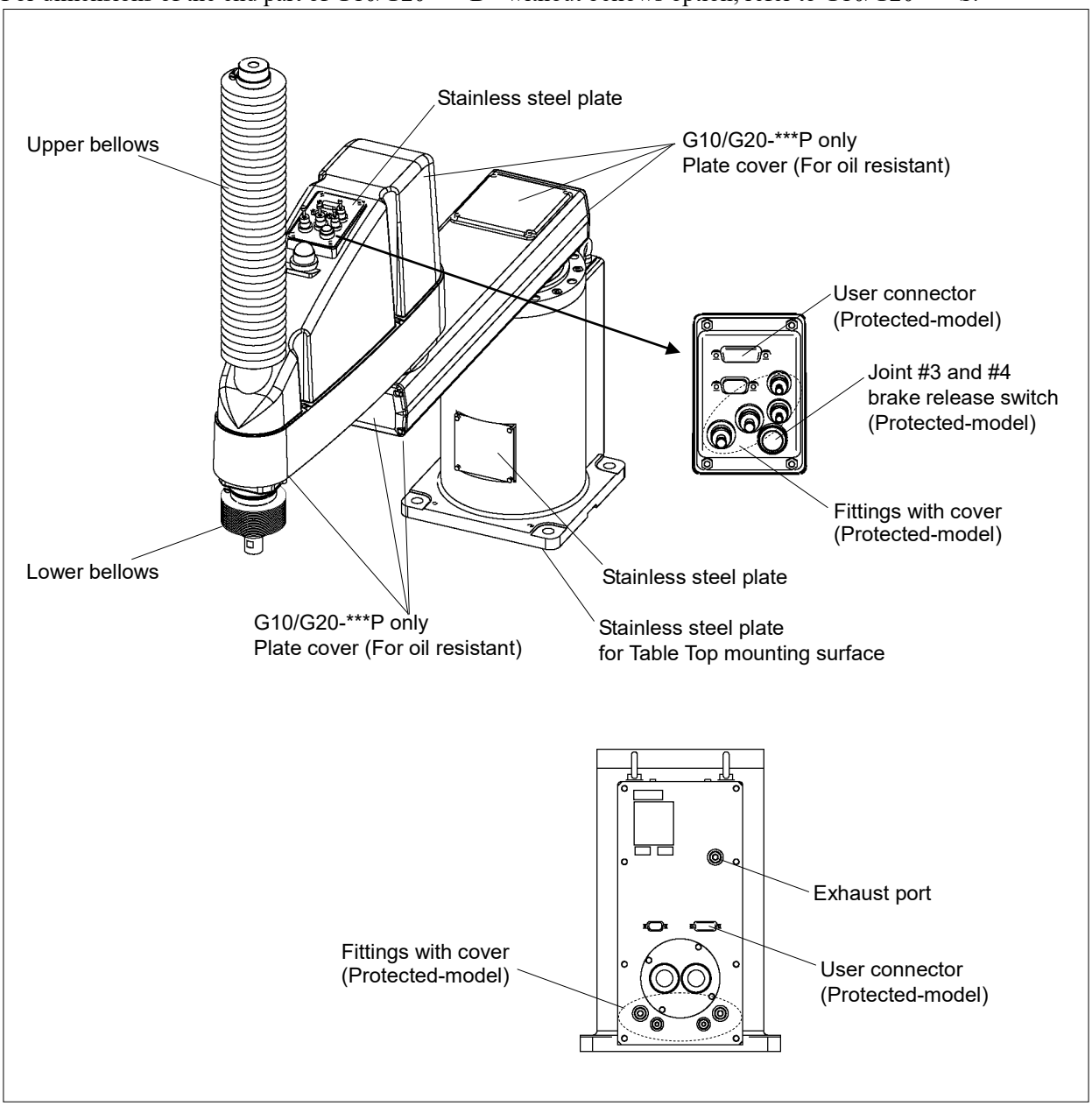

NOTE ☞ For Protected-model, all the screws used for outer parts are stainless steel screws. (Excluding the screw used for mechanical stop.)

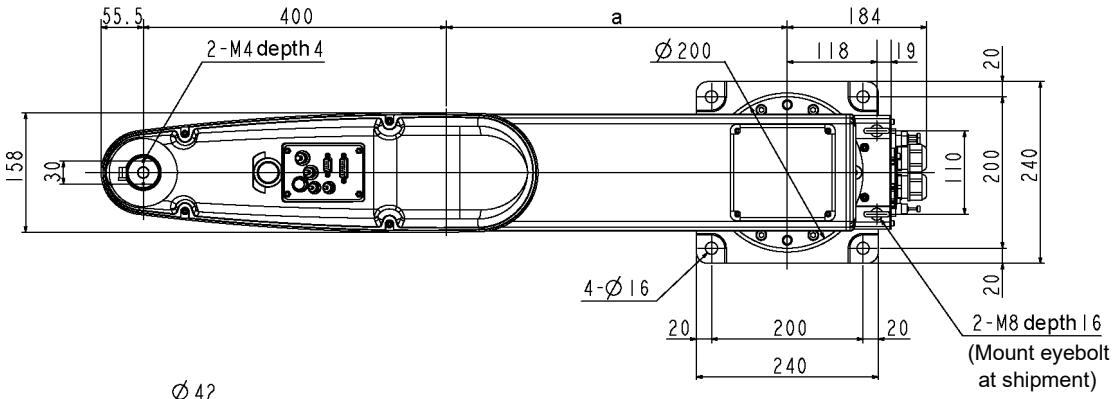

	G10-65*P	G10/G20-85*P	G20-A0*P
a	250	450	600

	G10/G20-**1P	G10/G20-**4P
b	150	390
c	874	1133
d	205.5	–34.5

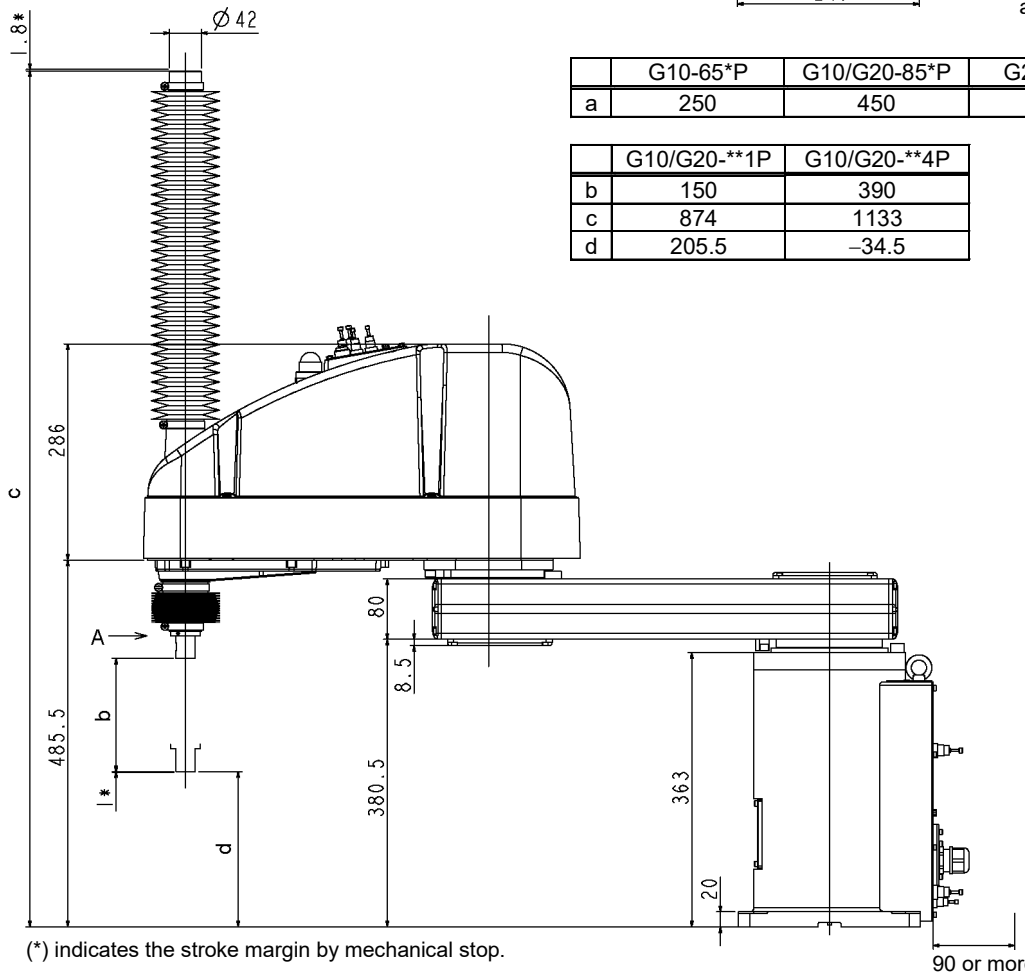

(*) indicates the stroke margin by mechanical stop.

90 or more
Space for cables

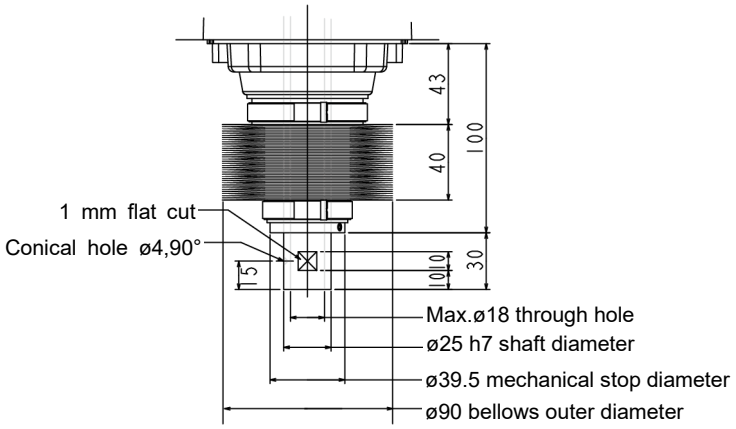

Detail of “A”
(Calibration point position of Joints #3 and #4)

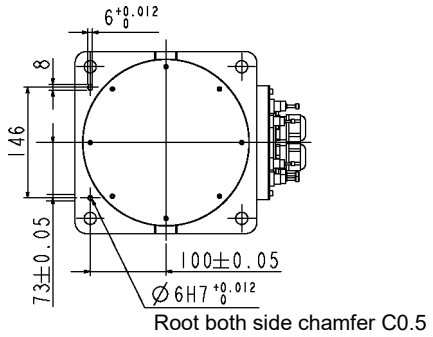

Reference through hole
(View from the bottom of the base)

2.2.2 Wall Mounting

Standard-model G10/G20-***SW

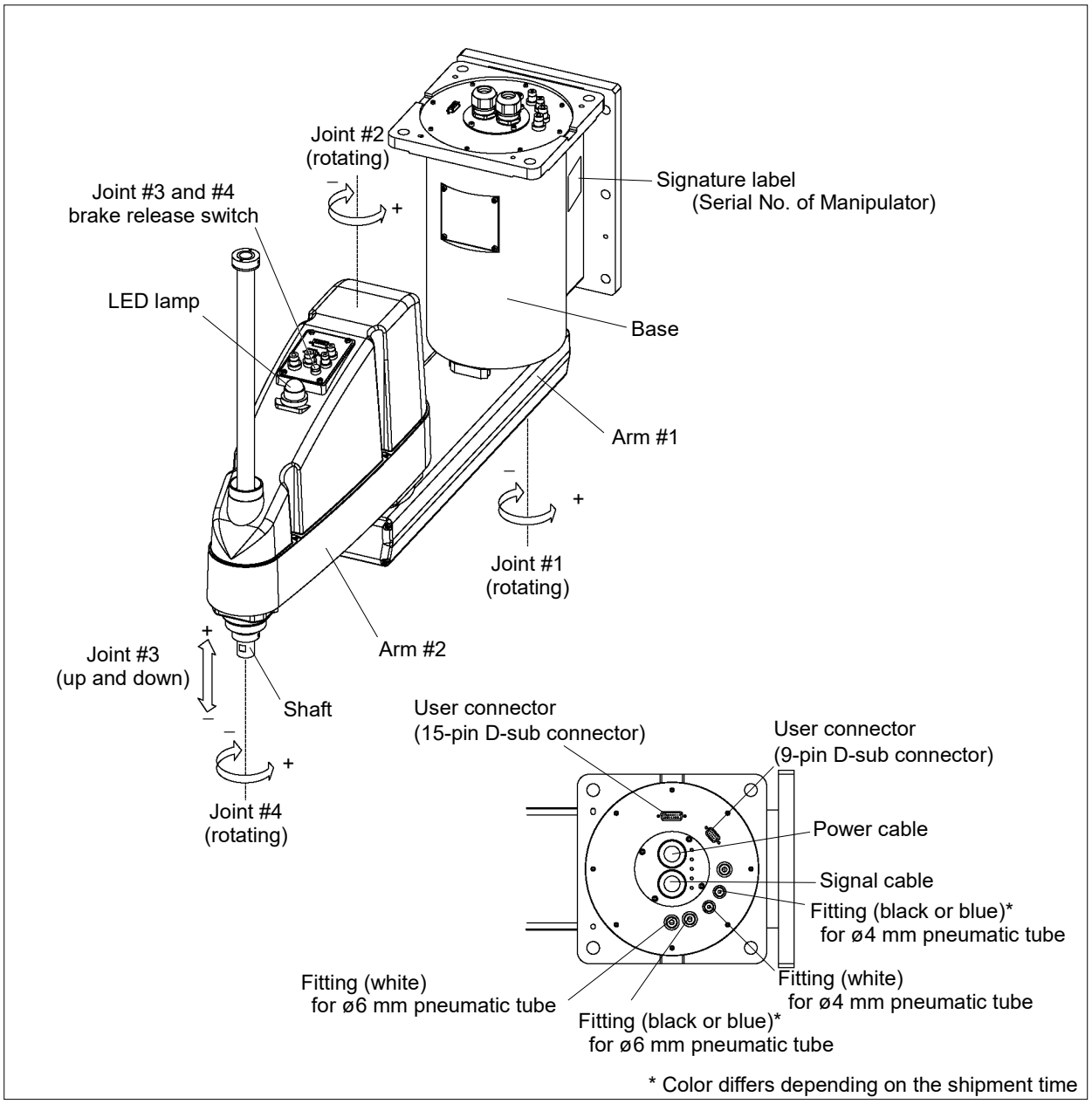

NOTE

- The brake release switch affects both Joints #3 and #4. When the brake release switch is pressed in emergency mode, the brakes for both Joints #3 and #4 are released simultaneously.
- When the LED lamp is lighting or the controller power is on, the current is being applied to the manipulator. Performing any work with the power ON is extremely hazardous and it may result in electric shock and/or improper function of the robot system. Make sure to turn OFF the controller power before the maintenance work.

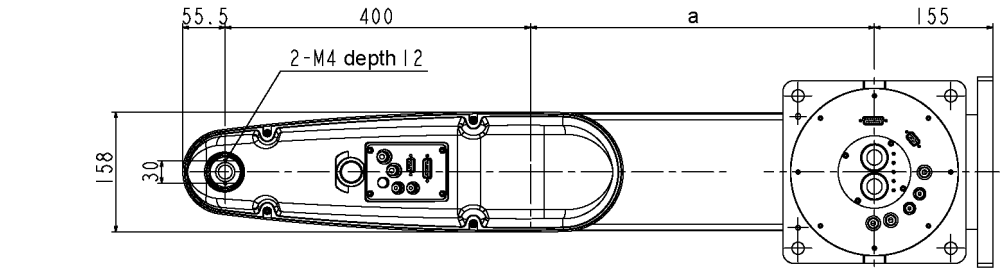

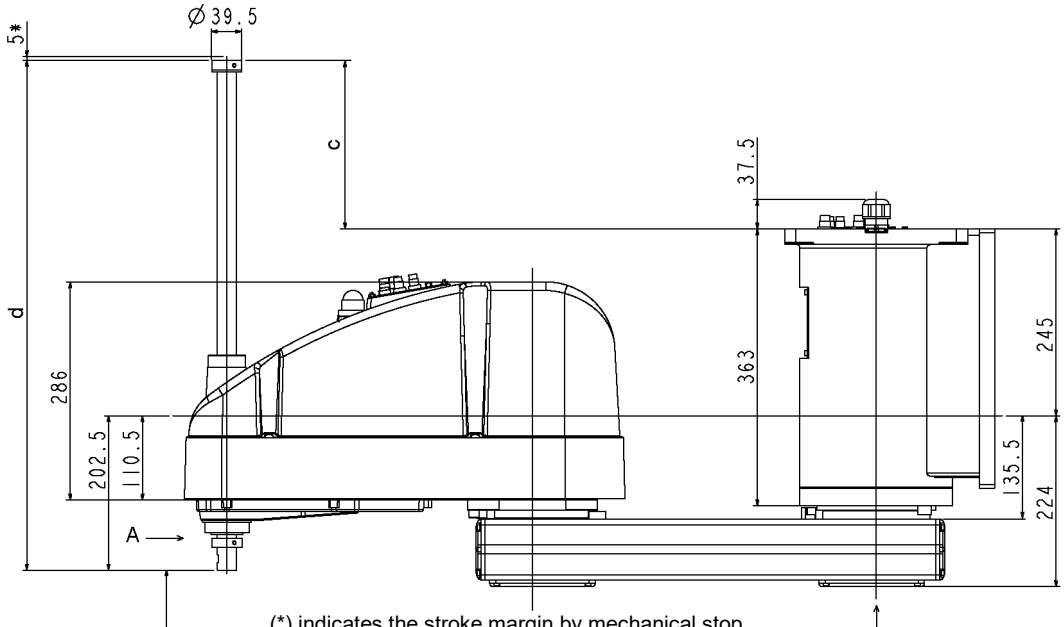

(*) indicates the stroke margin by mechanical stop.

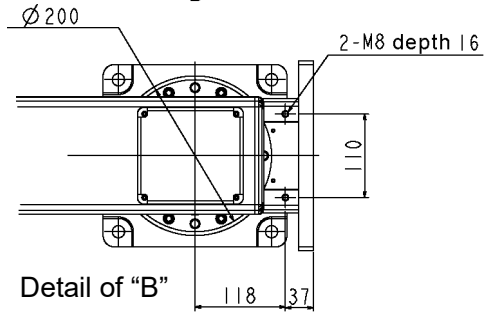

Detail of “B”

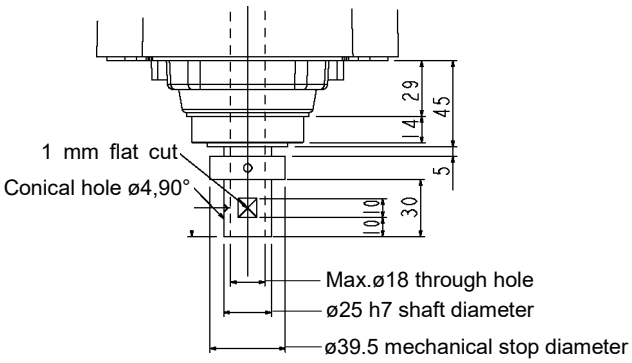

Detail of “A”
(Calibration point position of Joints #3 and #4)

	G10-65*SW	G10/G20-85*SW	G20-A0*SW
a	250	450	600

	G10/G20-**1SW	G10/G20-**4SW
b	180	420
c	−27.5	212.5
d	420	660

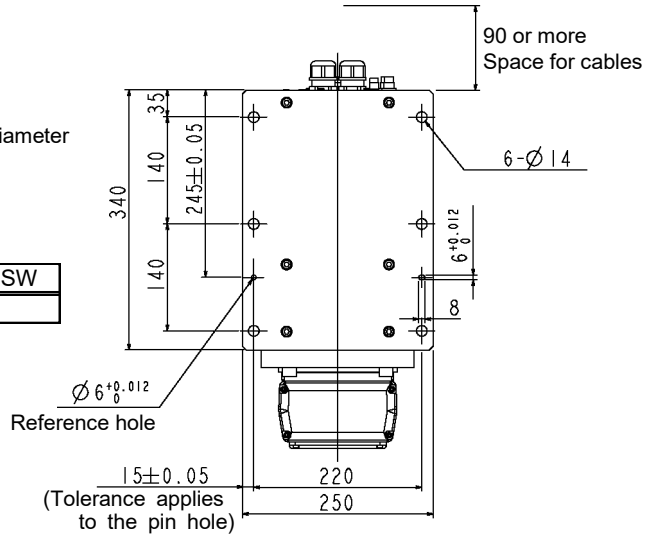

Reference through hole
(View from the bottom of the base)

Cleanroom-model G10/G20-***CW

The following figure shows the additional parts and specifications for the Wall mounting Cleanroom-model when compared with the Standard-model in appearance.

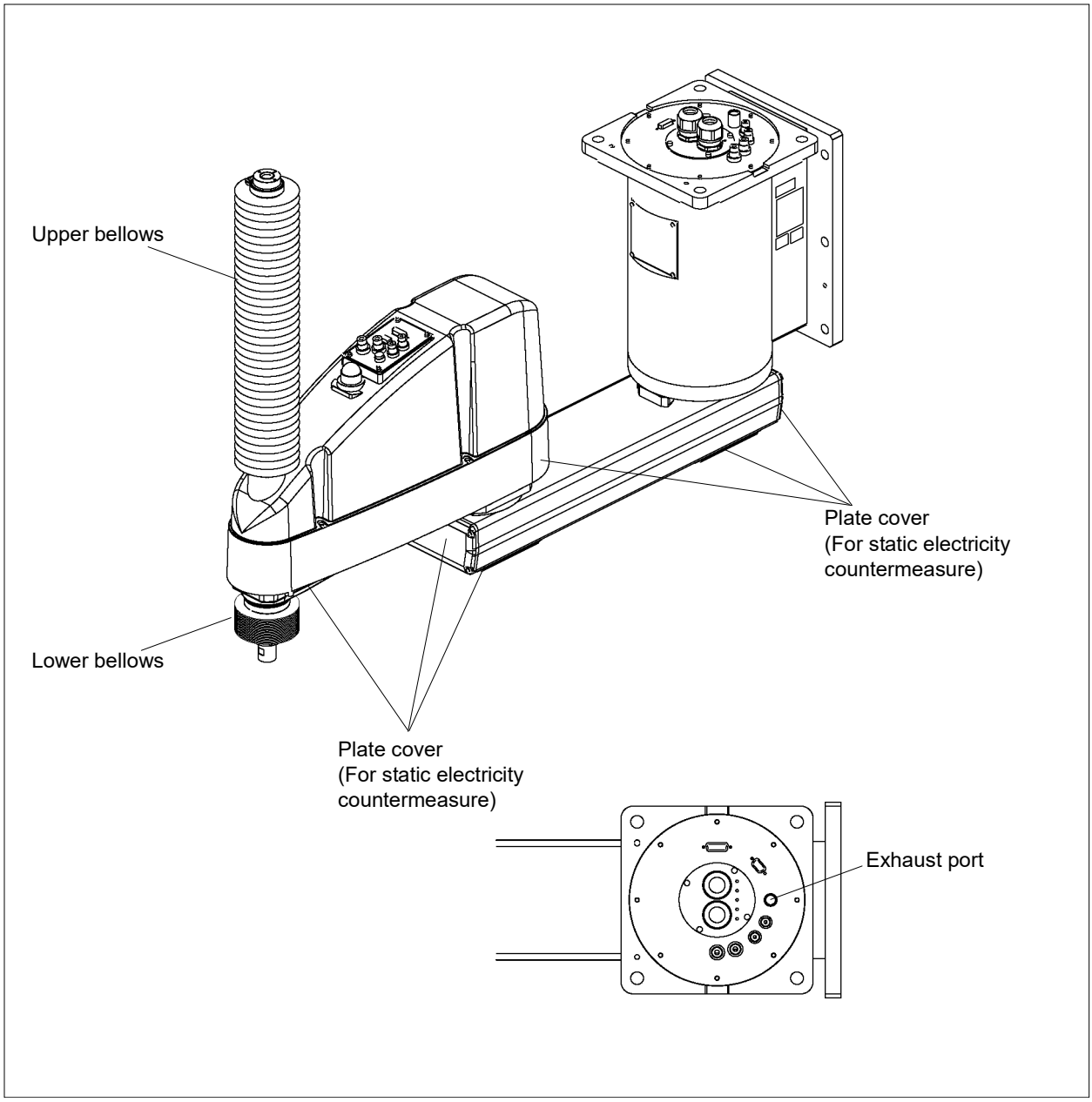

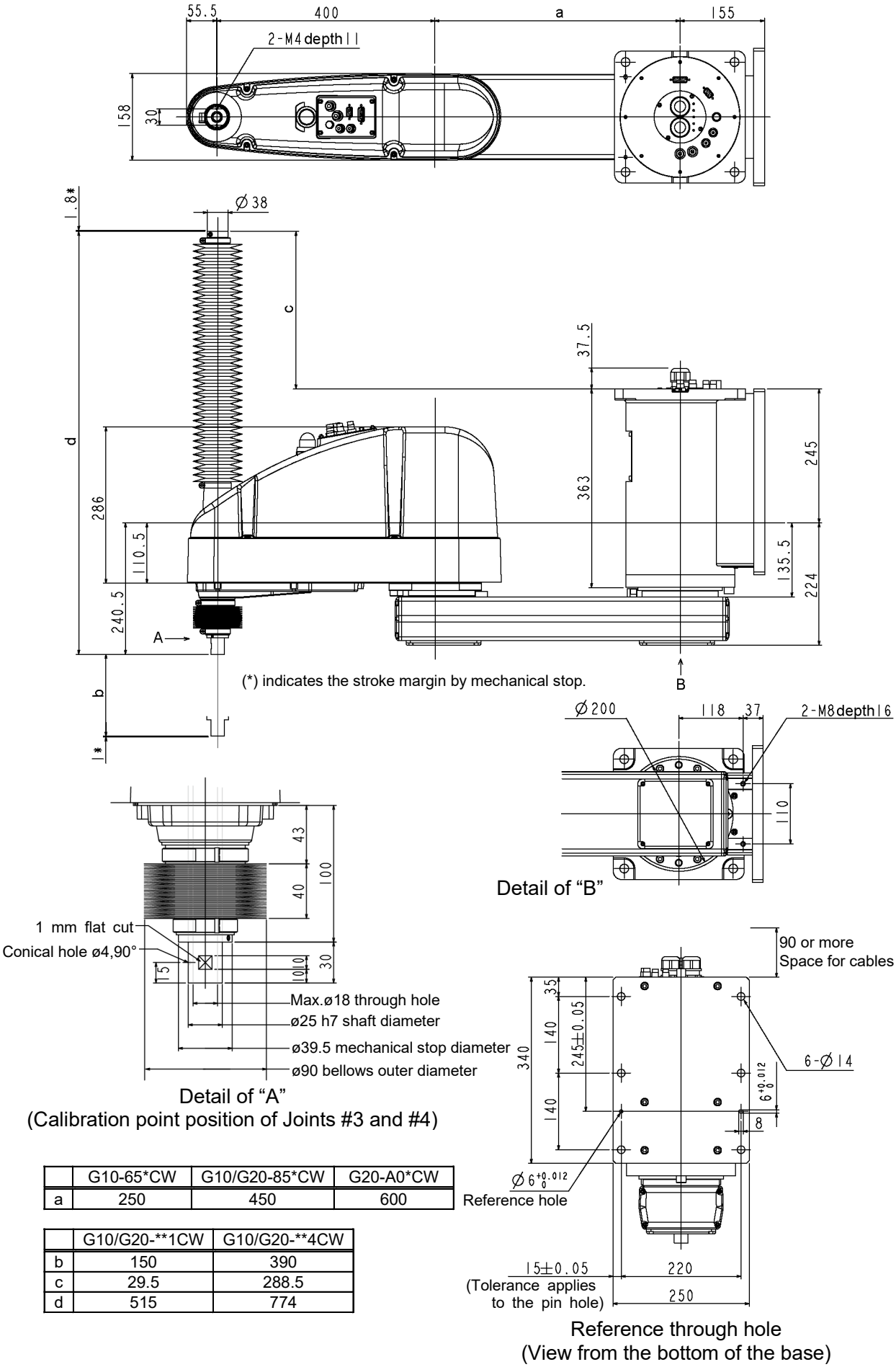

	G10-65*CW	G10/G20-85*CW	G20-A0*CW
a	250	450	600

	G10/G20-**1CW	G10/G20-**4CW
b	150	390
c	29.5	288.5
d	515	774

Protected-model G10/G20-***DW, PW

The following figure shows the additional parts and specifications for the Wall mounting Protected-model when compared with the Standard-model in appearance.
Normal G10/G20-***DW Manipulators do not have bellows. If necessary, select the bellows option at shipment. The following figure is a Manipulator with bellows option.
For dimensions of the end part of G10/G20-***DW without bellows option, refer to G10/G20-***SW.

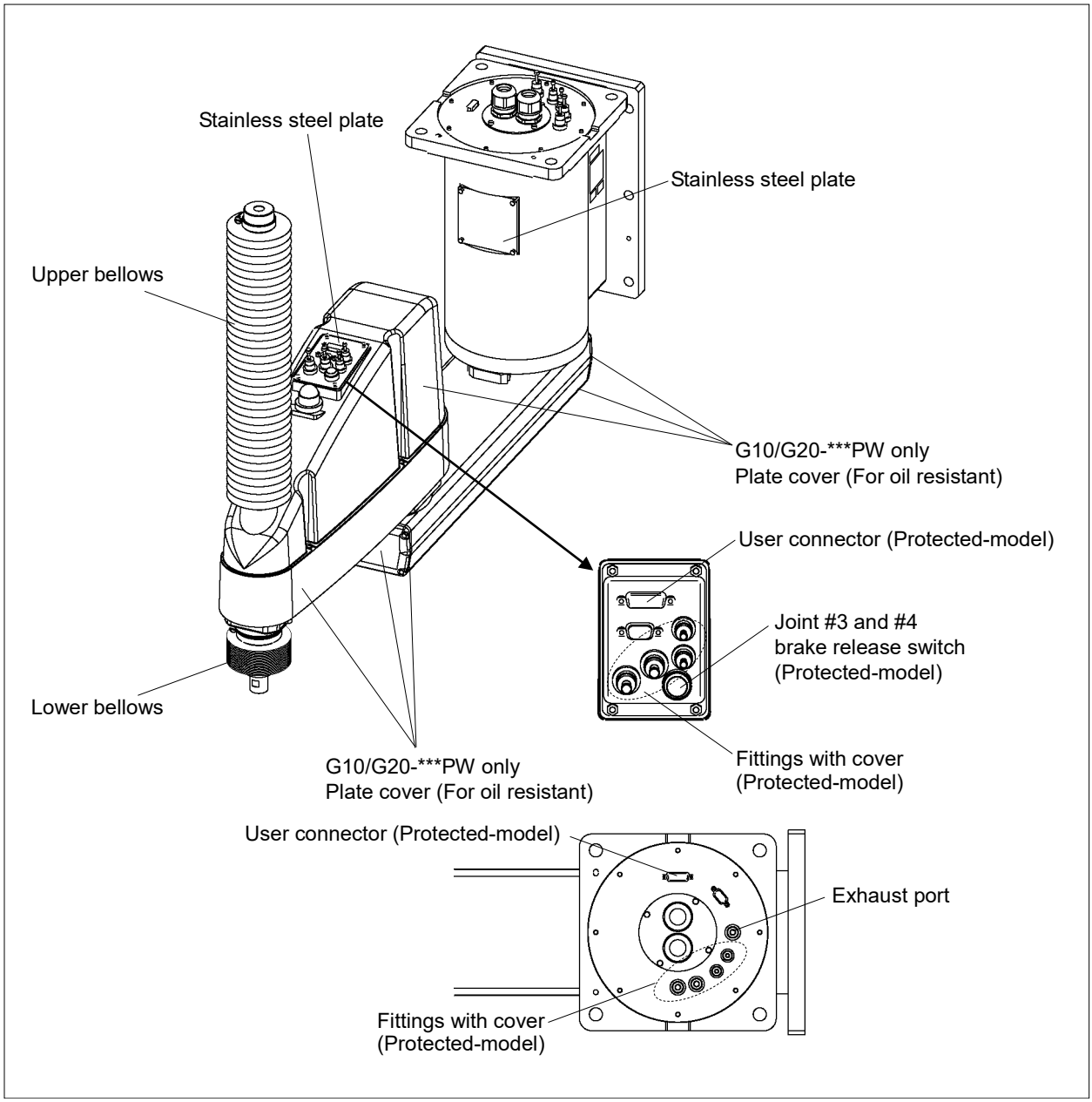

NOTE ☞ For Protected-model, all the screws used for outer parts are stainless steel screws. (Excluding the screw used for mechanical stop.)

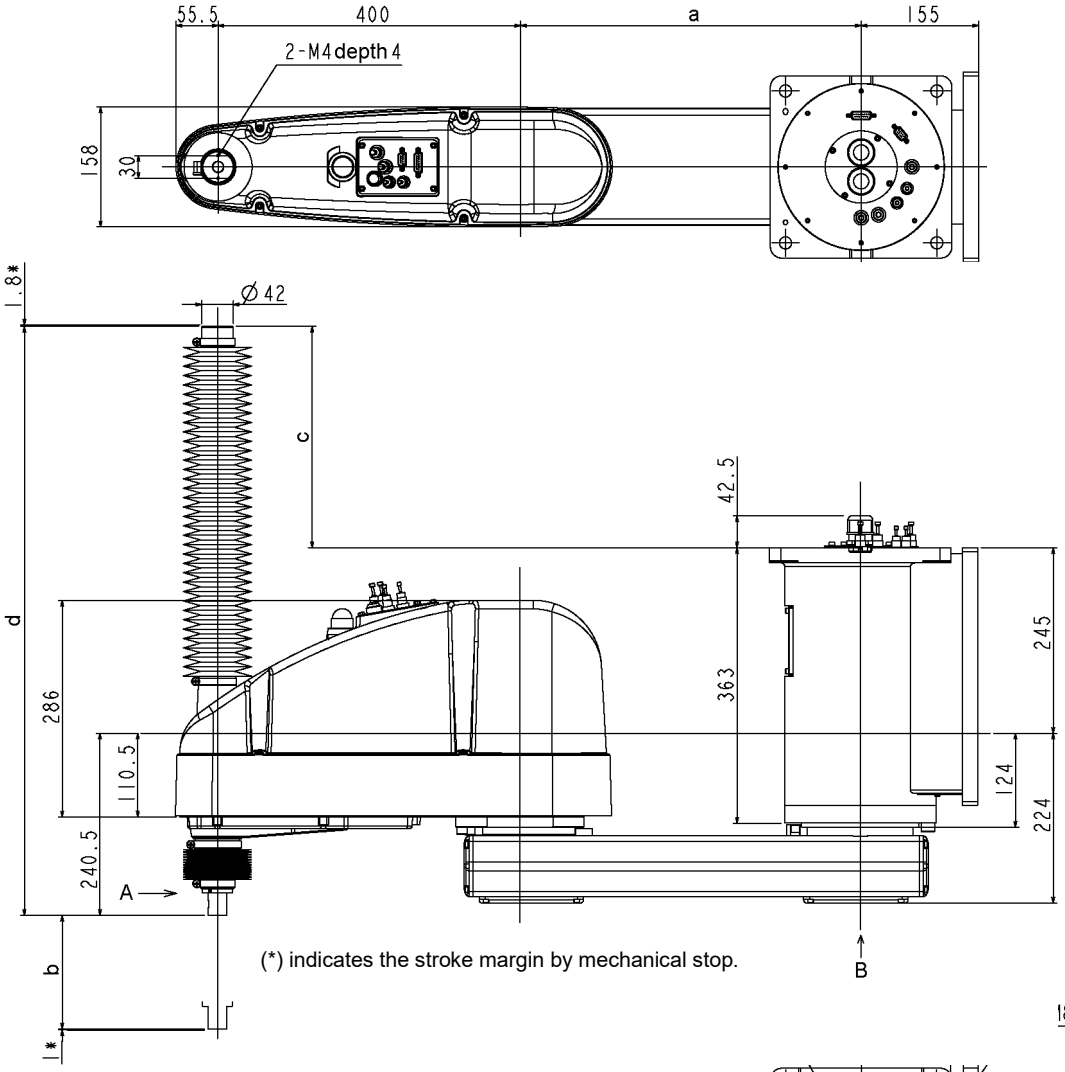

(*) indicates the stroke margin by mechanical stop.

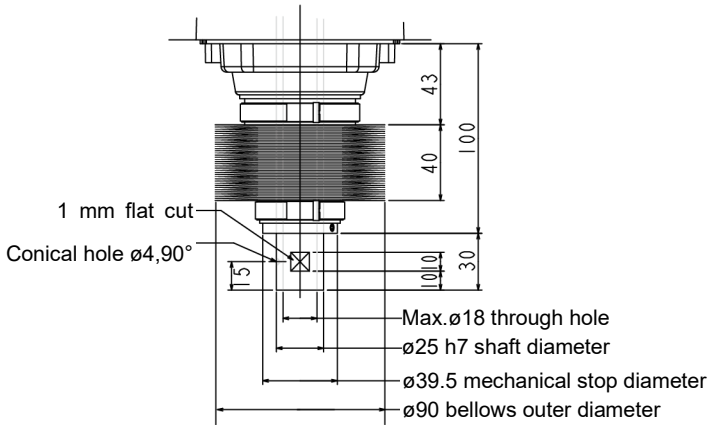

Detail of "A"
(Calibration point position of Joints #3 and #4)

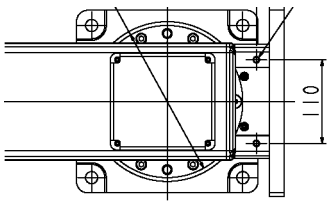

Detail of "B"

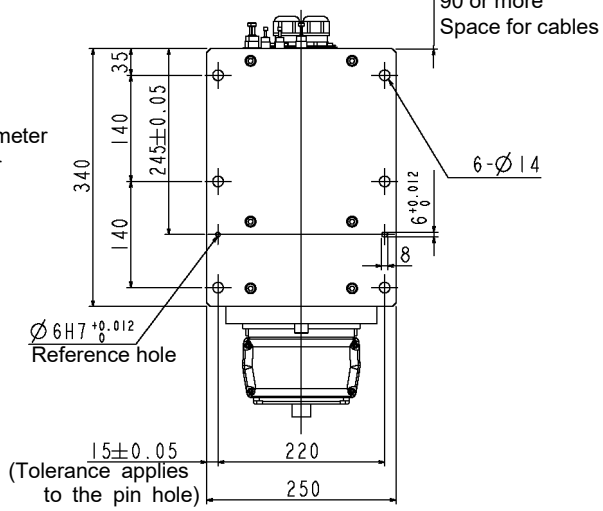

Reference through hole
(View from the bottom of the base)

	G10-65*PW	G10/G20-85*PW	G20-A0*PW
a	250	450	600

	G10/G20-**1PW	G10/G20-**4PW
b	150	390
c	33	292
d	518.5	777.5

2.2.3 Ceiling Mounting

Standard-model G10/G20-***SR

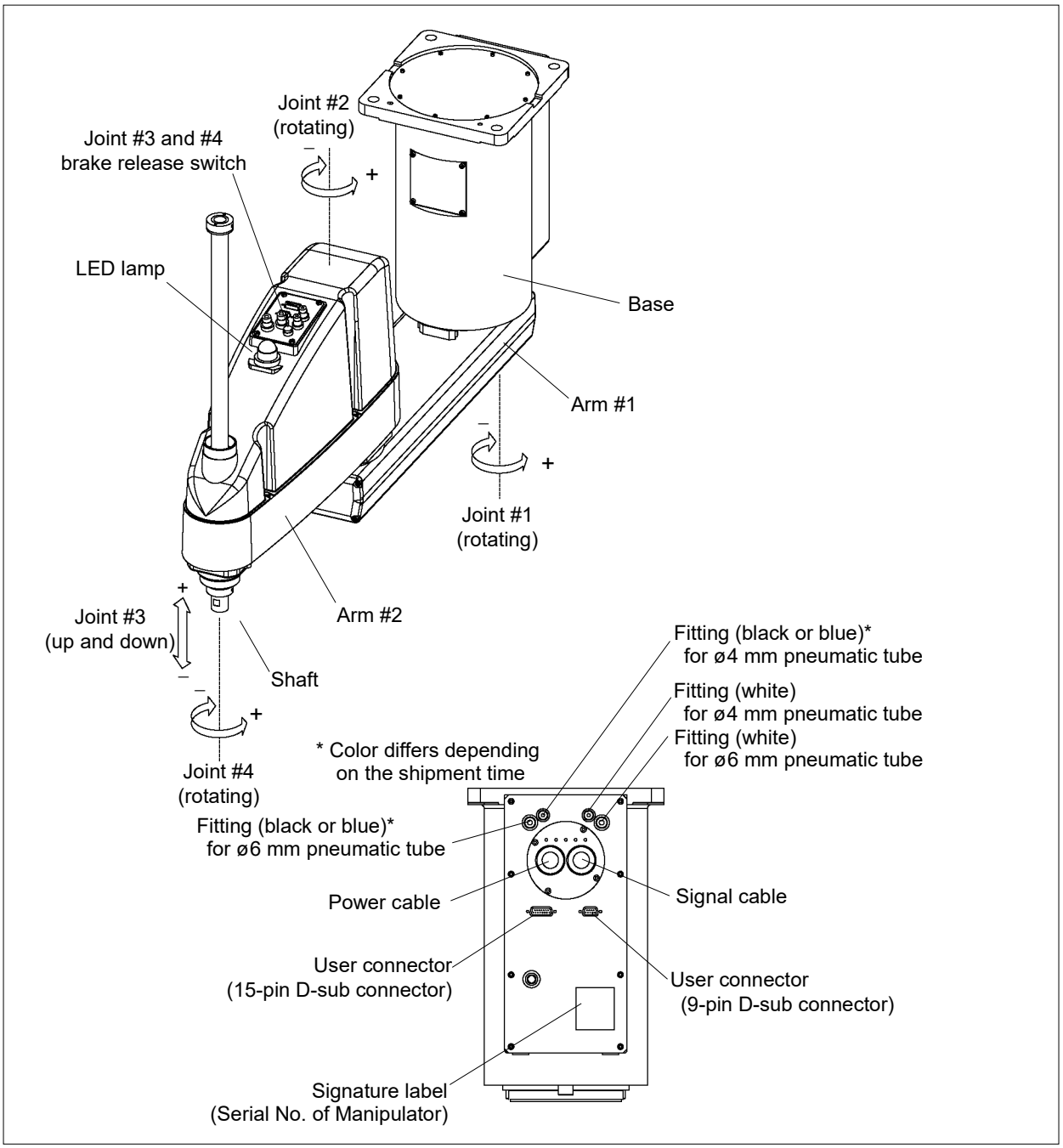

NOTE

- The brake release switch affects both Joints #3 and #4. When the brake release switch is pressed in emergency mode, the brakes for both Joints #3 and #4 are released simultaneously. (For G6-**1**, Joint #4 has no brake on it.)
- When the LED lamp is lighting or the controller power is on, the current is being applied to the manipulator. Performing any work with the power ON is extremely hazardous and it may result in electric shock and/or improper function of the robot system. Make sure to turn OFF the controller power before the maintenance work.

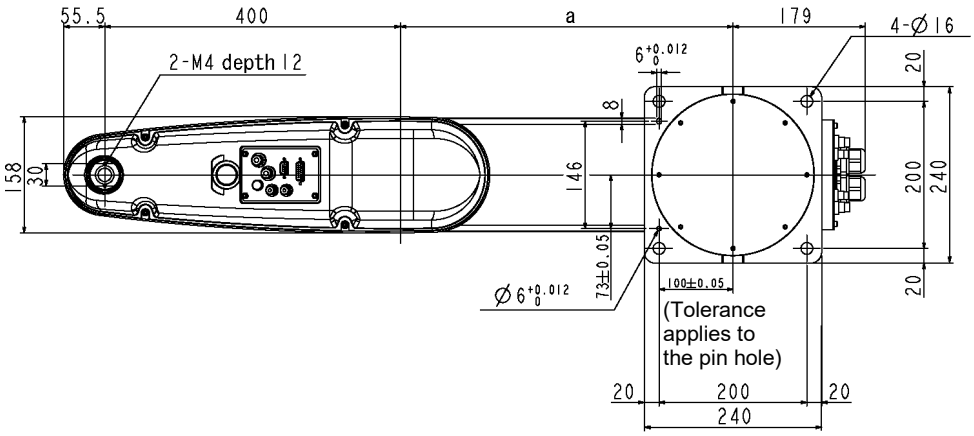

	G10-65*SR	G10/G20-85*SR	G20-A0*SR
a	250	450	600

	G10/G20-**1SR	G10/G20-**4SR
b	180	420
c	−27.5	212.5
d	420	660

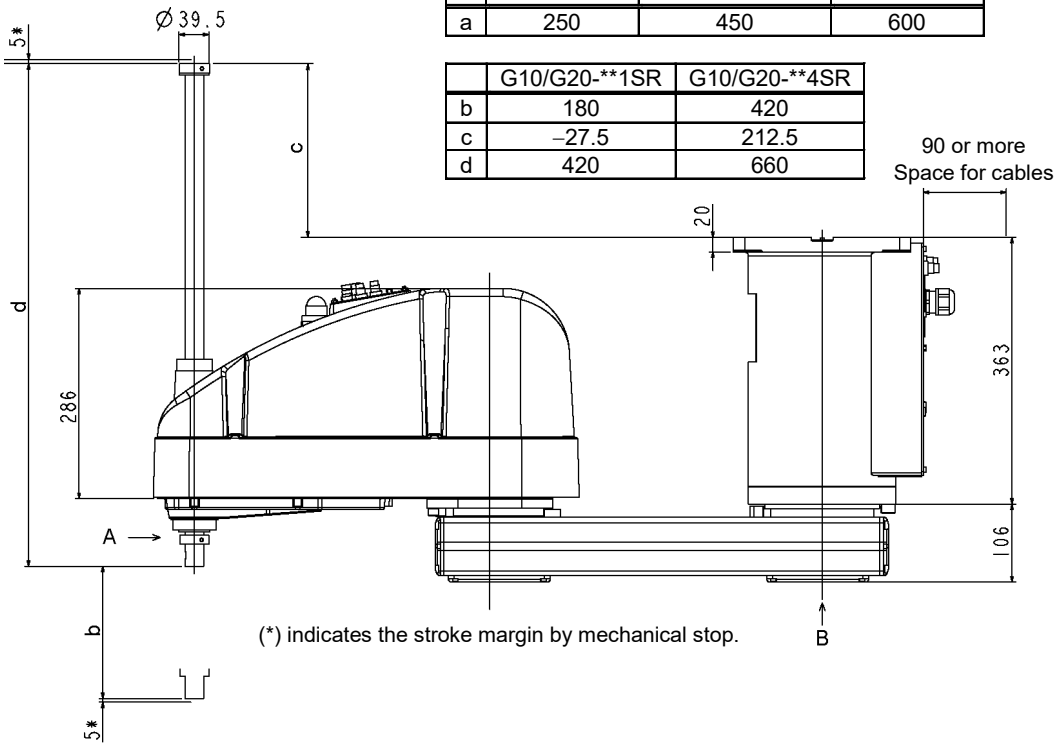

(*) indicates the stroke margin by mechanical stop.

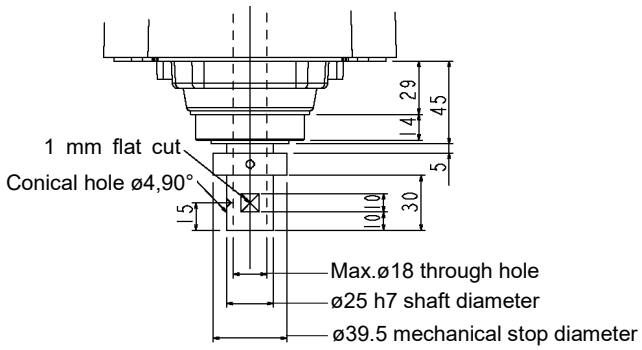

Detail of “A”
(Calibration point position of Joints #3 and #4)

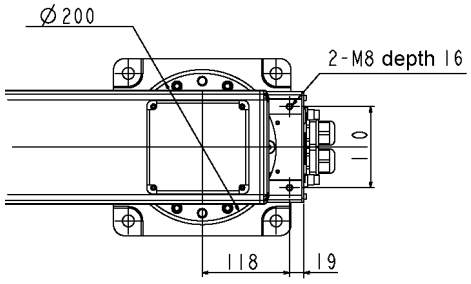

Detail of “B”

Cleanroom-model G10/G20-***CR

The following figure shows the additional parts and specifications for the Ceiling mounting Cleanroom-model when compared with the Standard-model in appearance.

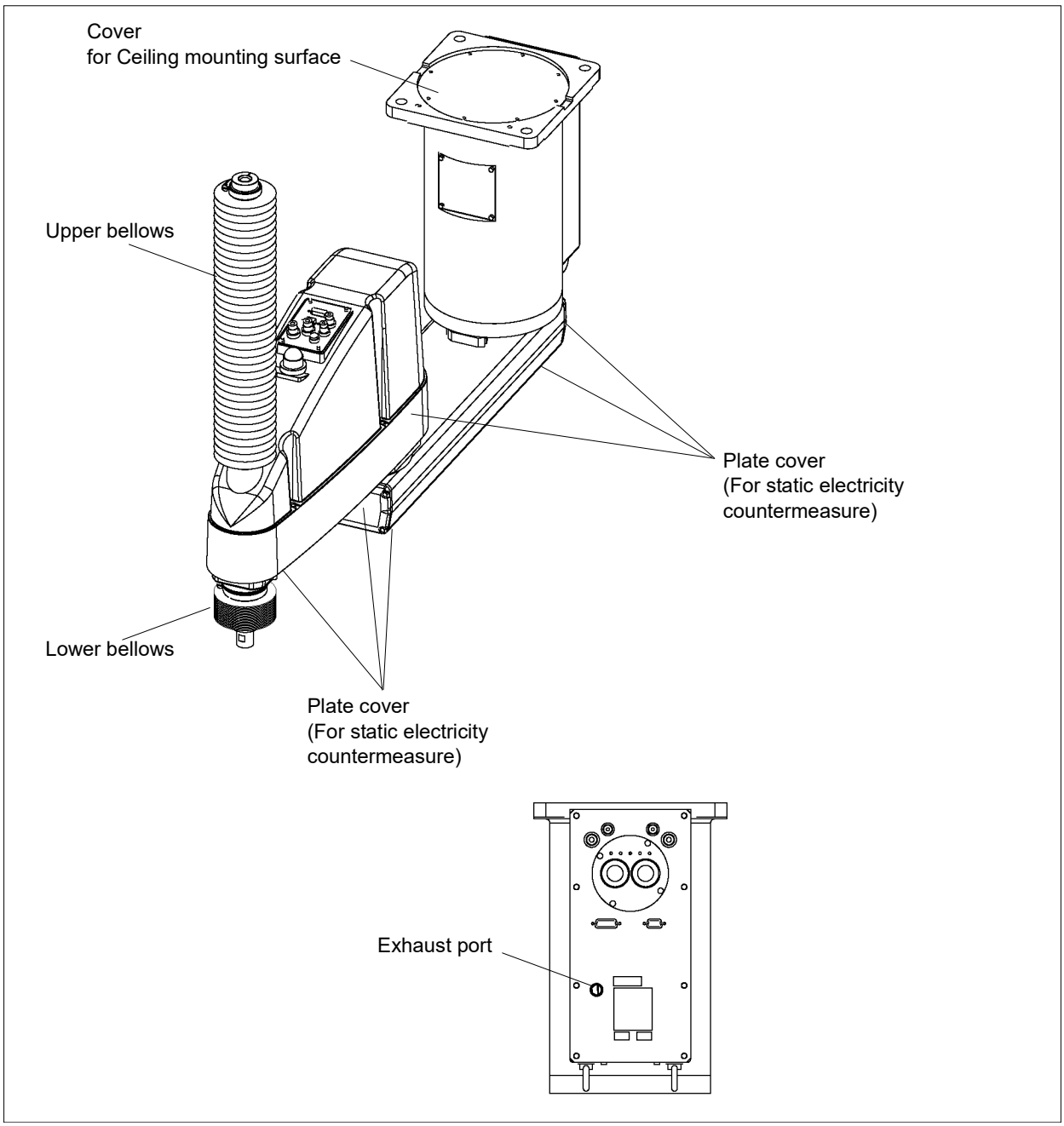

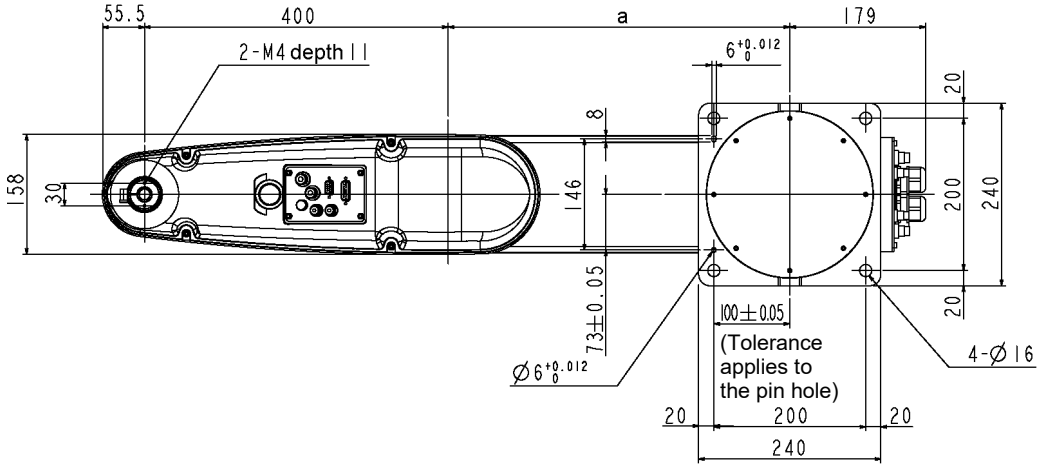

	G10-65*CR	G10/G20-85*CR	G20-A0*CR
a	250	450	600

	G10/G20-**1CR	G10/G20-**4CR
b	150	390
c	29.5	288.5
d	515	774

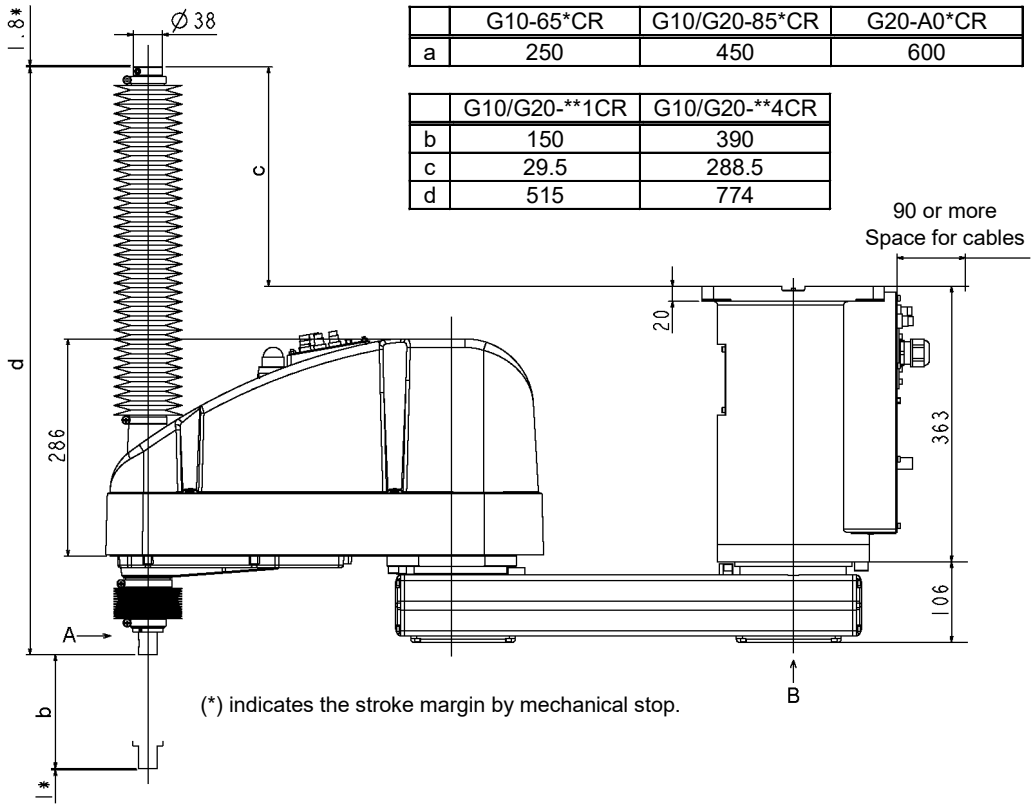

(*) indicates the stroke margin by mechanical stop.

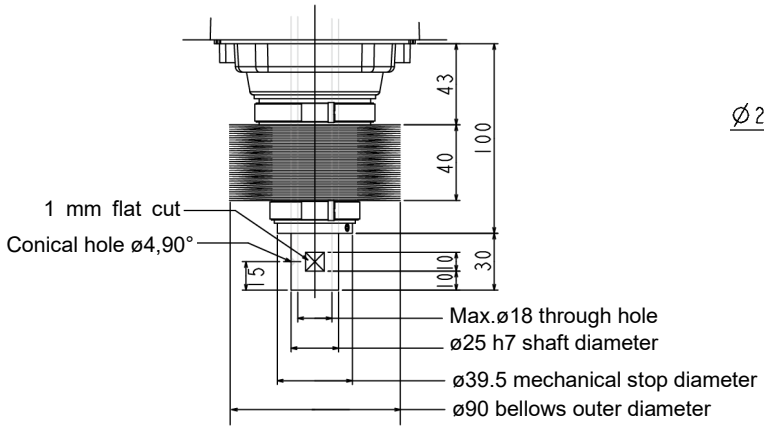

Detail of “A”
(Calibration point position of Joints #3 and #4)

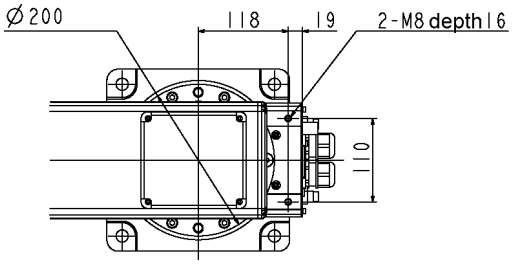

Detail of “B”

Protected-model G10/G20-***DR, PR

The following figure shows the additional parts and specifications for the Ceiling mounting Protected-model when compared with the Standard-model in appearance.
Normal G10/G20-***DR Manipulators do not have bellows. If necessary, select the bellows option at shipment. The following figure is a Manipulator with bellows option.
For dimensions of the end part of G10/G20-***DR without bellows option, refer to G10/G20***SR.

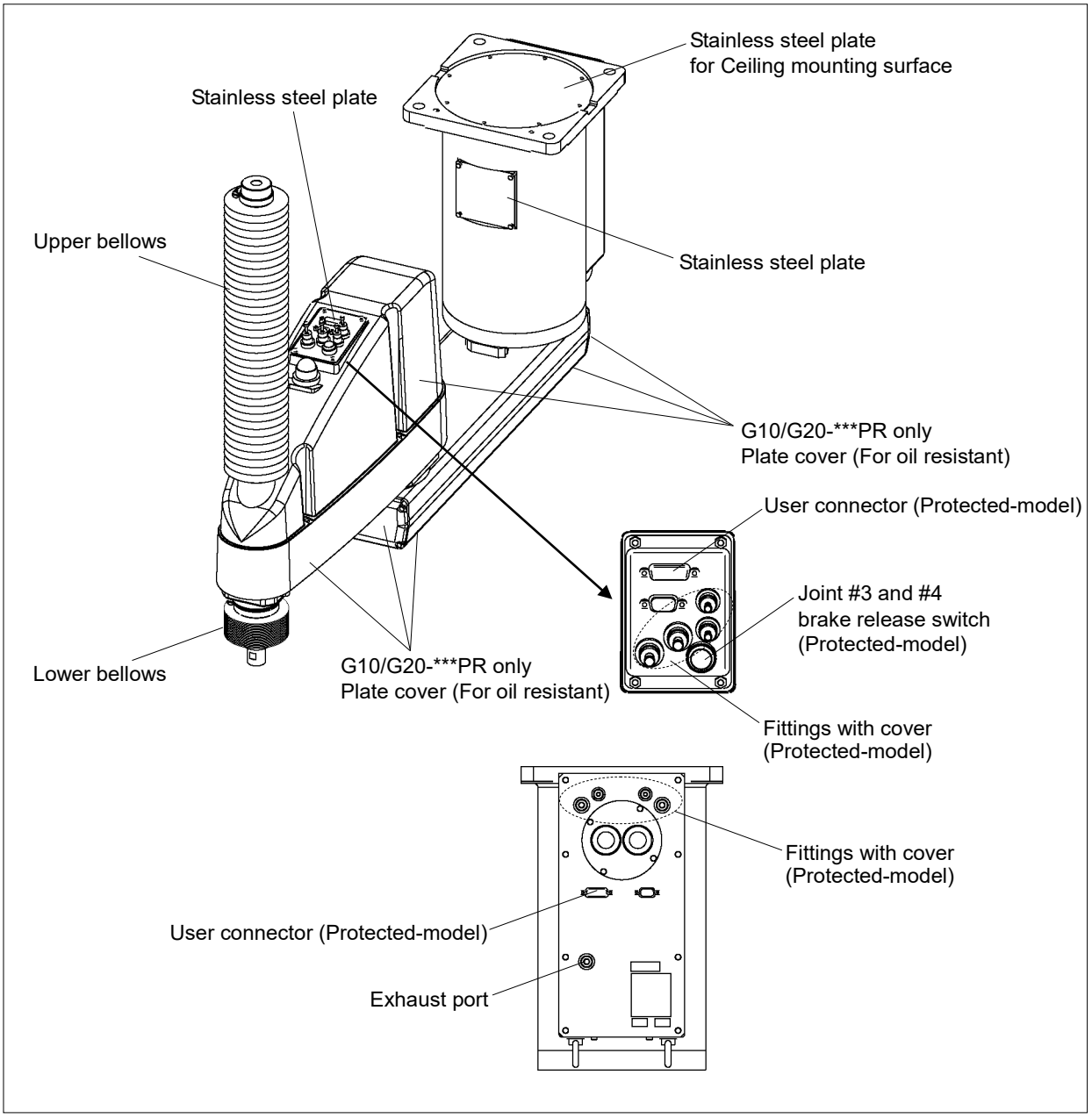

NOTE
- For Protected-model, all the screws used for outer parts are stainless steel screws. (Excluding the screw used for mechanical stop.)

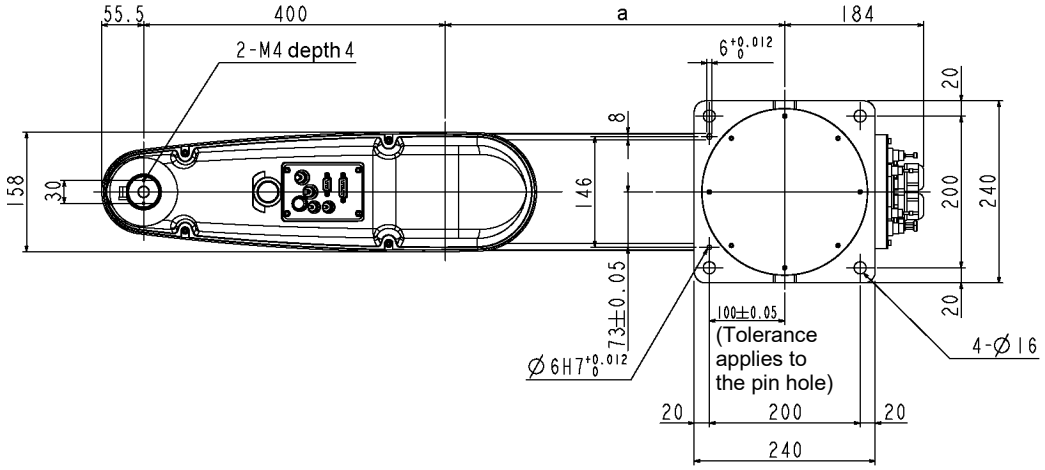

	G10-65*PR	G10/G20-85*PR	G20-A0*PR
a	250	450	600

	G10/G20-**1PR	G10/G20-**4PR
b	150	390
c	33	292
d	518.5	777.5

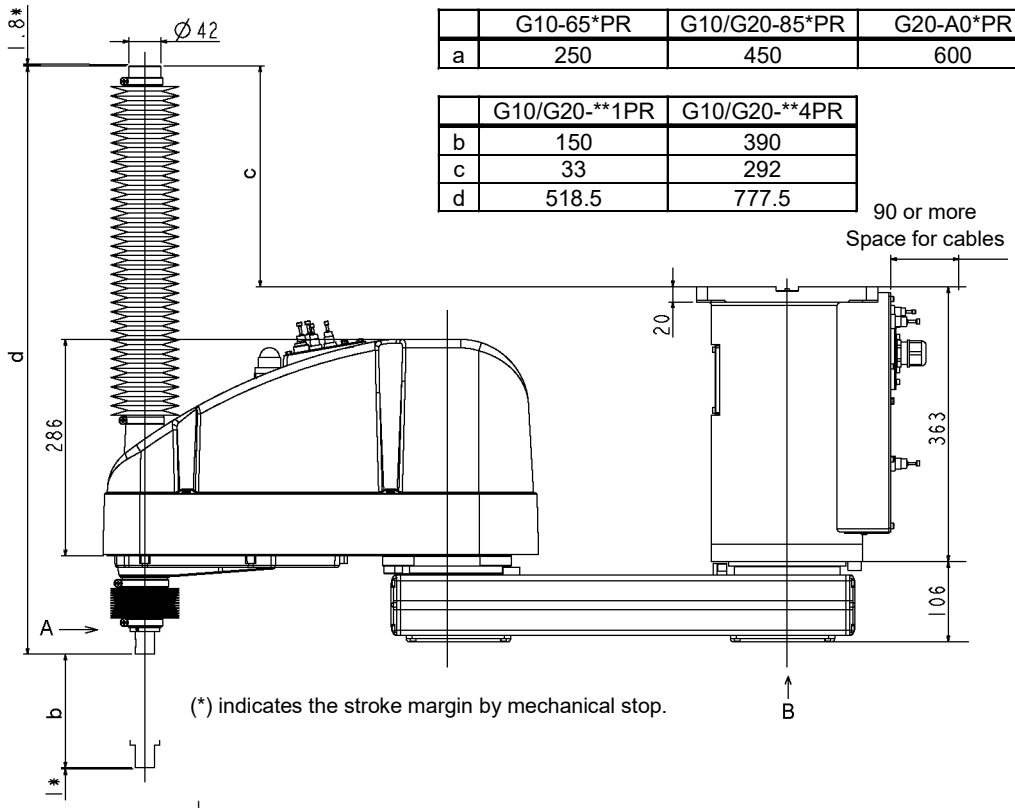

(*) indicates the stroke margin by mechanical stop.

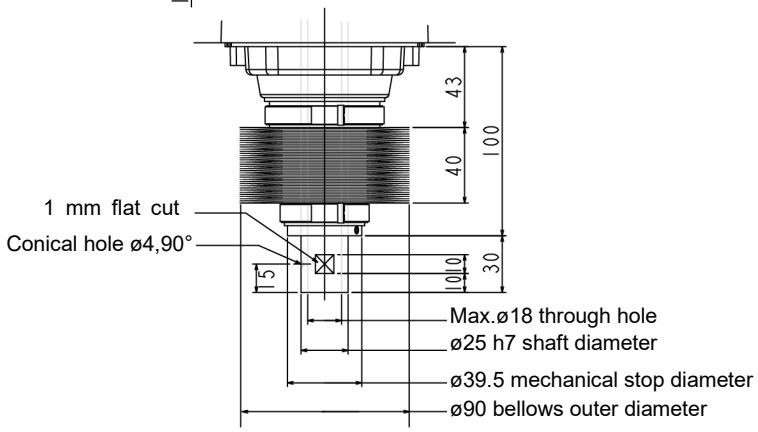

Detail of “A”
(Calibration point position of Joints #3 and #4)

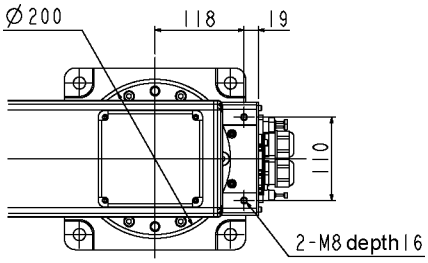

Detail of “B”

2.2.4 G10-65***, G10-85***: For S/N: 1**** or later

G10-65***, G10-85*** manipulator of S/N: 1**** or later is different from other models in its form. The additional screw holes processed on G10-85*** are not for the end effector or other equipments.

Standard model

G10-65*S*

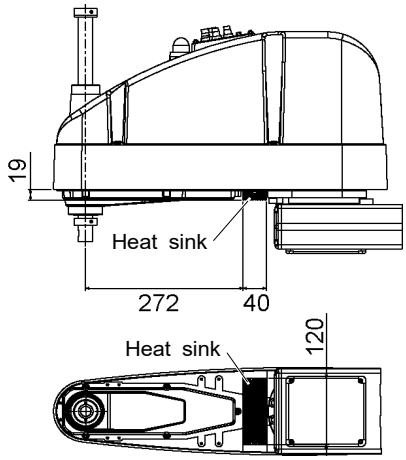

G10-85*S*

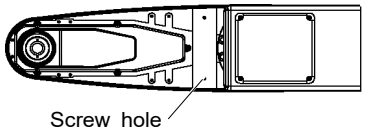

G20-85*S* (Same as before)

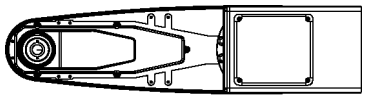

Cleanroom model

G10-65*C*

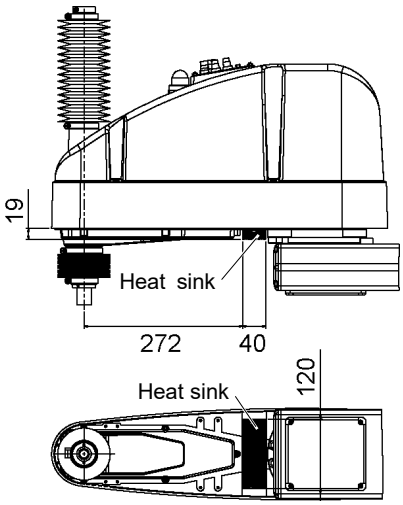

G10-85*C*

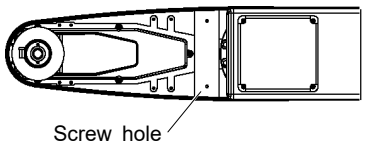

G20-85*C* (Same as before)

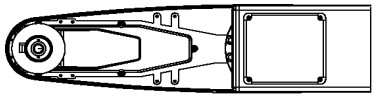

Protection model

G10-65*P*

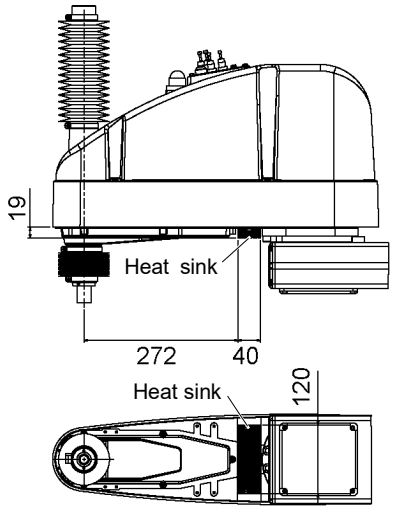

G10-85*P*

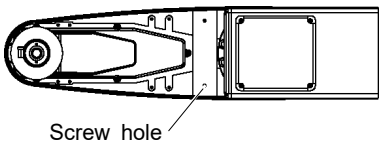

G20-85*P* (Same as before)

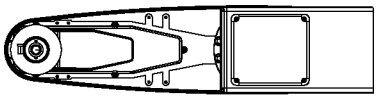

2.3 Specifications

For details of each manipulator specifications, refer to *Appendix A: Specifications.*

2.4 How to Set the Model

The Manipulator model for your system has been set before shipment from the factory. It is normally not required to change the model when you receive your system.

CAUTION	■ When you need to change the setting of the Manipulator model, be sure to set the Manipulator model properly. Improper setting of the Manipulator model may result in abnormal or no operation of the Manipulator and/or cause safety problems.

NOTE

If the custom specifications number (MT***) is described on MODEL of the signature label (S/N label), the Manipulator has custom specifications. (A label with only the custom specifications number may be attached depending on shipment time.)

The custom specifications may require a different configuration procedure; check the custom specifications number (MT***) and contact the supplier of your region when necessary.

The Manipulator model can be set from software.
Refer to the chapter *Robot Configuration* in the *EPSON RC+ User's Guide*.

3. Environments and Installation

Designing and installation of the Manipulators and robotic equipment shall be performed by personnel who has taken robot system training held by us and suppliers and should conform to all national and local codes.

3.1 Environmental Conditions

A suitable environment is necessary for the robot system to function properly and safely. Be sure to install the robot system in an environment that meets the following conditions:

Item	Conditions
Ambient temperature *1	5 to 40°C
Ambient relative humidity	10 to 80% (no condensation)
First transient burst noise	1 kV or less (Signal wire)
Electrostatic noise	4 kV or less
Altitude	1000 m or lower
Environment	- Install indoors. - Keep away from direct sunlight. - Keep away from dust, oily smoke, salinity, metal powder or other contaminants. - Keep away from flammable or corrosive solvents and gases. - Keep away from water. - Keep away from shocks or vibrations. - Keep away from sources of electric noise. - Keep away from explosive area - Keep away from a large quantity of radiation

NOTE

Manipulators are not suitable for operation in harsh environments such as painting areas, etc. When using Manipulators in inadequate environments that do not meet the above conditions, please contact the supplier of your region.

*1 The ambient temperature conditions are for the Manipulators only. For the Controller the Manipulators are connected to, refer to the Controller manual.

For the Protected-model Manipulator, be sure to install the robot system in an environment that also meets the following conditions:

When the product is used in a low temperature environment around the minimum temperature of the product specification, or when the product is suspended for a long time on holidays or at night, a collision detection error may occur due to the large resistance of the drive unit immediately after the start of operation. In such a case, it is recommended to warm up for about 10 minutes.

Item	Conditions
Environment	- Install indoors. - Keep away from direct sunlight. - Keep away from salinity or other contaminants. - Keep away from flammable or corrosive solvents (including water) *2 and gases. - Keep away from shock or vibration. - Keep away from sources of electric noise. - It can be used under conditions with dust, oily smoke, metal powder or other contaminants. *3 - Keep away from explosive area - Keep away from a large quantity of radiation

*2 The Manipulator body is mainly made of iron and aluminum. It is not rust-proofed. Do not use the Manipulator under conditions where the Manipulator can expose to water or any other corrosive liquid.

*3 Any contaminants that can deteriorate sealing performance of nitrile rubber oil sealing, O-rings, packing seals and liquid gasket should be avoided.

Special Environmental Conditions

The protective seals are attached on the Protected-model Manipulator to prevent dust, water, etc. from the outside. Follow the precautions in use environment described below:

The surface of the Manipulator has general oil resistance. However, if your requirements specify that the Manipulator must withstand certain kinds of oil, please contact the supplier of your region.

Rapid change in temperature and humidity can cause condensation inside the Manipulator.

If your requirements specify that the Manipulator handles food, please contact the supplier of your region. to check whether the Manipulator will damage the food or not.

The Manipulator cannot be used in corrosive environments where acid or alkaline is used. In a salty environment where the rust is likely to gather, the Manipulator is susceptible to rust.

The controller used with the Protected-model Manipulator does not have protection features for dusty, wet, or oily environment. The controller must be placed in an environment that meets the specified conditions.

WARNING	■ Use an earth leakage breaker on the AC power cable of the Controller to avoid electric shock and circuit breakdown caused by short circuit. Prepare the earth leakage breaker that pertains the Controller you are using. For details, refer to the Controller manual.

CAUTION	■ When cleaning the Manipulator, do not rub it strongly with alcohol or benzene. It may lose luster on the coated face.

3.2 Base Table

A base table for anchoring the Manipulator is not supplied. Please make or obtain the base table for your Manipulator. The shape and size of the base table differs depending on the use of the robot system. For your reference, we list some Manipulator table requirements here.

The base table must not only be able to bear the weight of the Manipulator but also be able to withstand the dynamic movement of the Manipulator when the Manipulator operates at maximum acceleration/deceleration. Ensure that there is enough strength on the base table by attaching reinforcing materials such as crossbeams.
The torque and reaction force produced by the movement of the Manipulator are as follows:

	G10	G20
Max. Reaction torque on the horizontal plate	1000 N·m	1000 N·m
Max. Horizontal reaction force	4500 N	7500 N
Max. Vertical reaction force	2000 N	2000 N

The threaded holes required for mounting the Manipulator base are M12. Use mounting bolts with specifications conforming to ISO898-1 property class: 10.9 or 12.9.
For dimensions, refer to *3.3 Mounting Dimensions*.

The plate for the Manipulator mounting face should be 20 mm thick or more and made of steel to reduce vibration. The surface roughness of the steel plate should be 25 μm or less.

The table must be secured on the floor or wall to prevent it from moving.

The Manipulator installation surface should have a flatness of 0.5 mm or less and an inclination of 0.5 ° or less. If the flatness of the installation surface is improper, the base may be damaged or the robot may not fully show its performance.

When using a leveler to adjust the height of the base table, use a screw with M16 diameter or more.

If you are passing cables through the holes on the base table, see the figures below.

[unit : mm]

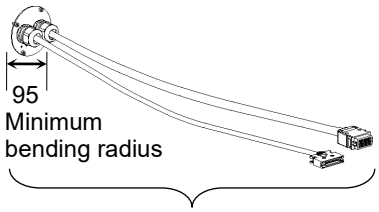

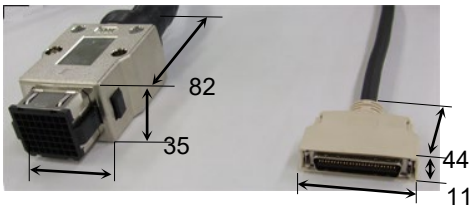

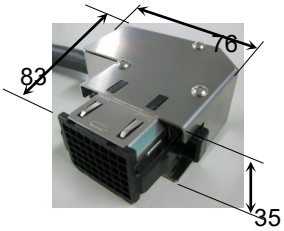

NOTE

Do not remove the M/C cables from the Manipulator.

For environmental conditions regarding space when placing the Controller on the base table, refer to the *Controller manual*.

WARNING	■ To ensure safety, a safeguard must be installed for the robot system. For details on the safeguard, refer to the *EPSON RC+ User's Guide*.

3.3 Mounting Dimensions

The maximum space described in figures shows that the radius of the end effector is 60 mm or less. If the radius of the end effector exceeds 60 mm, define the radius as the distance to the outer edge of maximum space.
If a camera or electromagnetic valve extends outside of the arm, set the maximum range including the space that they may reach.

Be sure to allow for the following extra spaces in addition to the space required for mounting the Manipulator, Controller, and peripheral equipment.

Space for teaching

Space for maintenance and inspection
(Ensure a space to open the rear side cover and the maintenance cover for maintenance.)

Space for cables

The minimum bend radius of the power cable is 90 mm. When installing the cable, be sure to maintain sufficient distance from obstacles. In addition, leave enough space for other cables so that they are not bent forcibly.

Ensure distance to the safeguard from the maximum motion range is more than 100 mm.

Table Top Mounting

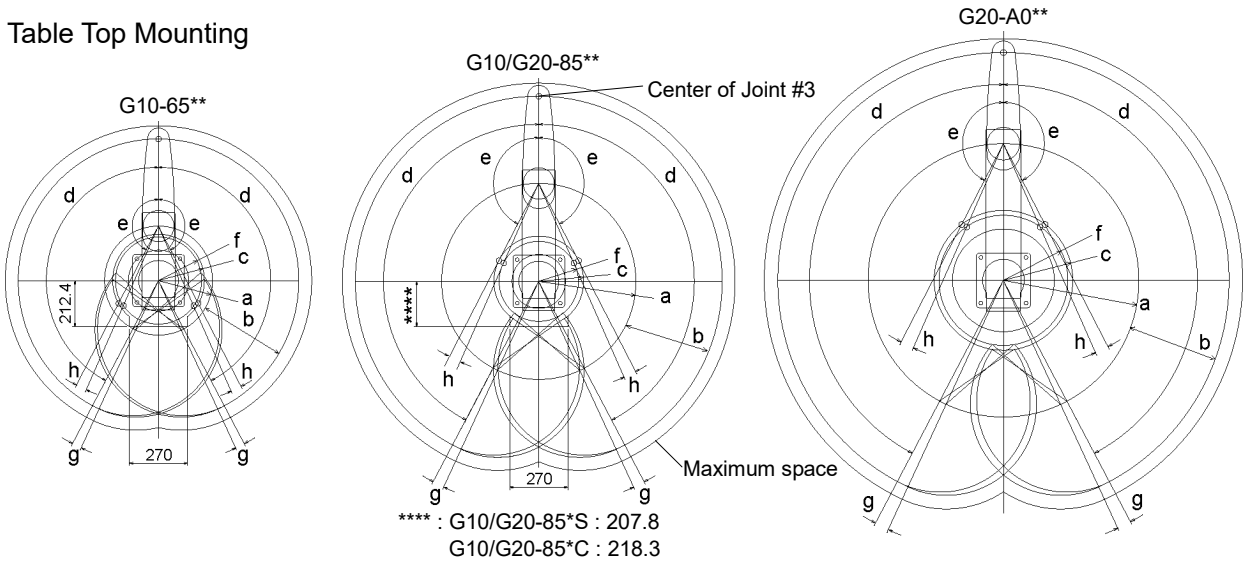

	G10-65**	G10/G20-85*			G20-A0**
		S, D	C, P, D bellows		
a Length of Arm #1 (mm)	250	450			600
b Length of Arm #2 (mm)	400	400			400
c (Motion range)	212.4	207.8	Z: 0 to –360	207.8	307
			Z: – 360 to –390	218.3	
d Motion range of Joint #1 (degree)	152	152			152
e Motion range of Joint #2 (degree)	152.5	152.5	Z: 0 to –360		152.5
			Z: –360 to –390		
f (Mechanical stop area)	199.4	183.3			285.4
g Joint #1 angle to hit mechanical stop (degree)	3	3			3
h Joint #2 angle to hit mechanical stop (degree)	3.5	3.5	Z: 0 to –360	3.5	3.5
			Z: –360 to –390	5	

The bellows for G10/G20-***DW are options at shipment.

NOTE ☞ In the range Z: –360 to –390 mm, the area is limited by interference of the Manipulator body and the arm.

Wall Mounting

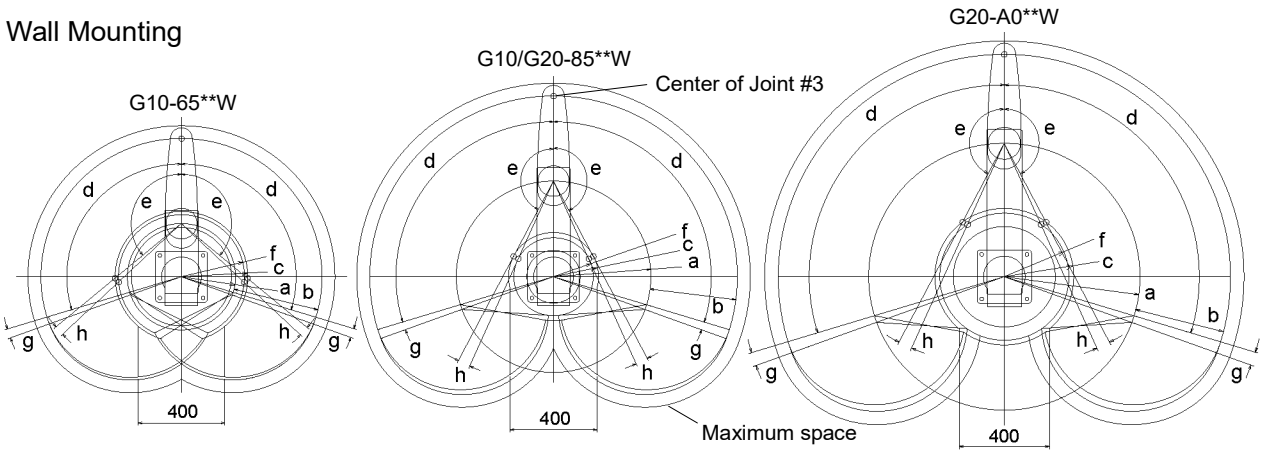

	G10-65**W	G10/G20-85*		G20-A0**W
		SW, DW	CW, PW, DW bellows	
a Length of Arm #1 (mm)	250	450		600
b Length of Arm #2 (mm)	400	400		400
c (Motion range)	306.5	207.8	218.3	307
d Motion range of Joint #1 (degree)	107	107		107
e Motion range of Joint #2 (degree)	130	152.5	151	152.5
f (Mechanical stop area)	291.2	183.3		285.4
g Joint #1 angle to hit mechanical stop (degree)	3	3		3
h Joint #2 angle to hit mechanical stop (degree)	3.5	3.5	5	3.5

The bellows for G10/G20-***DW are options at shipment.

Ceiling Mounting

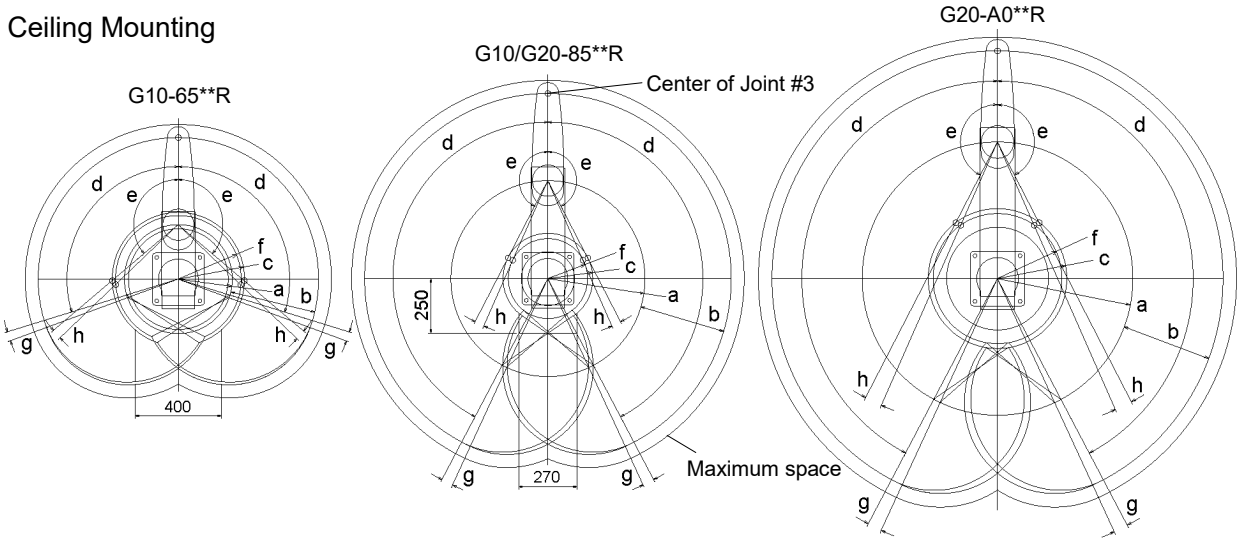

	G10-65**R	G10/G20-85*		G20-A0**R
		SR, DR	CR, PR, DR bellows	
a Length of Arm #1 (mm)	250	450		600
b Length of Arm #2 (mm)	400	400		400
c (Motion range)	306.5	207.8	218.3	307
d Motion range of Joint #1 (degree)	107	152		152
e Motion range of Joint #2 (degree)	130	152.5	151	152.5
f (Mechanical stop area)	291.2	183.3		285.4
g Joint #1 angle to hit mechanical stop (degree)	3	3		3
h Joint #2 angle to hit mechanical stop (degree)	3.5	3.5	5	3.5

The bellows for G10/G20-***DR are options at shipment.

3.4 Unpacking and Transportation

3.4.1 Precautions for Transportation

Transportation, and relocation shall be performed by personnel who has taken robot system training held by us and suppliers and should conform to all national and local codes.

WARNING	■ Only authorized personnel should perform sling work and operate a crane and a forklift. When these operations are performed by unauthorized personnel, it is extremely hazardous and may result in serious bodily injury and/or severe equipment damage to the robot system.

CAUTION

■ Using a cart or similar equipment, transport the Manipulator in the same manner as it was delivered.

■ After removing the bolts securing the Manipulator to the delivery equipment, the Manipulator can fall. Be careful not to get hands or fingers caught.

■ The arm is secured with a wire tie. Leave the wire tie secured until you finish the installation so as not to get hands or fingers caught.

■ To carry the Manipulator, secure the Manipulator to the delivery equipment, or pass belts through the eyebolts and hoist it with your hands. Make sure to hold the areas indicated in gray in the figure (bottom of Arm #1 and bottom of the base) by hand.

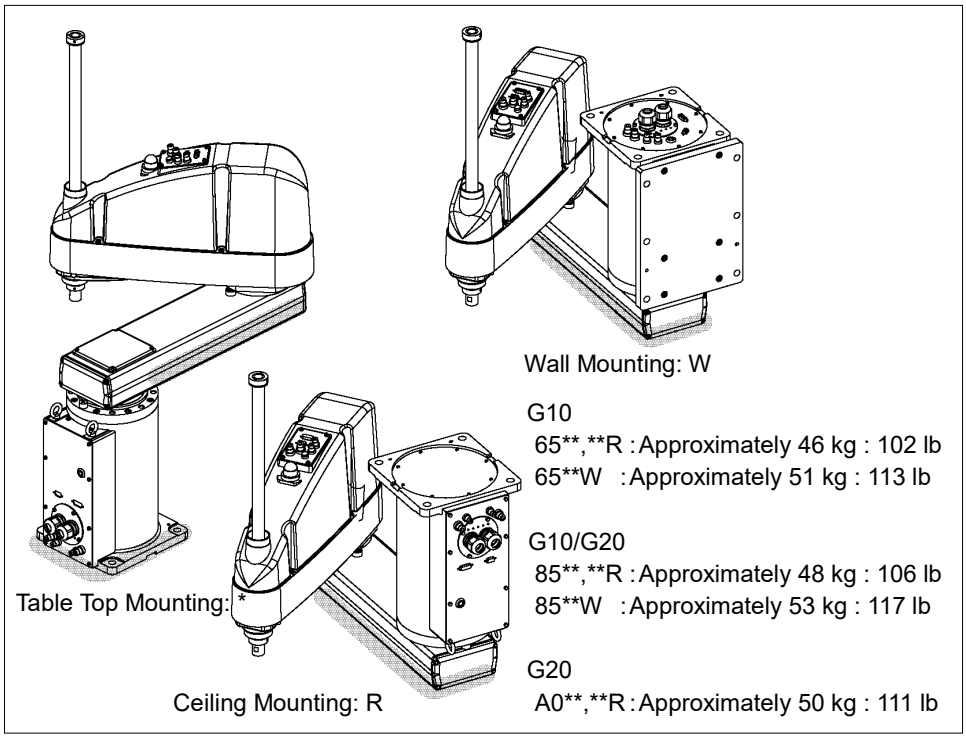

■ Be careful not to get hands or fingers caught when holding the bottom of the base by hand.

■ Stabilize the Manipulator with your hands when hoisting it.

■ When transporting the Manipulator for a long distance, secure it to the delivery equipment directly so that the Manipulator never falls.
If necessary, pack the Manipulator in the same style as it was delivered.

3.4.2 Transportation

Transport the Manipulator following the instructions below:

(1) Attach the eyebolts to the upper back side of the Arm.

(2) Pass the belts through the eyebolts.

(3) Hoist the Manipulator slightly so that it does not fall. Then, remove the bolts securing the Manipulator to the delivery equipment or pallet.

(4) Hoist the Manipulator holding it by hand so that it can keep its balance. Then, move it to the base table.

3.5 Installation

The installation shall be made by personnel who has taken robot system training held by us and suppliers and should conform to all national and local codes.

⚠ CAUTION	■ The robot system must be installed to avoid interference with buildings, structures, utilities, other machines and equipment that may create a trapping hazard or pinch points. ■ Vibration (resonance) may occur during operation depending on rigidity of the installation table. If the vibration occurs, improve rigidity of the table or change the speed or acceleration and deceleration settings.

The following sections describe the installation of the Standard Manipulator.

3.5.1 Table Top Mounting
3.5.2 Wall Mounting
3.5.3 Ceiling Mounting

When the Manipulator is a Cleanroom-model or Protected-model, refer to each section.

3.5.4 Cleanroom-model
3.5.5 Protected-model

3.5.1 Table Top Mounting

CAUTION	■ Install the Table Top Mounting Manipulator with four or more people. The Manipulator weights are as follows. Be careful not to get hands, fingers, or feet caught and/or have equipment damaged by a fall of the Manipulator. G10-65** : Approximately 46 kg :102 lb. G10/G20-85** : Approximately 48 kg :106 lb. G20-A0** : Approximately 50 kg :111 lb.

Standard Model

(1) Secure the base to the base table with four bolts.

NOTE Use bolts with specifications conforming to ISO898-1 Property Class: 10.9 or 12.9.

Tightening torque
: 73.5 N·m (750 kgf·cm)

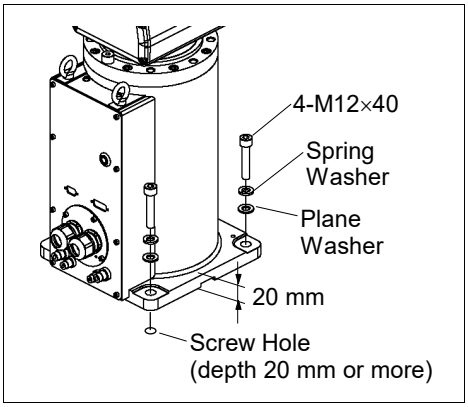

(2) Using nippers, cut off the wire tie binding the shaft and arm retaining bracket on the base.

(3) Remove the bolts securing the wire ties removed in step (2).

(4) Remove the fixing jig for transport.

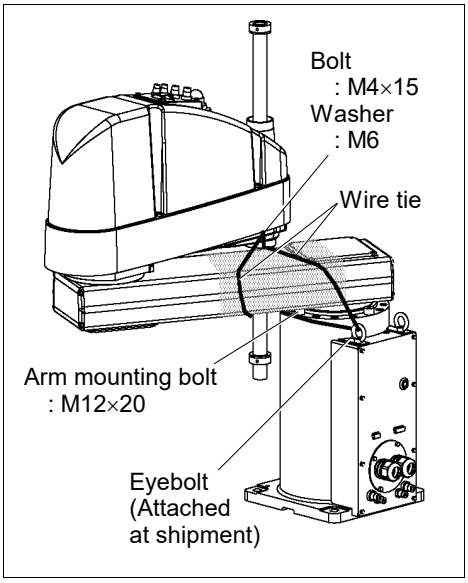

3.5.2 Wall Mounting

WARNING	■ Install the Wall Mounting Manipulator with four or more people. The Manipulator weights are as follows. Be careful not to get hands, fingers, or feet caught and/or have equipment damaged by a fall of the Manipulator. G10-65**W : Approximately 51 kg :113 lb. G10/G20-85**W : Approximately 53 kg :117 lb. G20-A0**W : Approximately 55 kg :122 lb. ■ When installing the Manipulator to the wall, support the Manipulator, and then secure the anchor bolts. Removing the support without securing the anchor bolts properly is extremely hazardous and may result in fall of the Manipulator.

Standard Model

(1) Unpack the manipulator with retaining the arm posture.

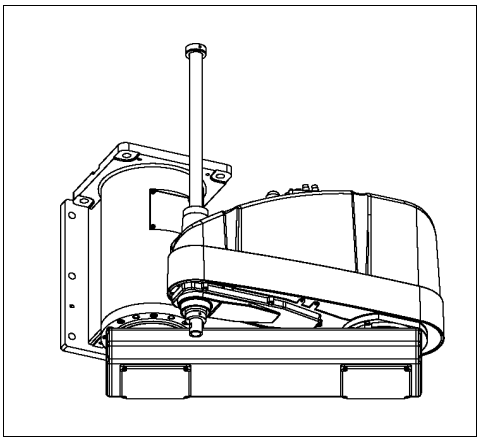

(2) Secure the base to the wall with six bolts.

NOTE Use bolts with specifications conforming to ISO898-1 Property Class: 10.9 or 12.9.

Tightening torque
: 32.0 N·m (326 kgf·cm)

(3) Remove the fixing jig for transport.

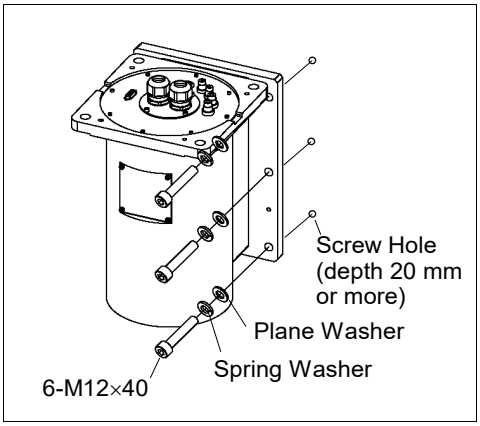

3.5.3 Ceiling Mounting

⚠ WARNING	■ Install the Ceiling Mounting Manipulator with four or more people. The Manipulator weights are as follows. Be careful not to get hands, fingers, or feet caught and/or have equipment damaged by a fall of the Manipulator. G10-65**R : Approximately 46 kg :102 lb. G10/G20-85**R : Approximately 48 kg :106 lb. G20-A0**R : Approximately 50 kg :111 lb. ■ When installing the Manipulator to the ceiling, support the Manipulator, and then secure the anchor bolts. Removing the support without securing the anchor bolts properly is extremely hazardous and may result in fall of the Manipulator.

Standard Model

(1) Unpack the manipulator with retaining the arm posture.

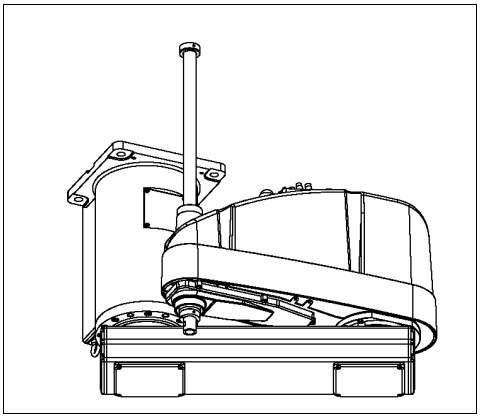

(2) Secure the base to the ceiling with four bolts.

NOTE ☞ Use bolts with specifications conforming to ISO898-1 Property Class: 10.9 or 12.9.

Tightening torque
: 32.0 N·m (326 kgf·cm)

(3) Remove the fixing jig for transport.

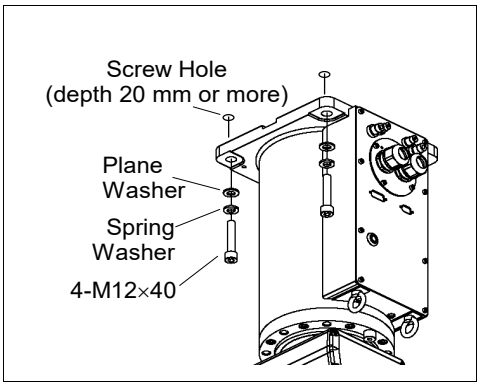

3.5.4 Cleanroom-model

(1) Unpack the Manipulator outside of the clean room.

(2) Secure the Manipulator to delivery equipment such as a pallet with bolts so that the Manipulator does not fall over.

(3) Wipe off the dust on the Manipulator with a little alcohol or distilled water on a lint-free cloth.

(4) Transport the Manipulator into the clean room.

(5) Refer to the installation procedure of each Manipulator model and install the Manipulator.

(6) Connect an exhaust tube to the exhaust port.

3.5.5 Protected-model

Refer to the installation procedure of each Manipulator model and install the Manipulator. When the Manipulator is a Protected-model, be aware of the followings.

WARNING	■ Connect the power cable connection and the signal cable connector to the Manipulator immediately after the Manipulator installation. The Manipulator without connecting them may result in electric shock and/or malfunction of the robot system as it cannot ensure IP54 / IP65.

CAUTION	■ When operating the Manipulator under special environmental conditions (adverse conditions with dust and oily smoke), do not place the controller in the same condition since the controller does not comply with IP54 / IP65. Doing so may cause equipment damage to and/or malfunction of the controller.

3.6 Connecting the Cables

WARNING	■ To shut off power to the robot system, disconnect the power plug from the power source. Be sure to connect the AC power cable to a power receptacle. DO NOT connect it directly to a factory power source. ■ Before performing any replacement procedure, turn OFF the Controller and related equipment, and then disconnect the power plug from the power source. Performing any replacement procedure with the power ON is extremely hazardous and may result in electric shock and/or malfunction of the robot system. ■ Be sure to connect the cables properly. Do not allow unnecessary strain on the cables. (Do not put heavy objects on the cables. Do not bend or pull the cables forcibly.) The unnecessary strain on the cables may result in damage to the cables, disconnection, and/or contact failure. Damaged cables, disconnection, or contact failure is extremely hazardous and may result in electric shock and/or improper function of the robot system. ■ Grounding the manipulator is done by connecting with the controller. Ensure that the controller is grounded and the cables are correctly connected. If the ground wire is improperly connected to ground, it may result in the fire or electric shock.

CAUTION	■ When connecting the Manipulator to the Controller, make sure that the serial numbers on each equipment match. Improper connection between the Manipulator and Controller may not only cause improper function of the robot system but also serious safety problems. The connection method varies with the Controller used. For details on the connection, refer to the *Controller manual*. If the G series Manipulator is connected to the Controller for the 6-axis robot, it may result in malfunction of the Manipulator.

When the Manipulator is a Cleanroom-model, be aware of the followings.

When the Manipulator is a Cleanroom-model, use it with an exhaust system. For details, refer to *Appendix A: Specifications.*

When the Manipulator is a Protected-model, be aware of the followings.

WARNING	■ Connect the power cable connection and the signal cable connector to the Manipulator immediately after the Manipulator installation. The Manipulator without connecting them may result in electric shock and/or malfunction of the robot system as it cannot ensure IP54, IP65.

CAUTION	■ When operating the Manipulator under special environmental conditions (adverse conditions with dust and oily smoke), do not place the controller in the same condition since the controller does not comply with IP54, IP65. Doing so may cause equipment damage to and/or malfunction of the controller.

Cable Connections

Connect the power connector and signal connector of the M/C cables to the Controller.

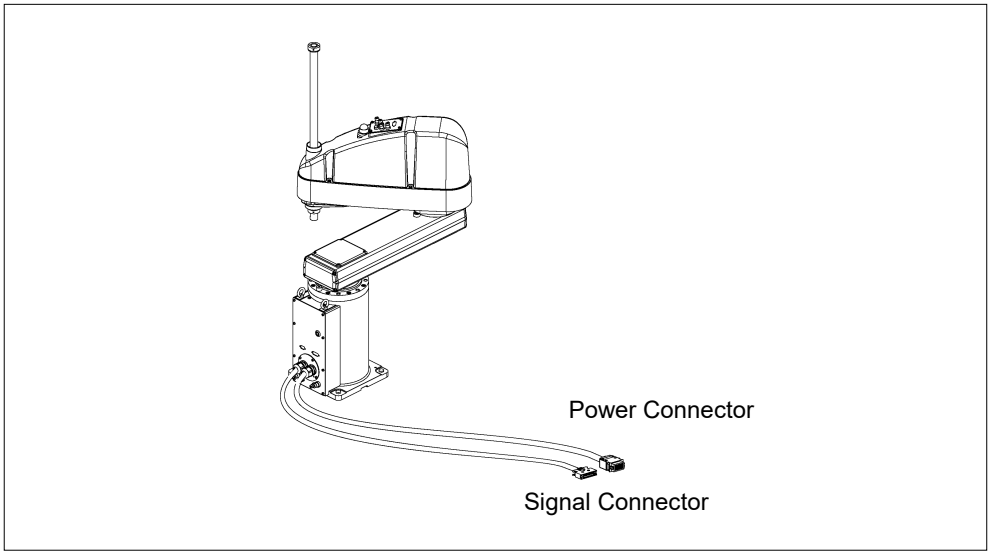

3.7 User Wires and Pneumatic Tubes

CAUTION	■ Only authorized or certified personnel should be allowed to perform wiring. Wiring by unauthorized or uncertified personnel may result in bodily injury and/or malfunction of the robot system.

User electrical wires and pneumatic tubes are contained in the cable unit.

Electrical Wires

Rated Voltage	Allowable Current	Wires	Nominal Sectional Area	Outer Diameter	Note
AC/DC30 V	1 A	24	0.211 mm^2	ø8.3±0.3 mm	Shielded

		Maker	Standard	
15 pin	Suitable Connector	JAE	DA-15PF-N	(Solder type)
	Clamp Hood	JAE	DA-C8-J10-F2-1R	(Connector setscrew: #4-40 NC)
9 pin	Suitable Connector	JAE	DE9PF-N	(Solder type)
	Clamp Hood	JAE	DE-C8-J9-F2-1R	(Connector setscrew: #4-40 NC)

Pins with the same number, indicated on the connectors on both ends of the cables, are connected.

Pneumatic Tubes

Max. Usable Pneumatic Pressure	Pneumatic Tubes	Outer Diameter × Inner Diameter
0.59 MPa (6 kgf/cm^2 : 86 psi)	2	ø6 mm × ø4 mm
	2	ø4 mm × ø2.5 mm

Fittings for ø6 mm and ø4 mm (outer diameter) pneumatic tubes are supplied on both ends of the pneumatic tubes.

When the Manipulator is a Protected-model, be aware of the followings.

CAUTION	■ Be sure to use IP54 or IP65 compliant wires and tubes when using the Manipulator under special environmental conditions (adverse condition with dust and oily smoke). Using unprotected wires and tubes may cause equipment damage to and/or malfunction of the Manipulator as proper operation of the Manipulator under the conditions is no more guaranteed. ■ Be sure to attach the cap on the user cable connector when not using the connector. Using the Manipulator without the cap may cause equipment damage to and/or malfunction of the Manipulator as dust or oily smoke gets into the connector.

Common Parts

* Color differs depending on the shipment time

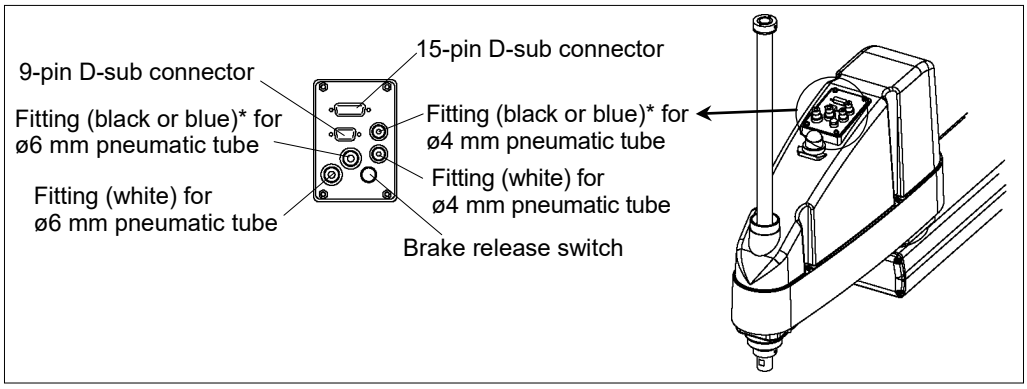

Table Top Mounting

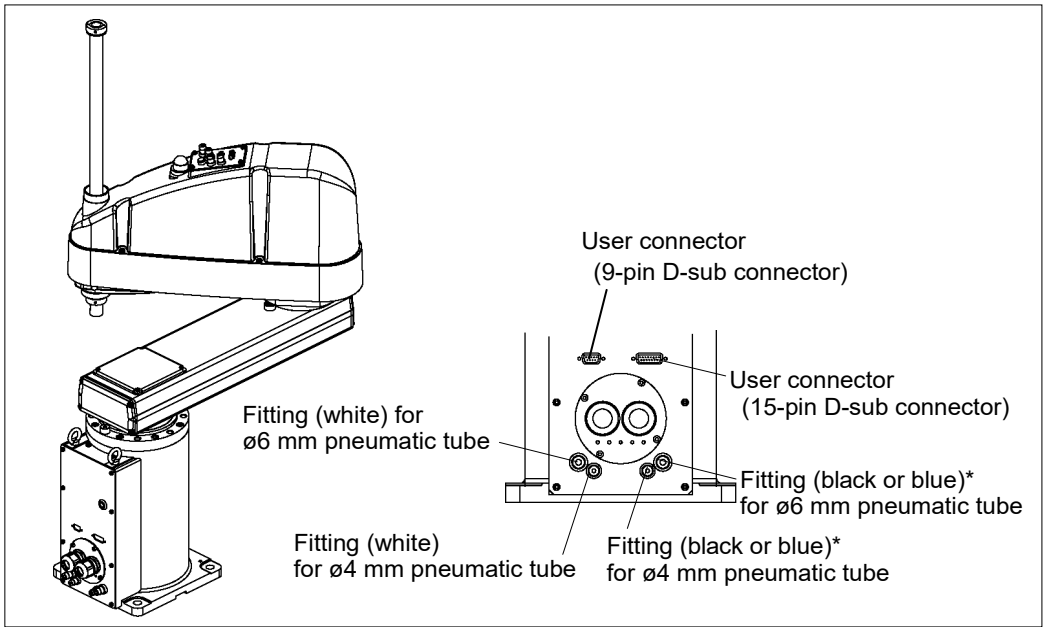

Wall Mounting

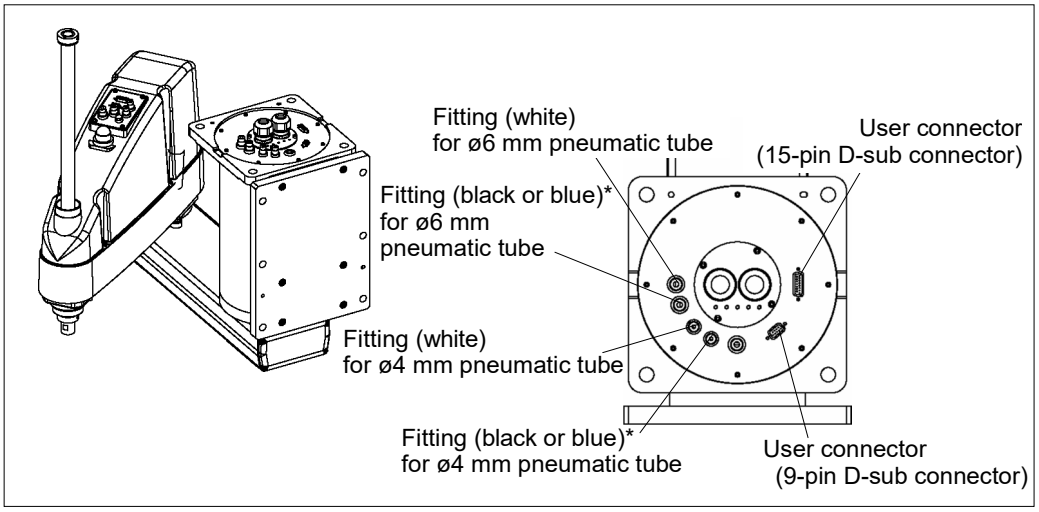

Ceiling Mounting

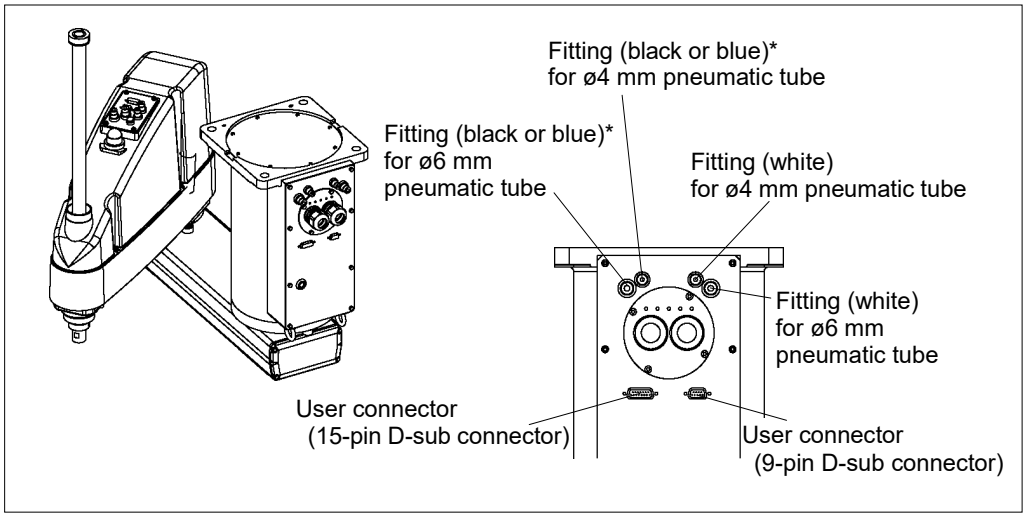

3.8 Relocation and Storage

3.8.1 Precautions for Relocation and Storage

Observe the following when relocating, storing, and transporting the Manipulators.

The installation shall be made by personnel who has taken robot system training held by us and suppliers and should conform to all national and local codes.

WARNING	■ Only authorized personnel should perform sling work and operate a crane and a forklift. When these operations are performed by unauthorized personnel, it is extremely hazardous and may result in serious bodily injury and/or severe equipment damage to the robot system.

CAUTION	■ Before relocating the Manipulator, fold the arm and secure it tightly with a wire tie to prevent hands or fingers from being caught in the Manipulator. ■ When removing the anchor bolts, support the Manipulator to prevent falling. Removing the anchor bolts without support may result in a fall of the Manipulator, and then get hands, fingers, or feet caught. ■ To carry the Manipulator, have four or more people to work on it and secure the Manipulator to the delivery equipment or hold the bottom of Arm #1 and the bottom of the base by hand. When holding the bottom of the base by hand, be very careful not to get hands or fingers caught. ■ Stabilize the Manipulator with your hands when hoisting it. Unstable hoisting is extremely hazardous and may result in fall of the Manipulator.

When transporting the Manipulator for a long distance, secure it to the delivery equipment so that the Manipulator cannot fall.
If necessary, pack the Manipulator in the same way as it was delivered.

When the Manipulator is used for a robot system again after long-term storage, perform a test run to verify that it works properly, and then operate it thoroughly.

Transport and store the Manipulator in the range of Temperature: -20 to +60°C, Humidity: 10 to 90% (no condensation).

When condensation occurs on the Manipulator during transport or storage, turn ON the power only after the condensation dries.

Do not shock or shake the Manipulator during transport.

3.8.2 Table Top Mounting

CAUTION	■ Install or relocate the Table Top Mounting Manipulator with four or more people. The Manipulator weights are as follows. Be careful not to get hands, fingers, or feet caught and/or have equipment damaged by a fall of the Manipulator. G10-65** : Approximately 46 kg :102 lb. G10/G20-85** : Approximately 48 kg :106 lb. G20-A0** : Approximately 50 kg :111 lb.

(1) Turn OFF the power on all devices and unplug the cables.

NOTE

Remove the mechanical stops if using them to limit the motion range of Joints #1 and #2.

For details on the motion range, refer to *5.2 Motion Range Setting by Mechanical Stops*.

(2) Attach the eyebolts on the upper back side of Arm #1.

(3) Tie the lower end of the shaft and arm, and the base and arm together with a wire tie. Be careful not to tie them too tight. Otherwise, the shaft may bend.

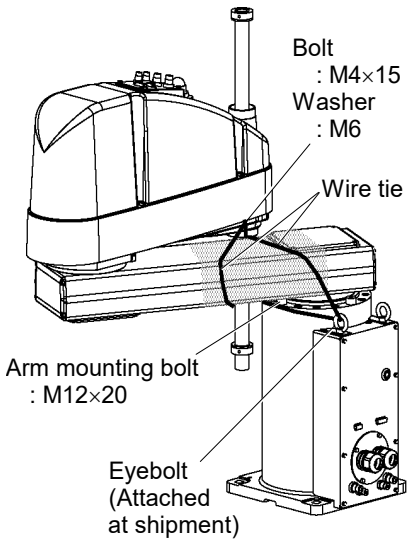

(4) Pass the belts through the eyebolts.

(5) Hoist the Manipulator slightly so that it does not fall. Remove four bolts securing the Manipulator.

(6) Hoist the Manipulator holding it by hand so that it can keep its balance. Then, move the Manipulator to the delivery equipment or another location and anchor it.

NOTE

Stretch the belts tight until you finish anchoring the Manipulator.

G10-65**

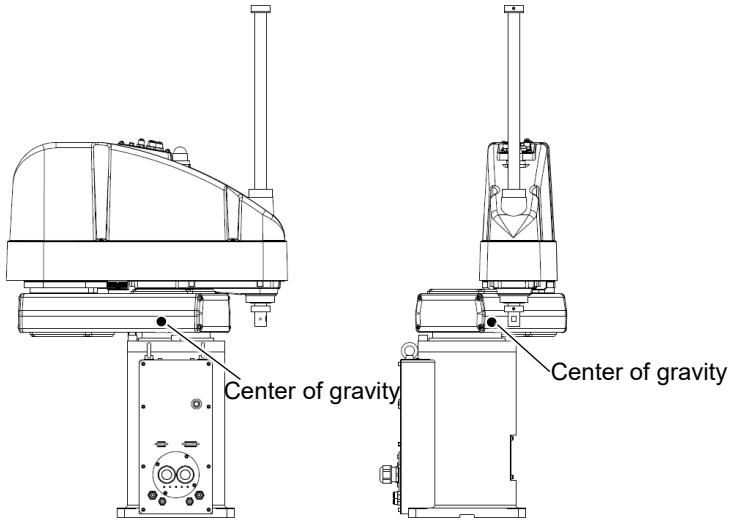

G10/G20-85**

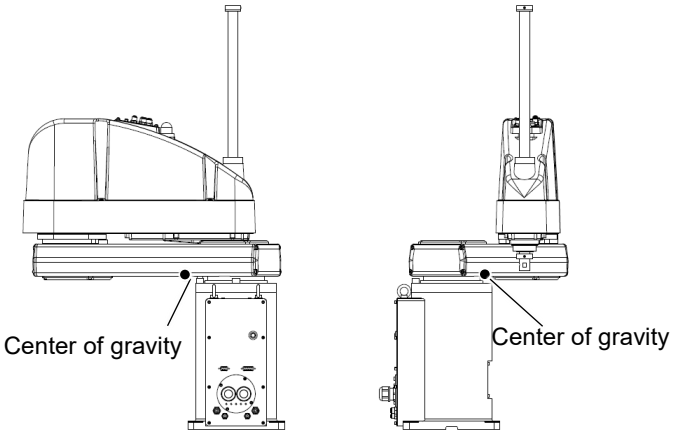

G20-A0**

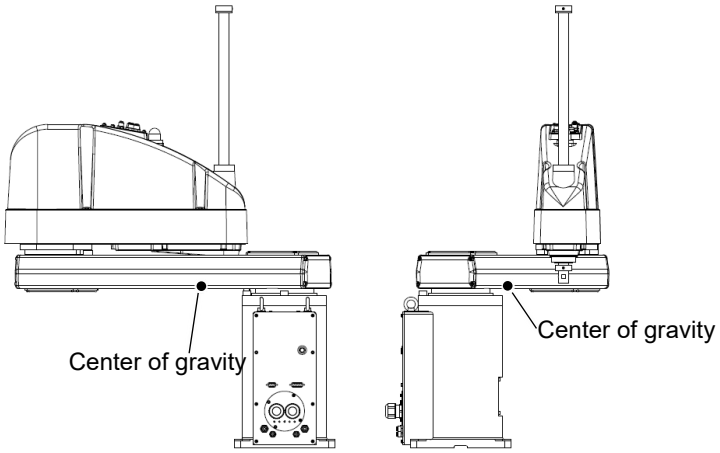

3.8.3 Wall Mounting

⚠ WARNING	■ Install or relocate the Wall Mounting Manipulator with four or more people. The Manipulator weights are as follows. Be careful not to get hands, fingers, or feet caught and/or have equipment damaged by a fall of the Manipulator. G10-65**W : Approximately 51 kg :113 lb. G10/G20-85**W : Approximately 53 kg :117 lb. G20-A0**W : Approximately 55 kg :122 lb. ■ When removing the Manipulator from the wall, support the Manipulator, and then remove the anchor bolts. Removing the anchor bolts without supporting is extremely hazardous and may result in fall of the Manipulator.

(1) Turn OFF the power on all devices and unplug the cables.
Remove the mechanical stops if using them to limit the motion range of Joints #1 and #2.

NOTE For details on the motion range, refer to *5.2 Motion Range Setting by Mechanical Stops*.

(2) Cover the arm with a sheet so that the arm will not be damaged.
Refer to the figure below and bind the shaft and arm retaining bracket on the base.

Example of Arm Retaining Posture

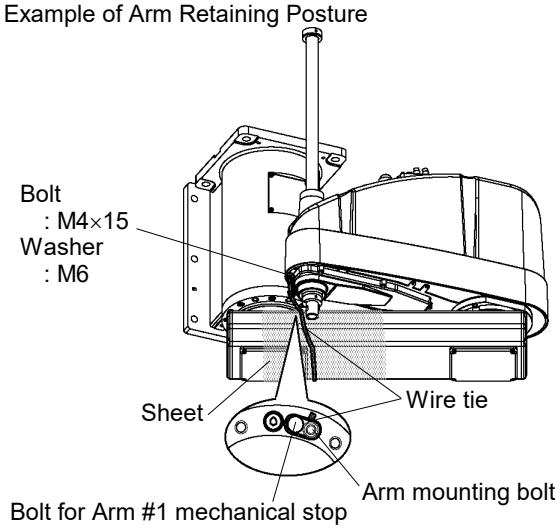

(3) Hold the bottom of Arm #1 by hand to unscrew the anchor bolts. Then, remove the Manipulator from the wall.

G10-65**W

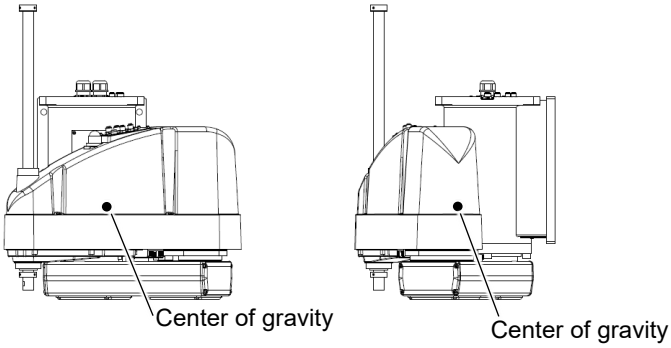

G10/G20-85**W

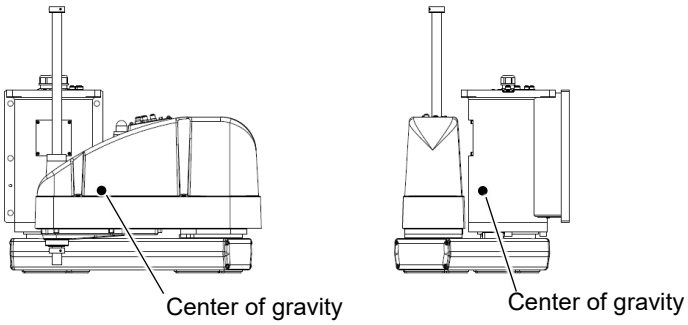

G20-A0**W

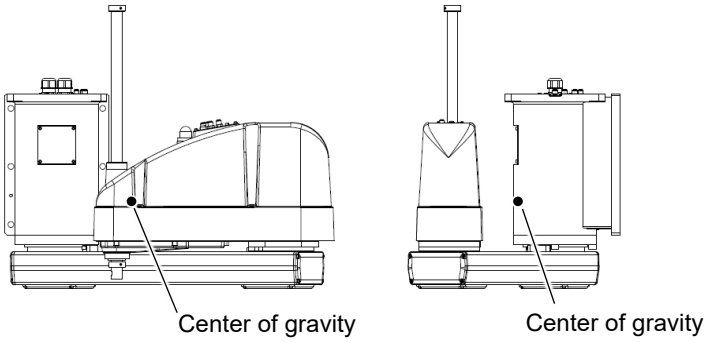

3.8.4 Ceiling Mounting

WARNING	■ Install or relocate the Ceiling Mounting Manipulator with four or more people. The Manipulator weights are as follows. Be careful not to get hands, fingers, or feet caught and/or have equipment damaged by a fall of the Manipulator. G10-65**R : Approximately 46 kg :102 lb. G10/G20-85**R : Approximately 48 kg :106 lb. G20-A0**R : Approximately 50 kg :111 lb. ■ When removing the Manipulator from the ceiling, support the Manipulator, and then remove the anchor bolts. Removing the anchor bolts without supporting is extremely hazardous and may result in fall of the Manipulator.

(1) Turn OFF the power on all devices and unplug the cables.

NOTE Remove the mechanical stops if using them to limit the motion range of Joints #1 and #2. For details on the motion range, refer to *5.2 Motion Range Setting by Mechanical Stops*.

(2) Cover the arm with a sheet so that the arm will not be damaged.
Refer to the figure below and bind the shaft and arm retaining bracket on the base.

Example of Arm Retaining Posture

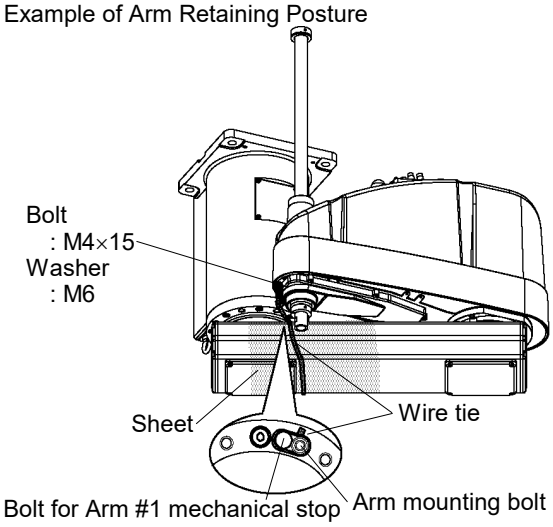

(3) Hold the bottom of Arm #1 by hand to unscrew the anchor bolts. Then, remove the Manipulator from the ceiling.

G10-65**R

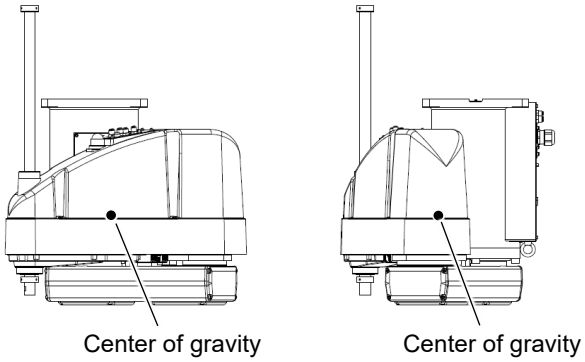

G10/G20-85**R

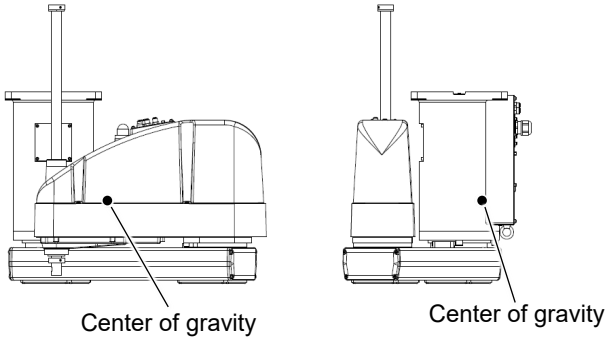

G20-A0**R

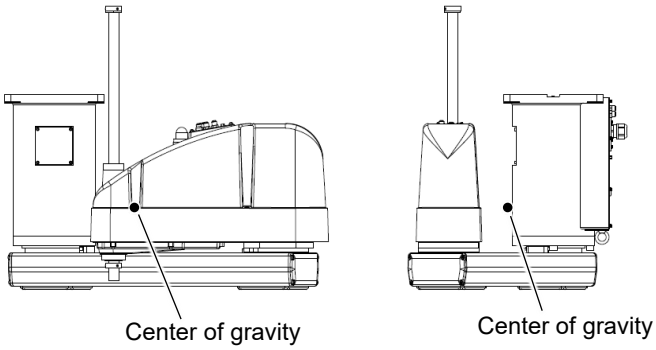

4. Setting of End Effectors

4.1 Attaching an End Effector

Users are responsible for making their own end effector(s). Before attaching an end effector, observe these guidelines. For details of attaching an end effector, *Hand Function Manual.*

CAUTION	■ If you use an end effector equipped with a gripper or chuck, connect wires and/or pneumatic tubes properly so that the gripper does not release the work piece when the power to the robot system is turned OFF. Improper connection of the wires and/or pneumatic tubes may damage the robot system and/or work piece as the work piece is released when the Emergency Stop switch is pressed. I/O outputs are configured at the factory so that they are automatically shut off (0) by power disconnection, the Emergency Stop switch, or the safety features of the robot system. However, the I/O set in the hand function does not turn off (0) when the Reset command is executed or in emergency stop.

Shaft

- Attach an end effector to the lower end of the shaft.
  For the shaft dimensions, and the overall dimensions of the Manipulator, refer to *2. Specifications*.
- Do not move the upper limit mechanical stop on the lower side of the shaft. Otherwise, when "Jump motion" is performed, the upper limit mechanical stop may hit the Manipulator, and the robot system may not function properly.
- Use a split muff coupling with an M4 bolt or larger to attach the end effector to the shaft.

Brake release switch

- Joints #3 and #4 cannot be moved up/down by hand because the electromagnetic brake is applied to the joints while power to the robot system is turned OFF. This prevents the shaft from hitting peripheral equipment and rotating in the case that the shaft is lowered by the weight of the end effector when the power is disconnected during operation, or when the motor is turned OFF even though the power is turned ON.

  To move Joint #3 up/down or rotate Joint #4 while attaching an end effector, turn ON the Controller and move the joint up/down or rotate the joint while pressing the brake release switch.
  This button switch is a momentary-type; the brake is released only while the button switch is being pressed.

  The respective brakes for Joints #3 and #4 are released simultaneously.

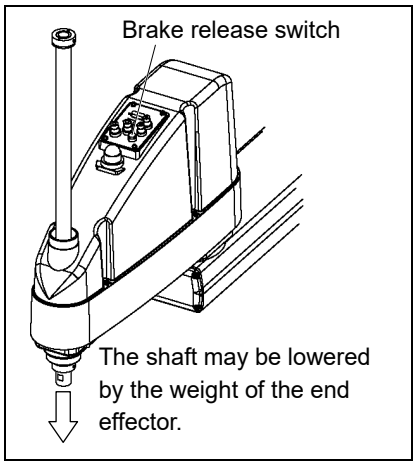

- Be careful of the shaft falling and rotating while the brake release switch is being pressed because the shaft may be lowered by the weight of the end effector.

Layouts

- When you operate the manipulator with an end effector, the end effector may interfere with the Manipulator because of the outer diameter of the end effector, the size of the work piece, or the position of the arms. When designing your system layout, pay attention to the interference area of the end effector.

4.2 Attaching Cameras and Valves

Arm #2 has threaded holes as shown in the figure below. Use these holes for attaching cameras, valves, and other equipment.

[Unit: mm]

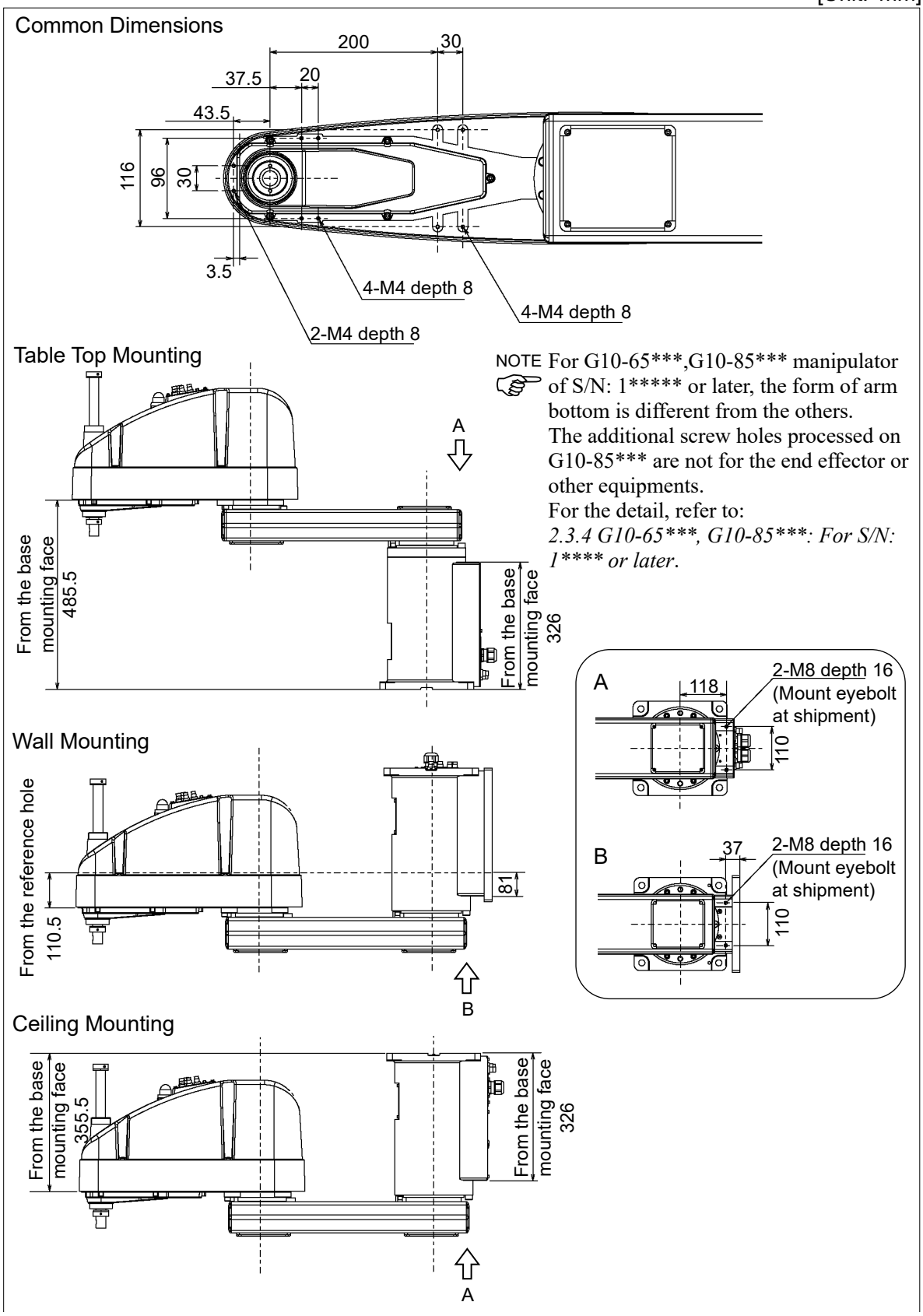

NOTE For G10-65***,G10-85*** manipulator of S/N: 1***** or later, the form of arm bottom is different from the others.
The additional screw holes processed on G10-85*** are not for the end effector or other equipments.
For the detail, refer to:
*2.3.4 G10-65***, G10-85***: For S/N: 1**** or later.*

4.3 Weight and Inertia Settings

To ensure optimum Manipulator performance, it is important to make sure that the load (weight of the end effector and work piece) and moment of inertia of the load are within the maximum rating for the Manipulator, and that Joint #4 does not become eccentric.
If the load or moment of inertia exceeds the rating or if the load becomes eccentric, follow the steps below, *4.3.1Weight Setting* and *4.3.2 Inertia Setting* to set parameters.
Setting parameters makes the PTP motion of the Manipulator optimal, reduces vibration to shorten the operating time, and improves the capacity for larger loads. In addition, it reduces persistent vibration produced when the moment of inertia of the end effector and work piece is larger than the default setting.

4.3.1 Weight Setting

CAUTION	■ G10 series The total weight of the end effector and the work piece must not exceed 10 kg. The G10 series Manipulators are not designed to work with loads exceeding 10 kg. G20 series The total weight of the end effector and the work piece must not exceed 20 kg. The G20 series Manipulators are not designed to work with loads exceeding 20 kg. Always set the Weight parameters according to the load. Setting a value that is smaller than the actual load may cause errors, excessive shock, insufficient function of the Manipulator, and/or shorten the life cycle of parts/mechanisms.

The acceptable weight capacity (end effector and work piece) in G10 series and G20 series Manipulators are as follows.

	Rated	Max.
G10 series	5 kg	10 kg
G20 series	10 kg	20 kg

When the load (weight of the end effector and work piece) exceeds the rating, change the setting of Weight parameter.
After the setting is changed, the maximum acceleration/deceleration speed of the robot system at PTP motion corresponding to the “Weight Parameter” is set automatically.

Load on the Shaft

The load (weight of the end effector and work piece) on the shaft can be set by Weight parameter.

EPSON RC+

Enter a value into the [Weight:] text box on the [Weight] panel ([Tools]-[Robot Manager]).
(You may also execute the Weight command from the [Command Window].)

Load on the Arm

When you attach a camera or other devices to the arm, calculate the weight as the equivalent of the shaft. Then, add this to the load and enter the total weight to the Weight parameter.

Equivalent Weight Formula

When you attach the equipment near Arm #2: $W_M = M (L_1)^2/(L_1+L_2)^2$

When you attach the equipment to the end of Arm #2: $W_M = M (L_M)^2/(L_2)^2$

W_M : equivalent weight

M : weight of camera etc.

L_1 : length of Arm #1

L_2 : length of Arm #2

L_M : distance from rotation center of Joint #2 to center of gravity of camera etc.

<Example> A “1 kg” camera is attached to the end of the G10 series arm (500 mm away from the rotation center of Joint #2) with a load weight of “2 kg”.

$M=1$

$L_2=400$

$L_M=500$

$W_M=1\times500^2/400^2=1.56 \rightarrow 1.6$ (round up)

$W+W_M=2+1.6=3.6$

Enter “3.6” for the Weight Parameter.

Automatic speed setting by Weight

G10 series

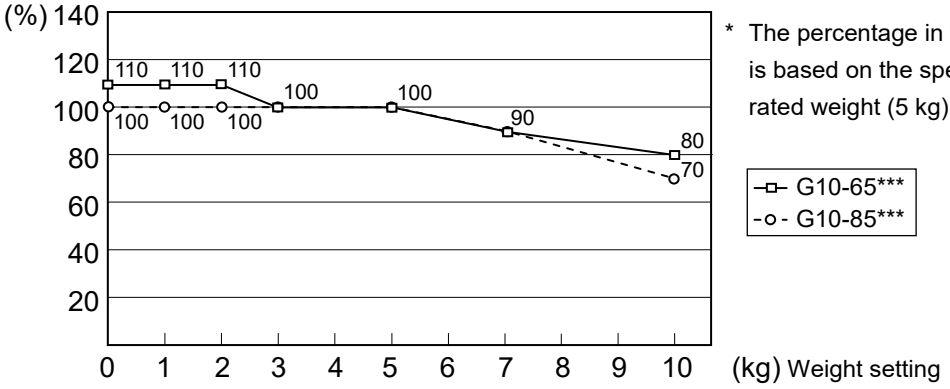

* The percentage in the graph is based on the speed at rated weight (5 kg) as 100%.

G10-65***
G10-85***

G20 series

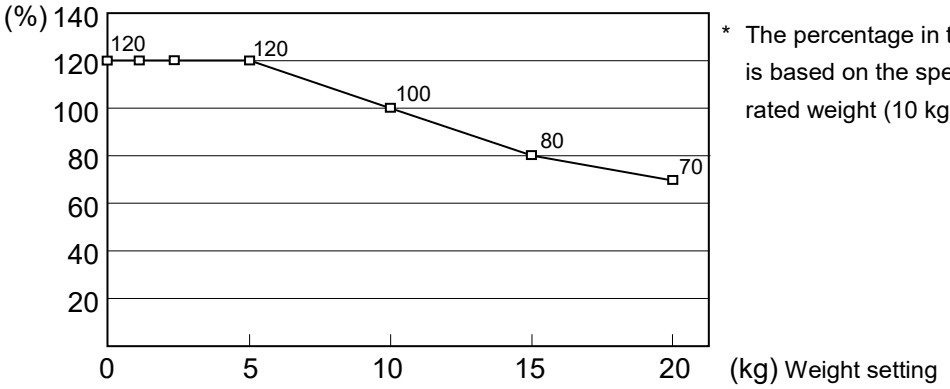

* The percentage in the graph is based on the speed at rated weight (10 kg) as 100%.

Automatic acceleration/deceleration setting by Weight

G10 series

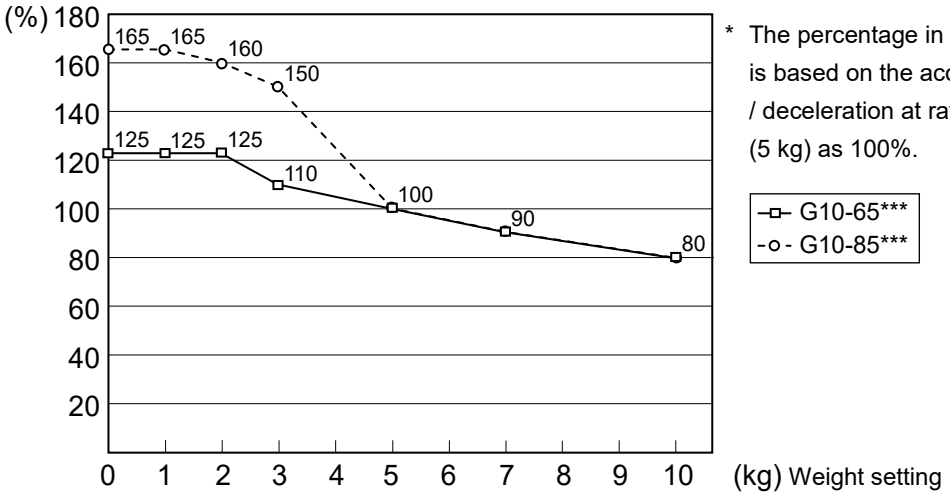

* The percentage in the graph is based on the acceleration / deceleration at rated weight (5 kg) as 100%.

—□— G10-65***
-○- G10-85***

G20 series

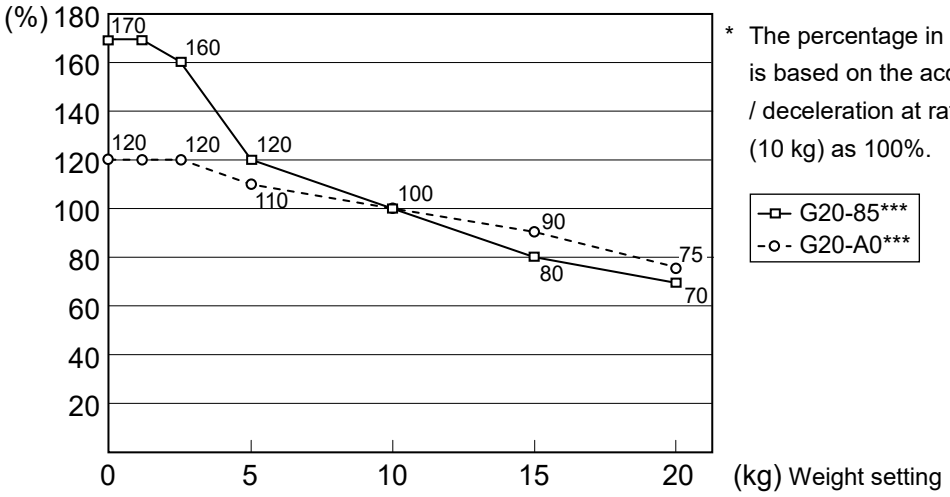

* The percentage in the graph is based on the acceleration / deceleration at rated weight (10 kg) as 100%.

—□— G20-85***
-○- G20-A0***

4.3.2 Inertia Setting

Moment of Inertia and the Inertia Setting

The moment of inertia is defined as “the ratio of the torque applied to a rigid body and its resistance to motion”. This value is typically referred to as “the moment of inertia”, “inertia”, or “GD^2”. When the Manipulator operates with additional objects (such as an end effector) attached to the shaft, the moment of inertia of load must be considered.

CAUTION	■ G10 series The moment of inertia of the load (weight of the end effector and work piece) must be 0.25 kg·m^2 or less. The G10 series Manipulators are not designed to work with a moment of inertia exceeding 0.25 kg·m^2. G20 series The moment of inertia of the load (weight of the end effector and work piece) must be 0.45 kg·m^2 or less. The G20 series Manipulators are not designed to work with a moment of inertia exceeding 0.45 kg·m^2. Always set the moment of inertia parameter to the correct moment of inertia. Setting a value that is smaller than the actual moment of inertia may cause errors, excessive shock, insufficient function of the Manipulator, and/or shorten the life cycle of parts/mechanisms.

The acceptable moment of inertia of load for a G10 series and G20 series Manipulators are as follows.

	Rated	Max.
G10 series	0.02 kg·m^2	0.25 kg·m^2
G20 series	0.05 kg·m^2	0.45 kg·m^2

When the moment of inertia of the load exceeds the rating, change the setting of the moment of inertia parameter of the Inertia command. After the setting is changed, the maximum acceleration/deceleration speed of Joint #4 at PTP motion corresponding to the “moment of inertia” value is set automatically.

Moment of inertia of load on the shaft

The moment of inertia of load (weight of the end effector and work piece) on the shaft can be set by the “moment of inertia” parameter of the Inertia command.

EPSON RC+

Enter a value into the [Load inertia:] text box on the [Inertia] panel ([Tools]-[Robot Manager]). (You may also execute the Inertia command from the [Command Window].)

Automatic acceleration/deceleration setting of Joint #4 by Inertia (moment of inertia)

G10 series

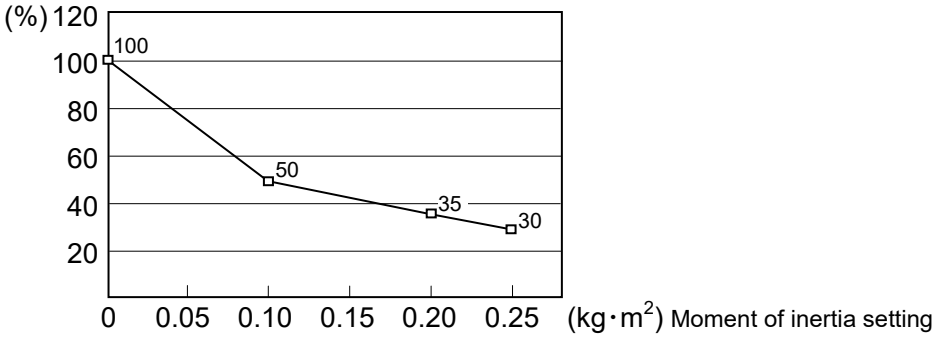

G20 series

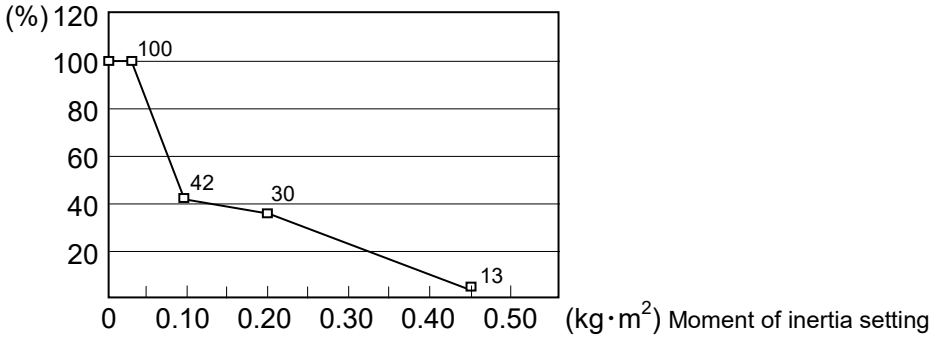

Eccentric Quantity and the Inertia Setting

CAUTION	■ The eccentric quantity of load (weight of the end effector and work piece) must be 200 mm or less. The G10 series and G20 series Manipulators are not designed to work with eccentric quantity exceeding 200 mm. Always set the eccentric quantity parameter according to the eccentric quantity. Setting a value that is smaller than the actual eccentric quantity may cause errors, excessive shock, insufficient function of the Manipulator, and/or shorten the life cycle of parts/mechanisms.

The acceptable eccentric quantity of load in G10 series and G20 series Manipulators is 0 mm at the default rating and 200 mm at the maximum. When the eccentric quantity of load exceeds the rating, change the setting of eccentric quantity parameter of Inertia command. After the setting is changed, the maximum acceleration/deceleration speed of the Manipulator at PTP motion corresponding to the “eccentric quantity” is set automatically.

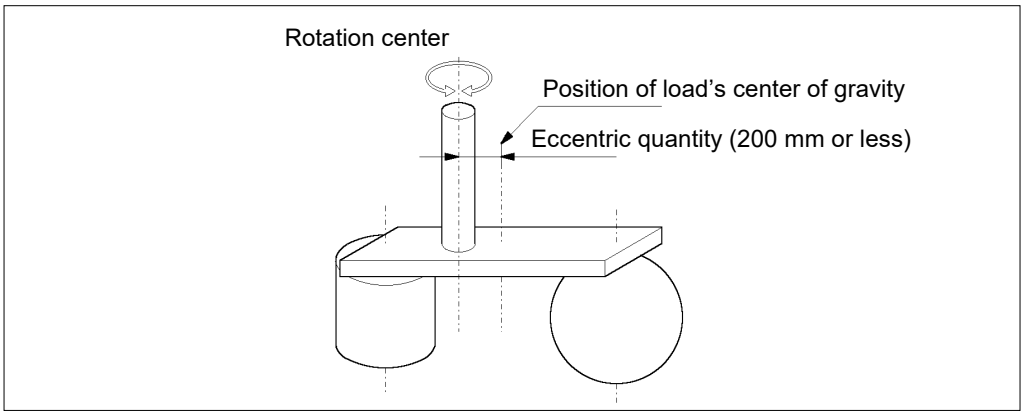

Eccentric Quantity

Eccentric quantity of load on the shaft

The eccentric quantity of load (weight of the end effector and work piece) on the shaft can be set by “eccentric quantity” parameter of Inertia command.

EPSON RC+

Enter a value into the [Eccentricity:] text box on the [Inertia] panel ([Tools]-[Robot Manager]). (You may also execute the Inertia command from the [Command Window].)

Automatic acceleration/deceleration setting by Inertia (eccentric quantity)

G10 series and G20 series

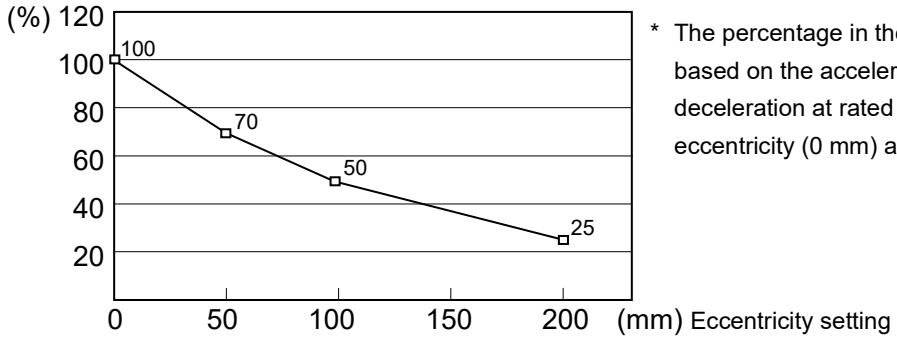

* The percentage in the graph is based on the acceleration / deceleration at rated eccentricity (0 mm) as 100%.

Calculating the Moment of Inertia

Refer to the following examples of formulas to calculate the moment of inertia of load (end effector with work piece).

The moment of inertia of the entire load is calculated by the sum of each part (a), (b), and (c).

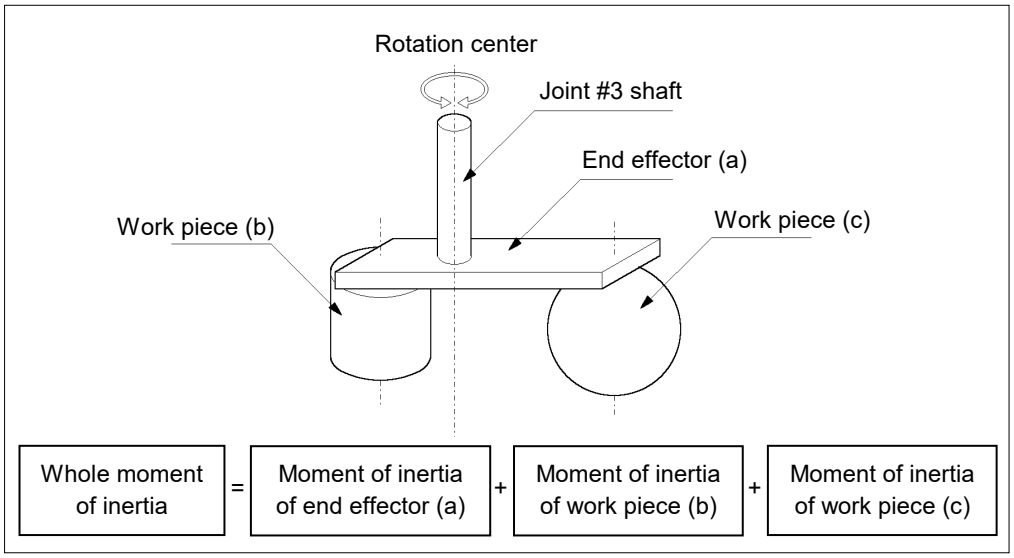

The methods for calculating the moment of inertia for (a), (b), and (c) are shown below. Calculate the total moment of inertia using the basic formulas.

(a) Moment of inertia of a rectangular parallelepiped

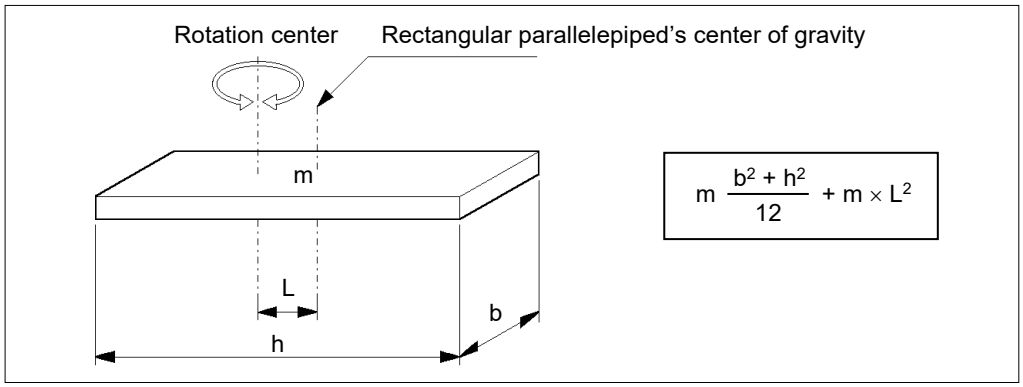

(b) Moment of inertia of a cylinder

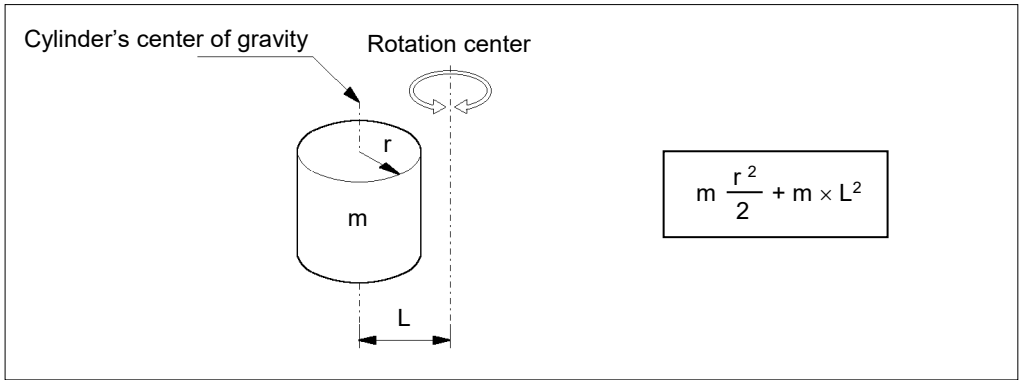

(c) Moment of inertia of a sphere

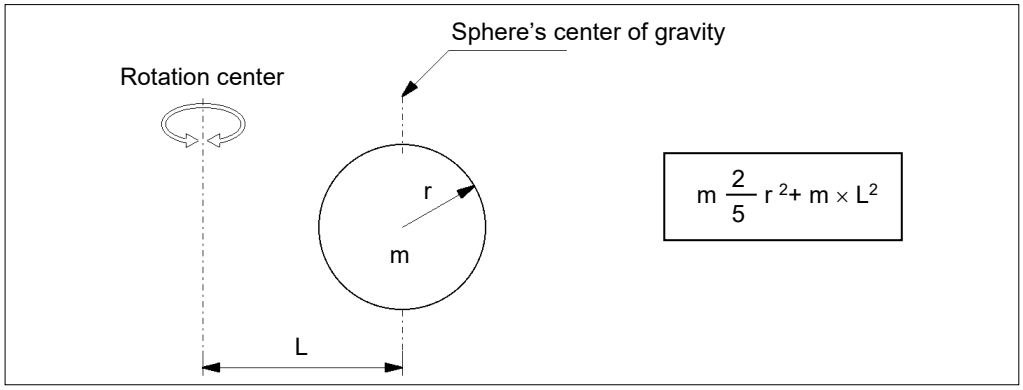

4.4 Precautions for Auto Acceleration/Deceleration of Joint #3

When you move the Manipulator in horizontal PTP motion with Joint #3 (Z) at a high position, the motion time will be faster.
When Joint #3 gets below a certain point, then auto acceleration/deceleration is used to reduce acceleration/deceleration. (Refer to the figure below.) The higher the position of the shaft is, the faster the motion acceleration/deceleration is. However, it takes more time to move Joint #3 up and down. Adjust the position of Joint #3 for the Manipulator motion after considering the relation between the current position and the destination position.
The upper limit of Joint #3 during horizontal motion using Jump command can be set by the LimZ command.

Automatic acceleration/deceleration vs. Joint #3 position

G10 series and G20 series

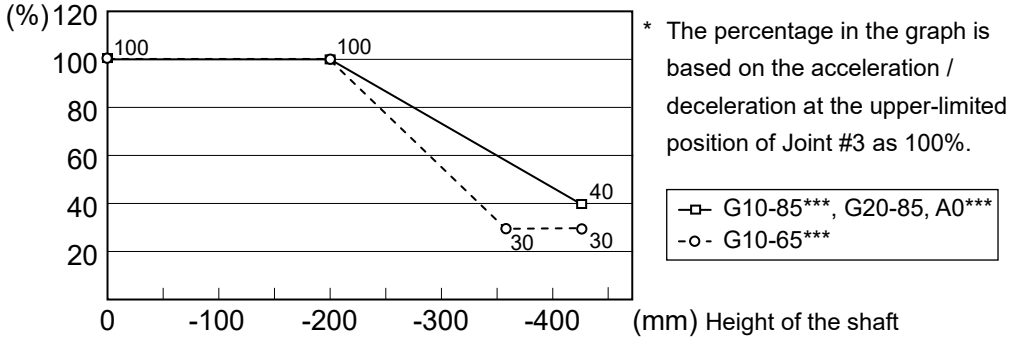

NOTE ☞ When moving the Manipulator horizontally while the shaft is being lowered, it may cause over-shoot at the time of final positioning.

5. Motion Range

CAUTION	■ When setting up the motion range for safety, both the pulse range and mechanical stops must always be set at the same time.

The motion range is preset at the factory as explained in *5.4 Standard Motion Range*. That is the maximum motion range of the Manipulator.

There are three methods for setting the motion range described as follows:

1. Setting by pulse range (for all joints)
2. Setting by mechanical stops (for Joints #1 to #3)
3. Setting the Cartesian (rectangular) range in the X, Y coordinate system of the Manipulator (for Joints #1 and #2)

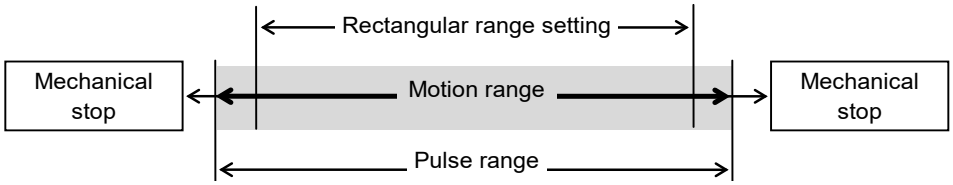

When the motion range is changed due to layout efficiency or safety, follow the descriptions in *5.1* to *5.3* to set the range.

5.1 Motion Range Setting by Pulse Range

Pulses are the basic unit of Manipulator motion. The motion range of the Manipulator is controlled by the pulse range between the pulse lower limit and upper limit of each joint. Pulse values are read from the encoder output of the servo motor.

For the maximum pulse range, refer to the following sections.
The pulse range must be set inside of the mechanical stop range.

5.1.1 Max. Pulse Range of Joint #1
5.1.2 Max. Pulse Range of Joint #2
5.1.3 Max. Pulse Range of Joint #3
5.1.4 Max. Pulse Range of Joint #4.

NOTE

Once the Manipulator receives an operating command, it checks whether the target position specified by the command is within the pulse range before operating. If the target position is out of the set pulse range, an error occurs and the Manipulator does not move.

EPSON RC+

The pulse range can be set on the [Range] panel shown by selecting [Tools]-[Robot Manager]. (You may also execute the Range command from the [Command Window].)

5.1.1 Max. Pulse Range of Joint #1

The 0 (zero) pulse position of Joint #1 is the position where Arm #1 faces toward the positive (+) direction on the X-coordinate axis.
When the 0 pulse is a starting point, the counterclockwise pulse value is defined as the positive (+) and the clockwise pulse value is defined as the negative (−).

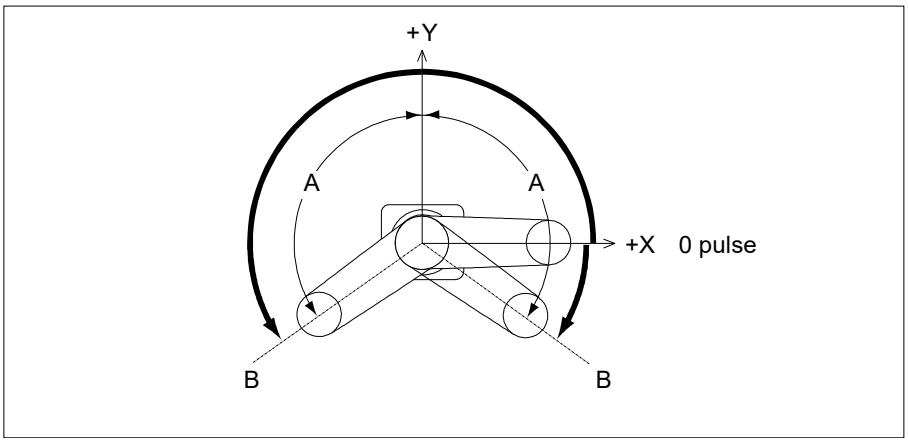

	Arm length	Table Top Mounting	Ceiling Mounting	Wall mounting
A: Max. Motion Range	65	±152 degrees		±107 degrees
	85, A0			
B: Max. Pulse Range	65	−1805881 to +7048761		−495161 to 5738041
	85, A0			

5.1.2 Max. Pulse Range of Joint #2

The 0 (zero) pulse position of Joint #2 is the position where Arm #2 is in-line with Arm #1. With the 0 pulse as a starting point, the counterclockwise pulse value is defined as the positive (+) and the clockwise pulse value is defined as the negative (−).

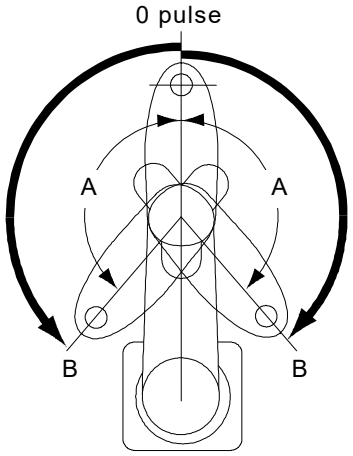

	Model		Table Top Mounting	Ceiling, Wall Mountings
A: Max. Motion Range	G10-65***		±152.5 degrees	±130 degrees
	G10/G20-85*S*, D*			±152.5 degrees
	G10/G20-85*C*, P*, D* bellows	Z: 0 to –360		±151 degrees
		Z: –360 to –390	±151 degrees	
	G20-A0***		±152.5 degrees	±152.5 degrees
B: Max. Pulse Range	G10-65***		±2776178	±2366578
	G10/G20-85*S*, D*			±2776178
	G10/G20-85*C*, P*, D* bellows	Z: 0 to –360		±2748871
		Z: –360 to –390	±2748871	
	G20-A0***		±2776178	±2776178

The bellows for G10/G20-***D are options at shipment.

NOTE
In the range Z: –360 to –390 mm, the area is limited by interference of the Manipulator body and the arm.

5.1.3 Max. Pulse Range of Joint #3

The 0 (zero) pulse position of Joint #3 is the position where the shaft is at its upper limit. The pulse value is always negative because Joint #3 always moves lower than the 0 pulse position.

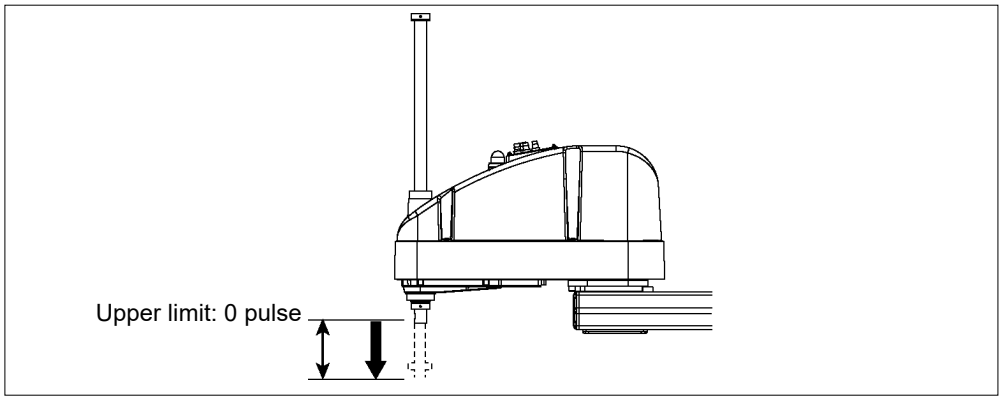

Model	Joint #3 Stroke	Minimum Limit Pulse
G10/G20-**1S*, D*	180 mm	−1946420
G10/G20-**4S*, D*	420 mm	−2270823
G10/G20-**1C*, P*, D* bellows	150 mm	−1622016
G10/G20-**4C*, P*, D* bellows	390 mm	−2108621

The bellows for G10/G20-***D* are options at shipment.

NOTE

For the Cleanroom-model (G10/G20-***C*) and Protected-model (G10/G20-*** P*, D* with bellows option), the motion range set with the Joint #3 mechanical stop cannot be changed.

5.1.4 Max. Pulse Range of Joint #4

The 0 (zero) pulse position of Joint #4 is the position where the flat face on the shaft end is facing toward the tip of Arm #2. With the 0 pulse as a starting point, the counterclockwise pulse value is defined as the positive (+) and the clockwise pulse value is defined as the negative (−).

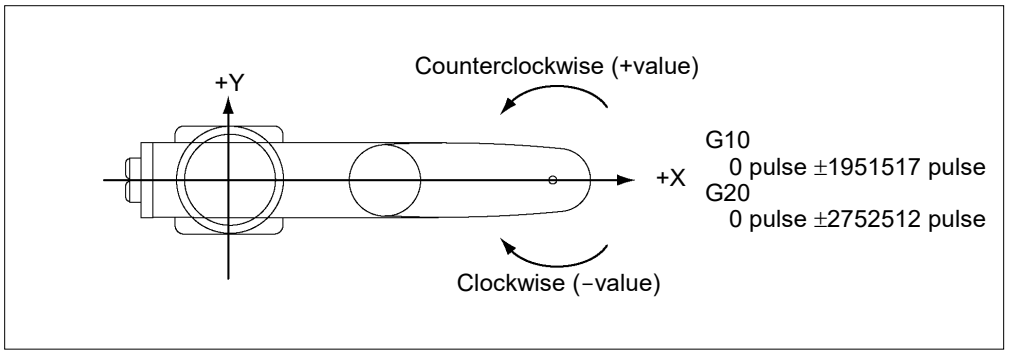

5.2 Motion Range Setting by Mechanical Stops

Mechanical stops physically limit the absolute area that the Manipulator can move.

Both Joints #1 and #2 have threaded holes in the positions corresponding to the angle for the mechanical stop settings. Install the bolts in the holes corresponding to the angle that you want to set.

Joints #3 can be set to any length less than the maximum stroke.

Table Top Mounting

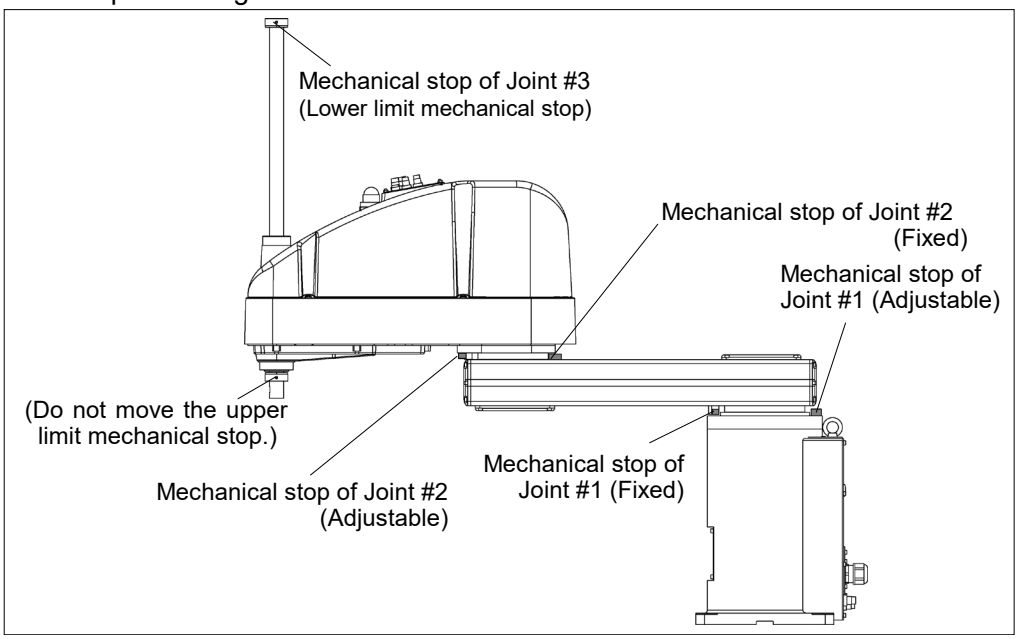

Wall Mounting

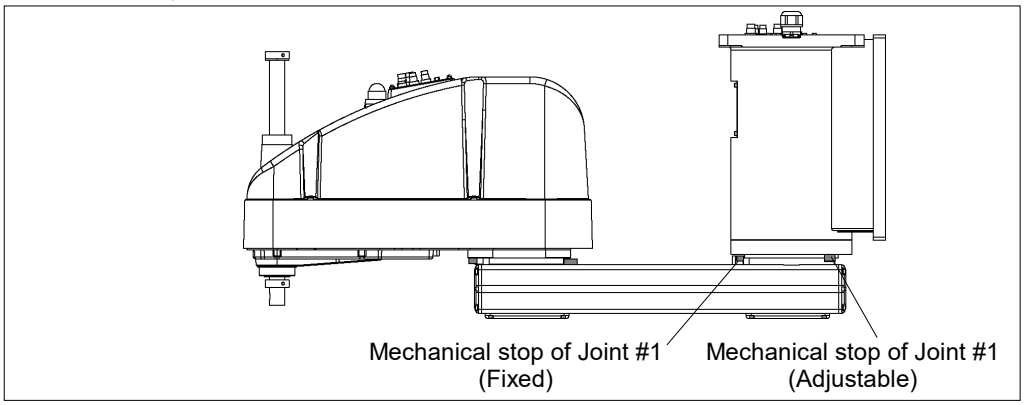

Ceiling Mounting

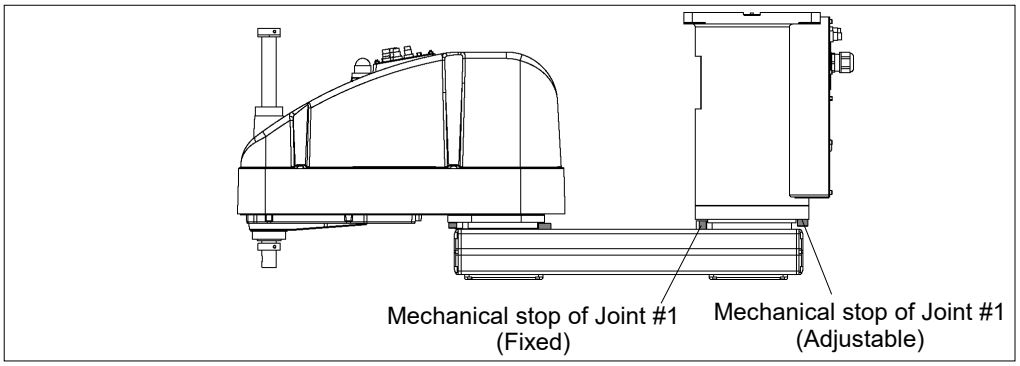

* The different mechanical stop positions from Table Top mounting are indicated for Wall mounting and Ceiling mounting.

5.2.1 Setting the Mechanical Stops of Joints #1 and #2

Both Joints #1 and #2 have threaded holes in the positions corresponding to the angle for the mechanical stop settings. Install the bolts in the holes corresponding to the angle that you want to set.

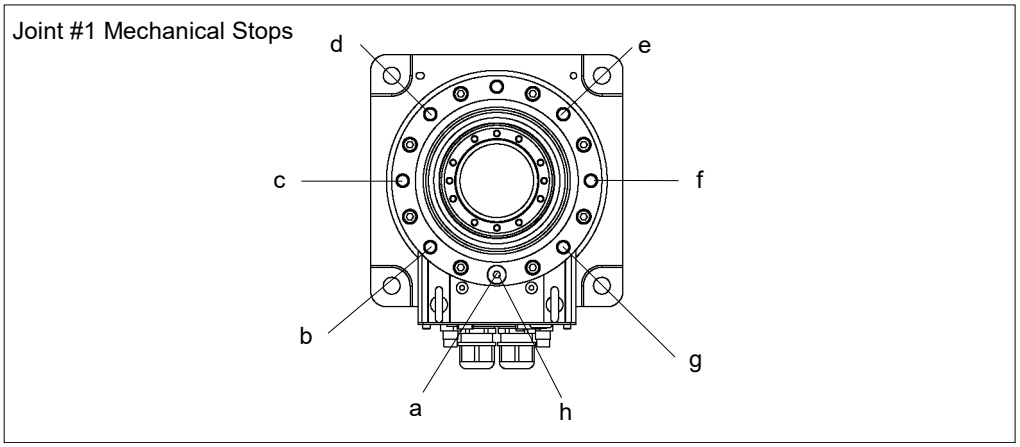

Joint #1

Mounting	Arm Length	a	b	c	d	e	f	g	h
Table Top	65, 85, A0	+152°	+107°	+60°	+15°	−15°	−60°	−107°	−152°
Ceiling	85, A0								
Ceiling	65								
Wall	65, 85, A0								

	a	b	c	d	e	f	g	h
Setting Angle	+152°	+107°	+60°	+15°	−15°	−60°	−107°	−152°
Pulse Value	+7048761	+5738041	+4369067	+3058347	+2184534	+873814	−495161	−1805881

(°: degree)

Joint #2 Mechanical Stops

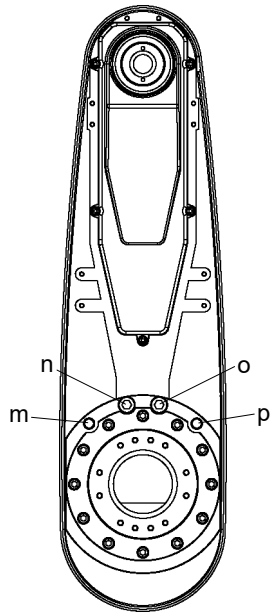

Joint #2

Model		Arm Length		m	n	o	q
Table Top, Ceiling, Wall		A0		+122.5°	+152.5°	−152.5°	−122.5°
Table Top	G10/G20-85*S, D	85					
	G10/G20-85*C, P, D bellows	85	Z: 0 to –360				
			Z: –360 to –390	+121°	+151°	−151°	−121°
Ceiling / Wall	G10/G20-85*SR, SW, DR, DW	85		+122.5°	+152.5°	−152.5°	−122.5°
	G10/G20-85*CR, CW, PR, PW, DR bellows, DW bellows	85		+100°	+130°	−130°	−100°
Table Top		65		+122.5°	+152.5°	−152.5°	−122.5°
Ceiling, Wall		65		+100°	+130°	−130°	−100°

The bellows for G10/G20-***D* are options at shipment.

Setting Angle	+100°	+121°	+122.5°	+151°	+152.5°
Pulse Value	+1820445	+2202738	+2230045	+2748871	+2776178

Setting Angle	−152.5°	−151°	−122.5°	−121°	−100°
Pulse Value	−2776178	−2748871	−2230045	−2202738	−1820445

(°: degree)

NOTE
In the range Z: –360 to –390 mm, the area is limited by interference of the Manipulator body and the arm.

(1) Turn OFF the Controller.

(2) Install a hexagon socket head cap bolt into the hole corresponding to the setting angle, and tighten it.

Joint	Hexagon socket head cap bolt (fully threaded)	The number of bolts	Recommended tightening torque	Strength
1	M12 × 20	1	127.4 N·m (1300 kgf·cm)	ISO898-1 property class 10.9 or 12.9.
2	M10 × 10	2	73.5 N·m (750 kgf·cm)	

(3) Turn ON the Controller.

(4) Set the pulse range corresponding to the new positions of the mechanical stops.

NOTE

Be sure to set the pulse range inside the positions of the mechanical stop range.

Example: Using G10-854S
The angle of Joint #1 is set from −105 degrees to +105 degrees.
The angle of Joint #2 is set from −122.5 degrees to +122.5 degrees.

EPSON RC+

Execute the following commands from the [Command Window].

```
>JRANGE 1,-436907,5679787     ' Sets the pulse range of Joint #1
>JRANGE 2,-2230045,2230045    ' Sets the pulse range of Joint #2
>RANGE                        ' Checks the setting using Range
-436907,5679787,-2230045,2230045,-1946420
    ,0,-1951517, 1951517
```

(5) Move the arm by hand until it touches the mechanical stops, and make sure that the arm does not hit any peripheral equipment during operation.

(6) Operate the joint changed at low speeds until it reaches the positions of the minimum and maximum pulse range. Make sure that the arm does not hit the mechanical stops. (Check the position of the mechanical stop and the motion range you set.)

Example: Using G10-854S
The angle of Joint #1 is set from −105 degrees to +105 degrees.
The angle of Joint #2 is set from −122.5 degrees to +122.5 degrees.

EPSON RC+

Execute the following commands from the [Command Window].

```
>MOTOR ON                      'Turns ON the motor
>POWER LOW                     'Enters low-power mode
>SPEED 5                       'Sets at low speeds
>PULSE -436907,0,0,0           'Moves to the min. pulse position of Joint #1
>PULSE 5679787,0,0,0           'Moves to the max. pulse position of Joint #1
>PULSE 2621440,-2230045,0,0 'Moves to the min. pulse position of Joint #2
>PULSE 2621440,2230054,0,0  'Moves to the max. pulse position of Joint #2
```

The Pulse command (Go Pulse command) moves all joints to the specified positions at the same time. Specify safe positions after considering motion of not only the joints whose pulse range have been changed, but also other joints.

In this example, Joint #1 is moved to the center of its motion range (pulse value: 2621440) when checking Joint #2.

If the arm is hitting the mechanical stops or if an error occurs after the arm hits the mechanical stops, either reset the pulse range to a narrower setting or extend the positions of the mechanical stops within the limit.

5.2.2 Setting the Mechanical Stop of Joint #3

NOTE This method applies only to the Standard-model Manipulator (G10/G20-***S*) and Protected-model Manipulator (G10/G20-***D* without bellows option).
For the Cleanroom-model (G10/G20-***C*) and Protected-model (G10/G20-***D* with bellows option), the motion range set with the Joint #3 mechanical stop cannot be changed.

(1) Turn ON the Controller and turn OFF the motors using the Motor OFF command.

(2) Push up the shaft while pressing the brake release switch.

Do not push the shaft up to its upper limit or it will be difficult for the arm top cover to be removed. Push the shaft up to a position where the Joint #3 mechanical stop can be changed.

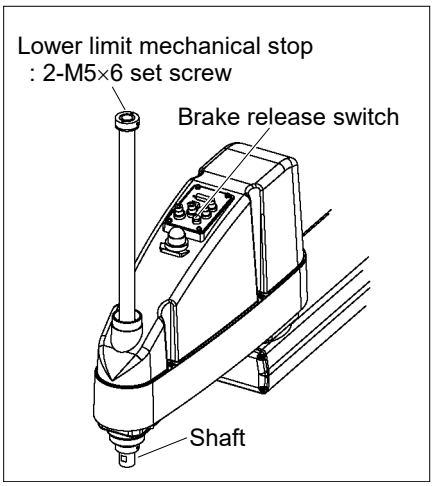

NOTE When you press the brake release switch, the shaft may lower and rotate due to the weight of the end effector. Be sure to hold the shaft by hand while pressing the button.

(3) Turn OFF the Controller.

(4) Loosen the lower limit mechanical stop set screw (2-M5×6).

NOTE A mechanical stop is mounted on both the top and bottom of Joint #3. However, only the position of the lower limit mechanical stop on the top can be changed. Do not remove the upper limit mechanical stop on the bottom because the calibration point of Joint #3 is specified using the stop.

(5) The upper end of the shaft defines the maximum stroke. Move the lower limit mechanical stop down by the length you want to limit the stroke.
For example, when the lower limit mechanical stop is set at “420 mm” stroke, the lower limit Z coordinate value is “−420”. To change the value to “−100”, move the lower limit mechanical stop down “320 mm”. Use calipers to measure the distance when adjusting the mechanical stop.

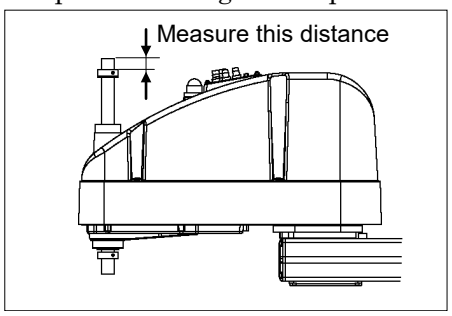

(6) Firmly tighten two setscrews which are open at a 120 degrees interval so that they do not enter the shaft groove.
Recommended tightening torque: 9.8 N·m (100 kgf·cm)

(7) Turn ON the Controller.

(8) Move Joint #3 to its lower limit while pressing the brake release switch, and then check the lower limit position. Do not lower the mechanical stop too far. Otherwise, the joint may not reach a target position.

(9) Calculate the lower limit pulse value of the pulse range using the formula shown below and set the value.

The result of the calculation is always negative because the lower limit Z coordinate value is negative.

G10-851S (Z: 180mm)
Lower limit of pulse = lower limit Z coordinate value/25×131072×(66/32)

G10-854S (Z: 420mm)
Lower limit of pulse = lower limit Z coordinate value/50×131072×(66/32)

Example: When lowering the mechanical stop by 80 mm and changing the lower limit Z coordinate value to "−100" in 180 mm stroke
(−100)/25×131072×(66/32) = −1081344

EPSON RC+ Execute the following command from the [Command Window].

```
>JRANGE 3,-1081344,0        ' Sets the pulse range of Joint #3
```

Example: When lowering the mechanical stop by 320 mm and changing the lower limit Z coordinate value to "−100" in 420 mm stroke
(−100) / 50 × 131072 × (66/32) = −540672

EPSON RC+ Execute the following command from the [Command Window].

```
>JRANGE 3,-540672,0        ' Sets the pulse range of Joint #3
```

(10) Using the Pulse command (Go Pulse command), move Joint #3 to the lower limit position of the pulse range at low speed. If the mechanical stop range is less than the pulse range, Joint #3 will hit the mechanical stop and an error will occur. When the error occurs, either change the pulse range to a lower setting or extend the position of the mechanical stop within the limit.

NOTE ☞ If it is difficult to check whether Joint #3 hits a mechanical stop, turn OFF the Controller and lift the arm top cover to check the condition causing the problem from the side.

Example: When lowering the mechanical stop by 80 mm and changing the lower limit Z coordinate value to "−100" in 180 mm stroke

EPSON RC+

Execute the following commands from the [Command Window].

```
>MOTOR ON                 ' Turns ON the motor
>SPEED 5                  ' Sets low speed
>PULSE 0,0,-1081344,0     ' Moves to the lower limit-pulse position of Joint #3.
                            (In this example, all pulses except those for Joint #3
                            are "0". Substitute these "0s" with the other pulse
                            values specifying a position where there is no
                            interference even when lowering Joint #3.)
```

Example: When lowering the mechanical stop by 320 mm and changing the lower limit Z coordinate value to "−100" in 420 mm stroke

EPSON RC+

Execute the following commands from the [Command Window].

```
>MOTOR ON                 ' Turns ON the motor
>SPEED 5                  ' Sets low speed
>PULSE 0,0,-540672,0      ' Moves to the lower limit-pulse position of Joint #3.
                            (In this example, all pulses except those for Joint #3
                            are "0". Substitute these "0s" with the other pulse
                            values specifying a position where there is no
                            interference even when lowering Joint #3.)
```

5.3 Setting the Cartesian (Rectangular) Range in the XY Coordinate System of the Manipulator (for Joints #1 and #2)

Use this method to set the upper and lower limits of the X and Y coordinates.

This setting is only enforced by software. Therefore, it does not change the physical range. The maximum physical range is based on the position of the mechanical stops.

EPSON RC+

Set the XYLim setting on the [XYZ Limits] panel shown by selecting [Tools]-[Robot Manager].
(You may also execute the XYLim command from the [Command Window].)

5.4 Standard Motion Range

The following “motion range” diagrams show the standard (maximum) specification. When each Joint motor is under servo control, the center of Joint #3’s (shaft’s) lowest point moves in the areas shown in the figure.

“Area limited by mechanical stop” is the area where the center of Joint #3’s lowest point can be moved when each joint motor is not under servo control.

“Mechanical stop” sets the limited motion range so that the center of Joint #3 cannot move beyond the area mechanically.

“Maximum space” is the area that contains the farthest reach of the arms. If the maximum radius of the end effector is over 60 mm, add the “Area limited by mechanical stop” and “radius of the end effector”. The total value is specified as the maximum area.

Table Top Mounting

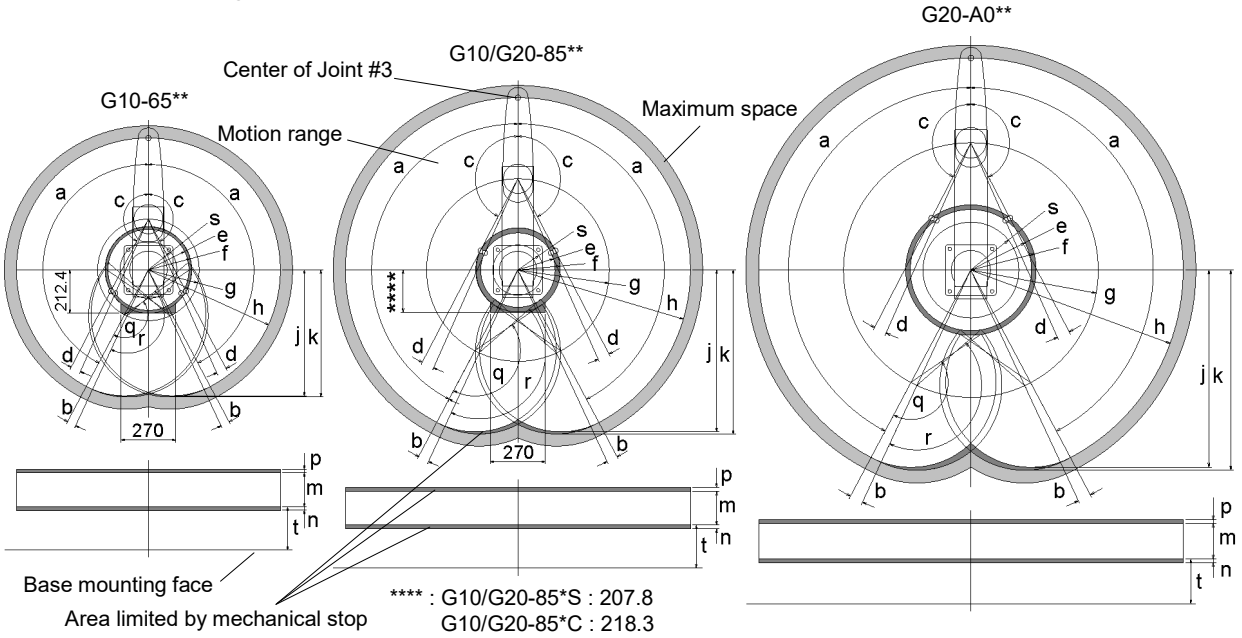

(°: degree)

		a	b	c	d	e	f	g	h	j	k	q
G10-65**		152°	3°	152.5°	3.5°	199.4	212.4	250	650	620.7	626.6	152.5
G10/G20-85*S, D						183.3	207.8	450	850	797.3	807.8	
G10/G20-85*C, P, D bellows	Z: 0 to –360											
	Z: –360 to –390			151°	5°		218.3					151
G20-A0**				152.5°	3.5°	285.4	307	600	1000	929.8	943.8	152.5

	r	s
G10-65**	156	139.4
G10/G20-85**		123.3
G20-A0**		225.4

	m	n	p	t
G10/G20-**1S, D	180	5	5	393.5
G10/G20-**4S, D	420			
G10/G20-**1C, P, D bellows	150	1	1.8	355.5
G10/G20-**4C, P, D bellows	390			

The bellows for G10/G20-***D* are options at shipment.

NOTE In the range Z: –360 to –390 mm, the area is limited by interference of the Manipulator body and the arm.

Wall Mounting

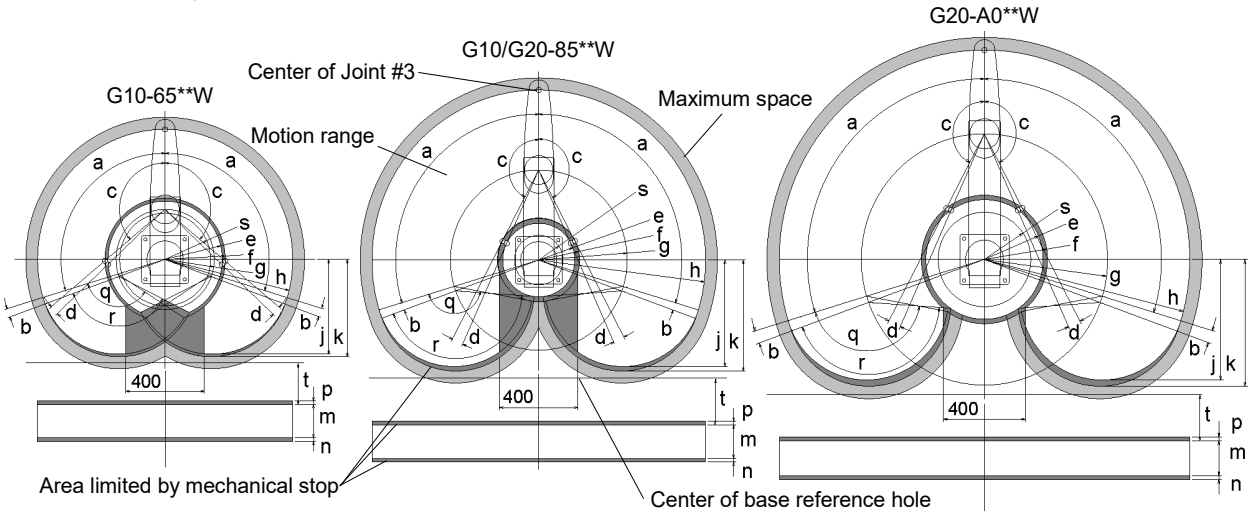

(°: degree)

	a	b	c	d	e	f	g	h	j	k	q	r	s
G10-65**W	107°	3°	130°	3.5°	291.2	306.5	250	650	473.1	485.5	130	133.5	231.2
G10/G20-85*SW, DW			152.5°		183.3	207.8	450	850	531.6	553.9	152.5	156	123.3
G10/G20-85*CW, PW, DW bellows			151°	5°		218.3					151		
G20-A0**W			152.5°	3.5°	285.4	307	600	1000	575.4	605.2	152.5		225.4

	m	n	p	t
G10/G20-**1SW, DW	180	5	5	202.5
G10/G20-**4SW, DW	420			
G10/G20-**1CW, PW, DW bellows	150	1	1.8	240.5
G10/G20-**4CW, PW, DW bellows	390			

The bellows for G10/G20-***DW are options at shipment.

Ceiling Mounting

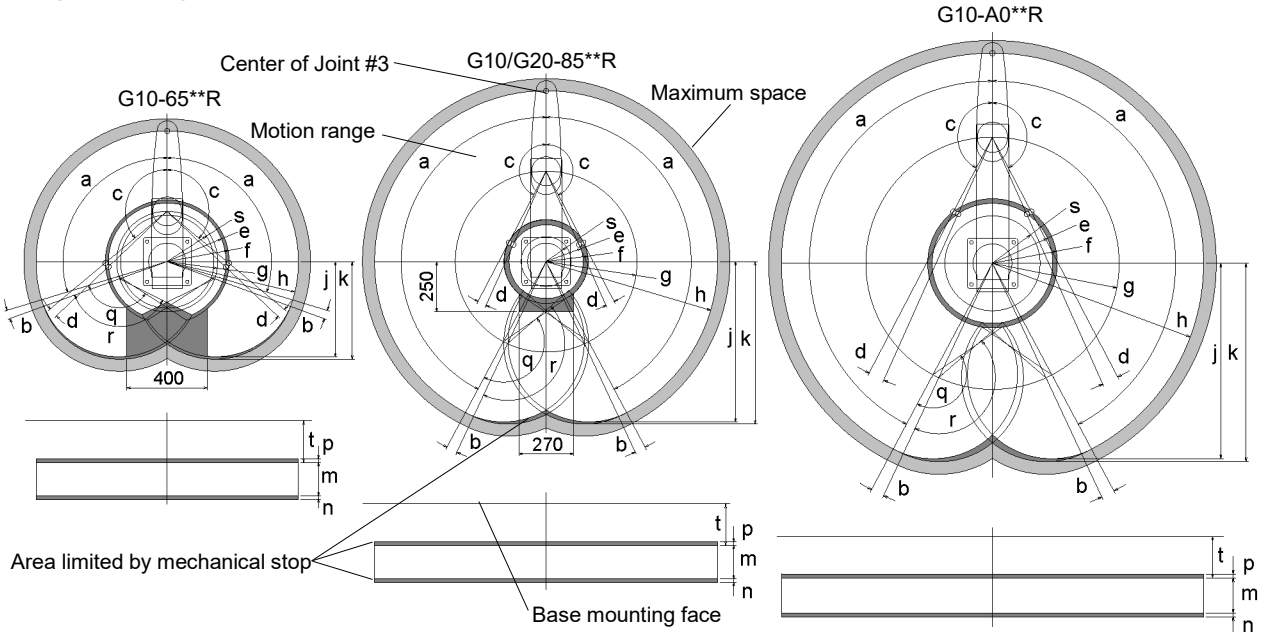

(°: degree)

	a	b	c	d	e	f	g	h	j	k	q	r	s
G10-65**R	107°	3°	130°	3.5°	291.2	306.5	250	650	473.1	485.5	130	133.5	231.2
G10/G20-85*SR, DR	152°		152.5°		183.3	207.8	450	850	797.3	807.8	152.5	156	123.3
G10/G20-85*CR, PR, DR bellows			151°	5°		218.3					151		
G20-A0**R			152.5°	3.5°	285.4	307	600	1000	929.8	943.8	152.5		225.4

	m	n	p	t
G10/G20-**1SR, DR	180	5	5	447.5
G10/G20-**4SR, DR	420			
G10/G20-**1CR, PR, DR bellows	150	1	1.8	485.5
G10/G20-**4CR, PR, DR bellows	390			

The bellows for G10/G20-***DR are options at shipment.

Regular Inspection

Performing inspection properly is essential to prevent trouble and ensure safety.
This volume describes the inspection schedule and contents.
Inspect according to the schedule.

1. Regular Inspection for G1 Manipulator

1.1 Maintenance Inspection

1.1.1 Schedule for Maintenance Inspection

Inspection points are divided into five stages: daily, monthly, quarterly, biannual, and annual. The inspection points are added every stage.
If the Manipulator is operated for 250 hours or longer per month, the inspection points must be added every 250 hours, 750 hours, 1500 hours, and 3000 hours operation.

	Inspection Point					
	Daily inspection	Monthly inspection	Quarterly inspection	Biannual inspection	Annual inspection	Overhaul (replacement)*
1 month (250 h)	Inspect every day	√				
2 months (500 h)		√				
3 months (750 h)		√	√			
4 months (1000 h)		√				
5 months (1250 h)		√				
6 months (1500 h)		√	√	√		
7 months (1750 h)		√				
8 months (2000 h)		√				
9 months (2250 h)		√	√			
10 months (2500 h)		√				
11 months (2750 h)		√				
12 months (3000 h)		√	√	√	√	
13 months (3250 h)		√				
⋮	⋮	⋮	⋮	⋮	⋮	⋮
20000 h						√

* Overhaul (parts replacement)

1.1.2 Inspection Point

Inspection Item

Inspection Point	Inspection Place	Daily	Monthly	Quarterly	Biannual	Annual
Check looseness or backlash of bolts/screws.	End effector mounting bolts	√	√	√	√	√
	Manipulator mounting bolts	√	√	√	√	√
Check looseness of connectors.	External connectors on Manipulator (on the connector plates etc.)	√	√	√	√	√
Visually check for external defects. Clean up if necessary.	External appearance of Manipulator	√	√	√	√	√
	External cables		√	√	√	√
Check for bends or improper location. Repair or place it properly if necessary.	Safeguard etc.	√	√	√	√	√
Check the brake operation	Joint #3	√	√	√	√	√
Check whether unusual sound or vibration occurs.	Whole	√	√	√	√	√

Inspection Method

Inspection Point	Inspection Method
Check looseness or backlash of bolts/screws.	Use a hexagonal wrench to check that the end effector mounting bolts and the Manipulator mounting bolts are not loose. When the bolts are loose, refer to "*1.4 Tightening Hexagon Socket Head Bolts*" and tighten them to the proper torque.
Check looseness of connectors.	Check that connectors are not loose. When the connectors are loose, reattach it not to come off.
Visually check for external defects. Clean up if necessary.	Check the appearance of the Manipulator and clean up if necessary. Check the appearance of the cable, and if it is scratched, check that there is no cable disconnection.
Check for bends or improper location. Repair or place it properly if necessary.	Check that the safeguard, etc. are located properly. If the location is improper, place it properly.
Check the brake operation	Check that the shaft does not fall when in MOTOR OFF. If the shaft falls when in MOTOR OFF and the brake is not released, contact the supplier. Also, if the break is not released even operated release the break, contact the supplier.
Check whether unusual sound or vibration occurs.	Check that there is no unusual sound or vibration when operating. If there is something wrong, contact the supplier.

1.2 Overhaul (Parts Replacement)

Overhaul (replacement) shall be performed by personnel who has taken a proper training.
For details, refer to *Safety Manual Training*.
For details of overhaul, refer to *Maintenance Manual.*

1.3 Greasing

The ball screw spline and reduction gear units need greasing regularly. Only use the grease specified in the following table.

CAUTION	■ Keep enough grease in the Manipulator. Operating the Manipulator with insufficient grease will damage sliding parts and/or result in insufficient function of the Manipulator. Once the parts are damaged, a lot of time and money will be required for the repairs.

CAUTION	■ If grease gets into your eyes, mouth, or on your skin, follow the instructions below. If grease gets into your eyes : Flush them thoroughly with clean water, and then see a doctor immediately. If grease gets into your mouth : If swallowed, do not induce vomiting. See a doctor immediately. : If grease just gets into your mouth, wash out your mouth with water thoroughly. If grease gets on your skin : Wash the area thoroughly with soap and water.

	Greasing part	Greasing Interval	Grease	How to grease
Joint #1, Joint #2	Reduction gear units	Overhaul timing	-	Greasing shall be performed by personnel who has taken a proper training. For details, refer to the G series Manipulator Maintenance Manual.
Joint #3	Ball screw spline unit	At 100 km of operation (50 km for first greasing)	AFB	*Greasing the Ball Screw Spline Unit*

Joint #3 Ball screw spline unit

The recommended greasing interval is at 100 Km of operation. However, greasing timing also can be checked from the grease condition. Perform greasing if the grease is discolored or becomes dry.

Normal grease

Discolored grease

Perform greasing at 50 km of operation for the first time of greasing.

NOTE ☞ For EPSON RC+ 7.0 Ver. 7.2.x or later (firmware Ver.7.2.x.x or later), the recommended replacement time for the grease on the ball screw spline unit can be checked in the [Maintenance] dialog box of EPSON RC+ 7.0.
For details, refer to the following manual.
Robot Controller RC700 series "Maintenance Manual 6. Alarm"

Greasing the Ball Screw Spline Unit

	Name	Quantity	NOTE
Grease	For Ball Screw Spline Unit (AFB grease)	Proper quantity	
Tools	Wiping cloth	1	For wiping grease (Spline shaft)
	Cross-point screwdriver	1	

NOTE ☞ Cover the surrounding area such as the end effector and peripheral equipment in case the grease drips.

(1) Turn ON the Controller.

(2) Move the shaft to the lower limit by using one of the following methods:

- Move the shaft to the lower limit manually while pressing the brake release switch.

NOTE ☞ Be careful of the shaft falling and rotating while the brake release switch is being pressed because the shaft may be lowered by the weight of the end effector.

- Move the shaft to the lower limit manually while by selecting EPSON RC+ 7.0 menu - [Tools] - [Robot Manager] - [Jog & Teach].

NOTE ☞ Be sure to keep enough space and prevent the end effector hitting any peripheral equipment.

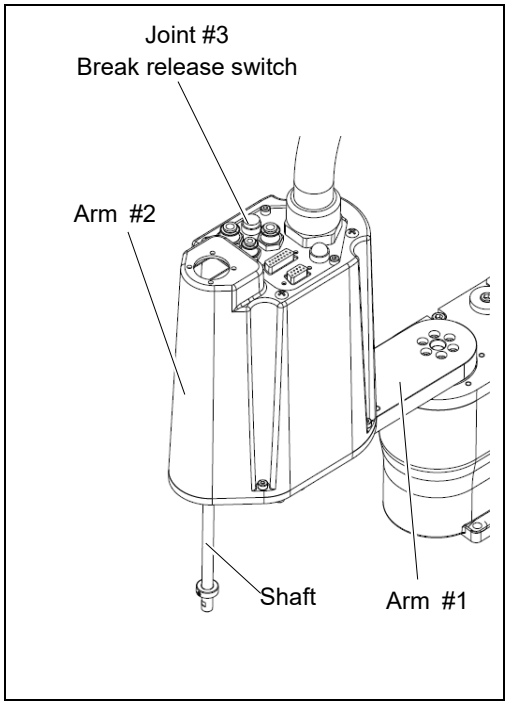

(3) Turn OFF the Controller.

(4) Wipe off the old grease from the shaft, and then apply new grease to it.

Grease application range is from the end of the spline nut to mechanical stop.

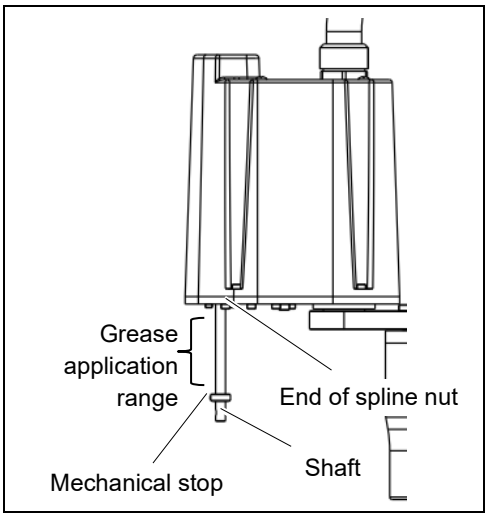

(5) Apply new grease evenly to the spiral groove of the ball screw spline unit and the vertical groove so that the groove is filled.

Grease application example

(6) Turn ON the Controller.

(7) Start the robot manager and move the shaft to the origin position. Be careful not to hit peripheral equipment.

(8) After moving to the origin position, reciprocate the shaft. The reciprocating operation is a low power mode operation program that performs from the upper limit to the lower limit. Run for about 5 minutes to spread the grease over the shaft.

(9) Turn OFF the controller.

(10) Wipe off excess grease on the end of the spline nut and mechanical stop.

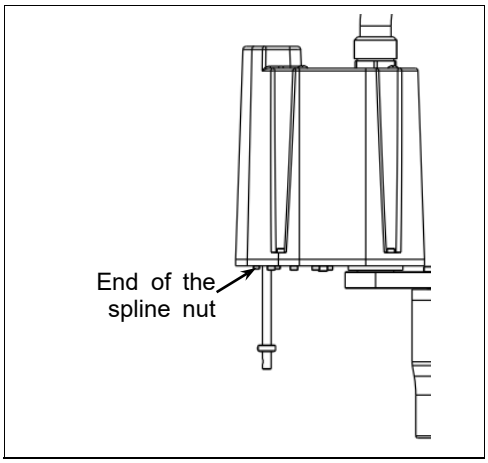

1.4 Tightening Hexagon Socket Head Cap Bolts

Hexagon socket head cap bolts are used in places where mechanical strength is required. (A hexagon socket head cap bolt will be called a “bolt” in this manual.) These bolts are fastened with the tightening torques shown in the following table.

When it is necessary to refasten these bolts in some procedures in this manual (except special cases as noted), use a torque wrench so that the bolts are fastened with the appropriate tightening torques as shown below.

Bolt	Tightening Torque
M2.5	1.4 ± 0.1 N·m (14± 1 kgf·cm)
M3	2.0 ± 0.1 N·m (21 ± 1 kgf·cm)
M4	4.0 ± 0.2 N·m (41 ± 2 kgf·cm)
M5	8.0 ± 0.4 N·m (82 ± 4 kgf·cm)
M6	13.0 ± 0.6 N·m (133 ± 6 kgf·cm)
M8	32.0 ± 1.6 N·m (326 ± 16 kgf·cm)
M10	58.0 ± 2.9 N·m (590 ± 30 kgf·cm)
M12	100.0 ± 5.0 N·m (1,020 ± 51 kgf·cm)

Refer below for the set screw.

Set Screw	Tightening Torque
M3	0.9 ± 0.1 N·m (9 ± 1 kgf·cm)
M4	2.4 ± 0.1 N·m (26 ± 1 kgf·cm)
M5	3.9 ± 0.2 N·m (40 ± 2 kgf·cm)
M6	8.0 ± 0.4 N·m (82 ± 4 kgf·cm)

We recommend that the bolts aligned on a circumference should be fastened in a crisscross pattern as shown in the figure below.

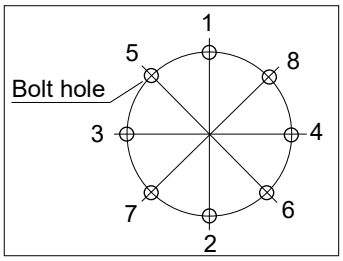

Do not fasten all bolts securely at one time. Divide the number of times that the bolts are fastened into two or three and fasten the bolts securely with a hexagonal wrench. Then, use a torque wrench so that the bolts are fastened with tightening torques shown in the table above.

2. Regular Inspection for G3 Manipulator

2.1 Maintenance Inspection

2.1.1 Schedule for Maintenance Inspection

Inspection points are divided into five stages: daily, monthly, quarterly, biannual, and annual. The inspection points are added every stage.
If the Manipulator is operated for 250 hours or longer per month, the inspection points must be added every 250 hours, 750 hours, 1500 hours, and 3000 hours operation.

	Inspection Point					
	Daily inspection	Monthly inspection	Quarterly inspection	Biannual inspection	Annual inspection	Overhaul (replacement)
1 month (250 h)	Inspect every day	√				
2 months (500 h)		√				
3 months (750 h)		√	√			
4 months (1000 h)		√				
5 months (1250 h)		√				
6 months (1500 h)		√	√	√		
7 months (1750 h)		√				
8 months (2000 h)		√				
9 months (2250 h)		√	√			
10 months (2500 h)		√				
11 months (2750 h)		√				
12 months (3000 h)		√	√	√	√	
13 months (3250 h)		√				
⋮	⋮	⋮	⋮	⋮	⋮	⋮
20000 h						√

* Overhaul (parts replacement)

2.1.2 Inspection Point

Inspection Item

Inspection Point	Inspection Place	Daily	Monthly	Quarterly	Biannual	Annual
Check looseness or backlash of bolts/screws.	End effector mounting bolts	√	√	√	√	√
	Manipulator mounting bolts	√	√	√	√	√
Check looseness of connectors.	External connectors on Manipulator (on the connector plates etc.)	√	√	√	√	√
Visually check for external defects. Clean up if necessary.	External appearance of Manipulator	√	√	√	√	√
	External cables		√	√	√	√
Check for bends or improper location. Repair or place it properly if necessary.	Safeguard etc.	√	√	√	√	√
Check the brake operation	Joint #3	√	√	√	√	√
Check whether unusual sound or vibration occurs.	Whole	√	√	√	√	√

Inspection Method

Inspection Point	Inspection Method
Check looseness or backlash of bolts/screws.	Use a hexagonal wrench to check that the end effector mounting bolts and the Manipulator mounting bolts are not loose. When the bolts are loose, refer to "2.*4 Tightening Hexagon Socket Head Bolts*" and tighten them to the proper torque.
Check looseness of connectors.	Check that connectors are not loose. When the connectors are loose, reattach it not to come off.
Visually check for external defects. Clean up if necessary.	Check the appearance of the Manipulator and clean up if necessary. Check the appearance of the cable, and if it is scratched, check that there is no cable disconnection.
Check for bends or improper location. Repair or place it properly if necessary.	Check that the safeguard, etc. are located properly. If the location is improper, place it properly.
Check the brake operation	Check that the shaft does not fall when in MOTOR OFF. If the shaft falls when in MOTOR OFF and the brake is not released, contact the supplier. Also, if the break is not released even operated release the break, contact the supplier.
Check whether unusual sound or vibration occurs.	Check that there is no unusual sound or vibration when operating. If there is something wrong, contact the supplier.

2.2 Overhaul (Parts Replacement)

Overhaul (replacement) shall be performed by personnel who has taken a proper training.
For details, refer to *Safety Manual Training*.
For details of overhaul, refer to *Maintenance Manual.*

2.3 Greasing

The ball screw spline and reduction gear units need greasing regularly. Only use the grease specified in the following table.

CAUTION	■ Keep enough grease in the Manipulator. Operating the Manipulator with insufficient grease will damage sliding parts and/or result in insufficient function of the Manipulator. Once the parts are damaged, a lot of time and money will be required for the repairs.

CAUTION	■ If grease gets into your eyes, mouth, or on your skin, follow the instructions below. If grease gets into your eyes : Flush them thoroughly with clean water, and then see a doctor immediately. If grease gets into your mouth : If swallowed, do not induce vomiting. See a doctor immediately. : If grease just gets into your mouth, wash out your mouth with water thoroughly. If grease gets on your skin : Wash the area thoroughly with soap and water.

	Greasing part	Greasing Interval	Grease	How to grease
Joint #1, Joint #2	Reduction gear units	Overhaul timing	-	Greasing shall be performed by personnel who has taken a proper training. For details, refer to the G series Manipulator Maintenance Manual.
Joint #3	Ball screw spline unit	At 100 km of operation (50 km for first greasing)	AFB	*Greasing the Ball Screw Spline Unit*

Joint #3 Ball screw spline unit

The recommended greasing interval is at 100 Km of operation. However, greasing timing also can be checked from the grease condition. Perform greasing if the grease is discolored or becomes dry.

Normal grease

Discolored grease

Perform greasing at 50 km of operation for the first time of greasing.

NOTE ☞ For EPSON RC+ 7.0 Ver. 7.2.x or later (firmware Ver.7.2.x.x or later), the recommended replacement time for the grease on the ball screw spline unit can be checked in the [Maintenance] dialog box of EPSON RC+ 7.0.
For details, refer to the following manual.
Robot Controller RC700 series "Maintenance Manual 6. Alarm"

Greasing the Ball Screw Spline Unit

	Name	Quantity	NOTE
Grease	For Ball Screw Spline Unit (AFB grease)	Proper quantity	
Tools	Wiping cloth	1	For wiping grease (Spline shaft)
	Cross-point screwdriver	1	

NOTE ☞ Cover the surrounding area such as the end effector and peripheral equipment in case the grease drips.

(1) Turn ON the Controller.

(2) Move the shaft to the lower limit by using one of the following methods:

- Move the shaft to the lower limit manually while pressing the brake release switch.

NOTE ☞ Be careful of the shaft falling and rotating while the brake release switch is being pressed because the shaft may be lowered by the weight of the end effector.

- Move the shaft to the lower limit manually while by selecting EPSON RC+ 7.0 menu - [Tools] - [Robot Manager] - [Jog & Teach].

NOTE ☞ Be sure to keep enough space and prevent the end effector hitting any peripheral equipment.

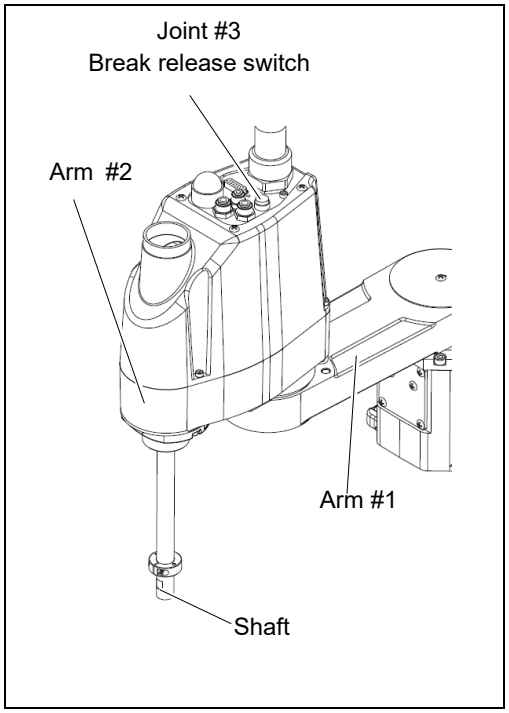

(3) Turn OFF the Controller.

(4) Wipe off the old grease from the shaft, and then apply new grease to it.

Grease application range is from the end of the spline nut to mechanical stop.

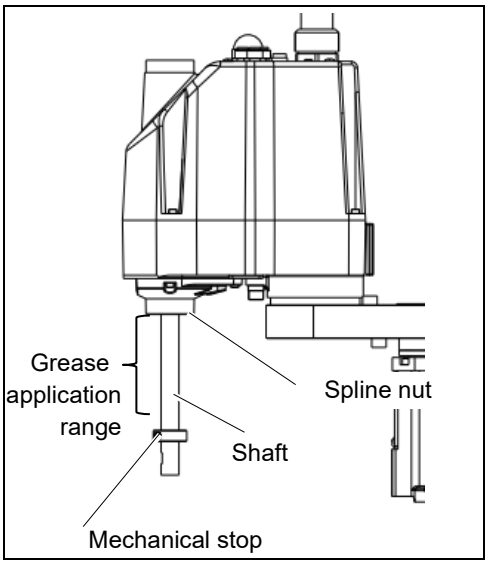

(5) Apply new grease evenly to the spiral groove of the ball screw spline unit and the vertical groove so that the groove is filled.

Grease application example

(6) Turn ON the Controller.

(7) Start the robot manager and move the shaft to the origin position. Be careful not to hit peripheral equipment.

(8) After moving to the origin position, reciprocate the shaft. The reciprocating operation is a low power mode operation program that performs from the upper limit to the lower limit. Run for about 5 minutes to spread the grease over the shaft.

(9) Turn OFF the controller.

(10) Wipe off excess grease on the end of the spline nut and mechanical stop.

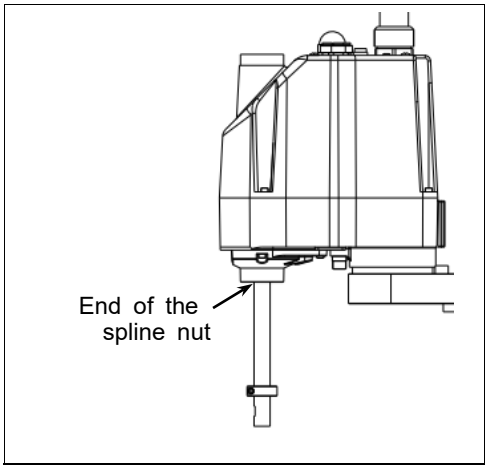

2.4 Tightening Hexagon Socket Head Cap Bolts

Hexagon socket head cap bolts are used in places where mechanical strength is required. (A hexagon socket head cap bolt will be called a “bolt” in this manual.) These bolts are fastened with the tightening torques shown in the following table.

When it is necessary to refasten these bolts in some procedures in this manual (except special cases as noted), use a torque wrench so that the bolts are fastened with the appropriate tightening torques as shown below.

Bolt	Tightening Torque
M3	2.0 ± 0.1 N·m (21 ± 1 kgf·cm)
M4	4.0 ± 0.2 N·m (41 ± 2 kgf·cm)
M5	8.0 ± 0.4 N·m (82 ± 4 kgf·cm)
M6	13.0 ± 0.6 N·m (133 ± 6 kgf·cm)
M8	32.0 ± 1.6 N·m (326 ± 16 kgf·cm)
M10	58.0 ± 2.9 N·m (590 ± 30 kgf·cm)
M12	100.0 ± 5.0 N·m (1,020 ± 51 kgf·cm)

Refer below for the set screw.

Set Screw	Tightening Torque
M4	2.4 ± 0.1 N·m (26 ± 1 kgf·cm)
M5	3.9 ± 0.2 N·m (40 ± 2 kgf·cm)

We recommend that the bolts aligned on a circumference should be fastened in a crisscross pattern as shown in the figure below.

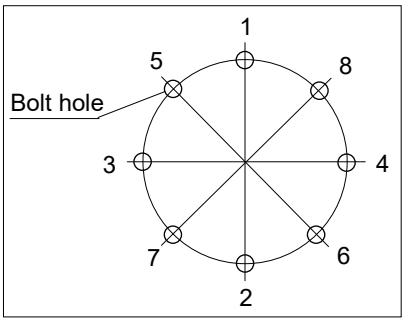

Do not fasten all bolts securely at one time. Divide the number of times that the bolts are fastened into two or three and fasten the bolts securely with a hexagonal wrench. Then, use a torque wrench so that the bolts are fastened with tightening torques shown in the table above.

3. Regular Inspection for G6 Manipulator

3.1 Maintenance Inspection

3.1.1 Schedule for Maintenance Inspection

Inspection points are divided into five stages: daily, monthly, quarterly, biannual, and annual. The inspection points are added every stage.
If the Manipulator is operated for 250 hours or longer per month, the inspection points must be added every 250 hours, 750 hours, 1500 hours, and 3000 hours operation.

	Inspection Point					
	Daily inspection	Monthly inspection	Quarterly inspection	Biannual inspection	Annual inspection	Overhaul (replacement)
1 month (250 h)	Inspect every day	√				
2 months (500 h)		√				
3 months (750 h)		√	√			
4 months (1000 h)		√				
5 months (1250 h)		√				
6 months (1500 h)		√	√	√		
7 months (1750 h)		√				
8 months (2000 h)		√				
9 months (2250 h)		√	√			
10 months (2500 h)		√				
11 months (2750 h)		√				
12 months (3000 h)		√	√	√	√	
13 months (3250 h)		√				
⋮	⋮	⋮	⋮	⋮	⋮	⋮
20000 h						√

* Overhaul (parts replacement)

3.1.2 Inspection Point

Inspection Item

Inspection Point	Inspection Place	Daily	Monthly	Quarterly	Biannual	Annual
Check looseness or backlash of bolts/screws.	End effector mounting bolts	√	√	√	√	√
	Manipulator mounting bolts	√	√	√	√	√
Check looseness of connectors.	External connectors on Manipulator (on the connector plates etc.)	√	√	√	√	√
Visually check for external defects. Clean up if necessary.	External appearance of Manipulator	√	√	√	√	√
	External cables		√	√	√	√
Check for bends or improper location. Repair or place it properly if necessary.	Safeguard etc.	√	√	√	√	√
Check the brake operation	Joint #3	√	√	√	√	√
Check whether unusual sound or vibration occurs.	Whole	√	√	√	√	√

Inspection Method

Inspection Point	Inspection Method
Check looseness or backlash of bolts/screws.	Use a hexagonal wrench to check that the end effector mounting bolts and the Manipulator mounting bolts are not loose. When the bolts are loose, refer to *"3.4 Tightening Hexagon Socket Head Bolts*" and tighten them to the proper torque.
Check looseness of connectors.	Check that connectors are not loose. When the connectors are loose, reattach it not to come off.
Visually check for external defects. Clean up if necessary.	Check the appearance of the Manipulator and clean up if necessary. Check the appearance of the cable, and if it is scratched, check that there is no cable disconnection.
Check for bends or improper location. Repair or place it properly if necessary.	Check that the safeguard, etc. are located properly. If the location is improper, place it properly.
Check the brake operation	Check that the shaft does not fall when in MOTOR OFF. If the shaft falls when in MOTOR OFF and the brake is not released, contact the supplier. Also, if the break is not released even operated release the break, contact the supplier.
Check whether unusual sound or vibration occurs.	Check that there is no unusual sound or vibration when operating. If there is something wrong, contact the supplier.

3.2 Overhaul (Parts Replacement)

Overhaul (replacement) shall be performed by personnel who has taken a proper training.
For details, refer to *Safety Manual Training*.
For details of overhaul, refer to *Maintenance Manual.*

3.3 Greasing

The ball screw spline and reduction gear units need greasing regularly. Only use the grease specified in the following table.

CAUTION	■ Keep enough grease in the Manipulator. Operating the Manipulator with insufficient grease will damage sliding parts and/or result in insufficient function of the Manipulator. Once the parts are damaged, a lot of time and money will be required for the repairs.

CAUTION	■ If grease gets into your eyes, mouth, or on your skin, follow the instructions below. If grease gets into your eyes : Flush them thoroughly with clean water, and then see a doctor immediately. If grease gets into your mouth : If swallowed, do not induce vomiting. See a doctor immediately. : If grease just gets into your mouth, wash out your mouth with water thoroughly. If grease gets on your skin : Wash the area thoroughly with soap and water.

	Greasing part	Greasing Interval	Grease	How to grease
Joint #1, Joint #2	Reduction gear units	Overhaul timing	-	Greasing shall be performed by personnel who has taken a proper training. For details, refer to the G series Manipulator Maintenance Manual.
Joint #3	Ball screw spline unit	At 100 km of operation (50 km for first greasing)	AFB	*Greasing the Ball Screw Spline Unit*

Joint #3 Ball screw spline unit

The recommended greasing interval is at 100 Km of operation. However, greasing timing also can be checked from the grease condition. Perform greasing if the grease is discolored or becomes dry.

Normal grease

Discolored grease

Perform greasing at 50 km of operation for the first time of greasing.

NOTE ☞ For EPSON RC+ 7.0 Ver. 7.2.x or later (firmware Ver.7.2.x.x or later), the recommended replacement time for the grease on the ball screw spline unit can be checked in the [Maintenance] dialog box of EPSON RC+ 7.0.
For details, refer to the following manual.
Robot Controller RC700 series "Maintenance Manual 6. Alarm"

Greasing the Ball Screw Spline Unit

	Name	Quantity	NOTE
Grease	For Ball Screw Spline Unit (AFB grease)	Proper quantity	
Tools	Wiping cloth	1	For wiping grease (Spline shaft)
	Cross-point screwdriver	1	

NOTE ☞ Cover the surrounding area such as the end effector and peripheral equipment in case the grease drips.

(1) Turn ON the Controller.

(2) Move the shaft to the lower limit by using one of the following methods:

- Move the shaft to the lower limit manually while pressing the brake release switch.

NOTE ☞ Be careful of the shaft falling and rotating while the brake release switch is being pressed because the shaft may be lowered by the weight of the end effector.

- Move the shaft to the lower limit manually while by selecting EPSON RC+ 7.0 menu - [Tools] - [Robot Manager] - [Jog & Teach].

NOTE ☞ Be sure to keep enough space and prevent the end effector hitting any peripheral equipment.

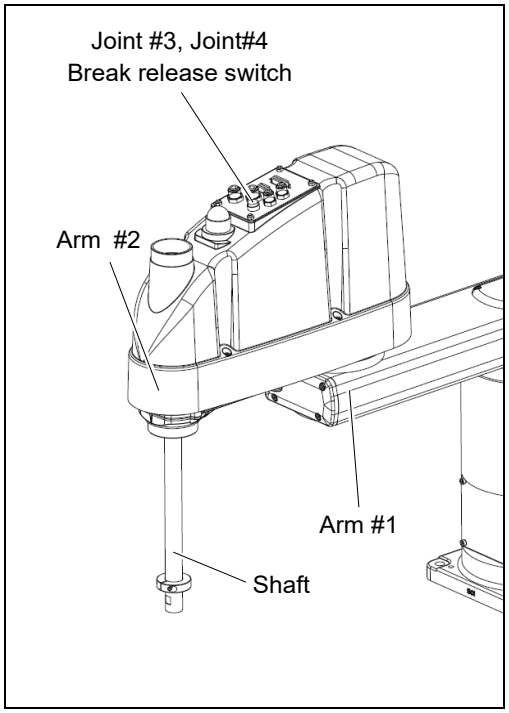

(3) Turn OFF the Controller.

(4) Wipe off the old grease from the shaft, and then apply new grease to it.

Grease application range is from the end of the spline nut to mechanical stop.

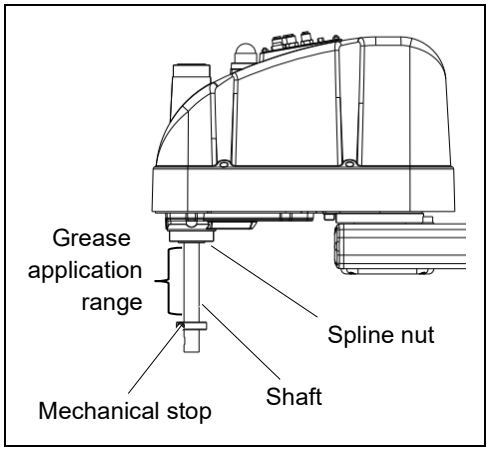

(5) Apply new grease evenly to the spiral groove of the ball screw spline unit and the vertical groove so that the groove is filled.

Grease application example

(6) Turn ON the Controller.

(7) Start the robot manager and move the shaft to the origin position. Be careful not to hit peripheral equipment.

(8) After moving to the origin position, reciprocate the shaft. The reciprocating operation is a low power mode operation program that performs from the upper limit to the lower limit. Run for about 5 minutes to spread the grease over the shaft.

(9) Turn OFF the controller.

(10) Wipe off excess grease on the end of the spline nut and mechanical stop.

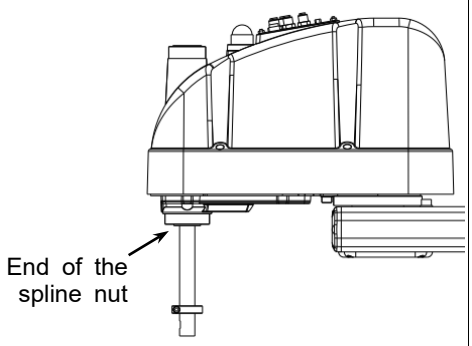

3.4 Tightening Hexagon Socket Head Cap Bolts

Hexagon socket head cap bolts are used in places where mechanical strength is required. (A hexagon socket head cap bolt will be called a “bolt” in this manual.) These bolts are fastened with the tightening torques shown in the following table.

When it is necessary to refasten these bolts in some procedures in this manual (except special cases as noted), use a torque wrench so that the bolts are fastened with the appropriate tightening torques as shown below.

Bolt	Tightening Torque
M3	2.0 ± 0.1 N·m (21 ± 1 kgf·cm)
M4	4.0 ± 0.2 N·m (41 ± 2 kgf·cm)
M5	8.0 ± 0.4 N·m (82 ± 4 kgf·cm)
M6	13.0 ± 0.6 N·m (133 ± 6 kgf·cm)
M8	32.0 ± 1.6 N·m (326 ± 16 kgf·cm)
M10	58.0 ± 2.9 N·m (590 ± 30 kgf·cm)
M12	100.0 ± 5.0 N·m (1,020 ± 51 kgf·cm)

Refer below for the set screw.

Set Screw	Tightening Torque
M4	2.4 ± 0.1 N·m (26 ± 1 kgf·cm)
M5	3.9 ± 0.2 N·m (40 ± 2 kgf·cm)

The bolts aligned on a circumference should be fastened in a crisscross pattern as shown in the figure below.

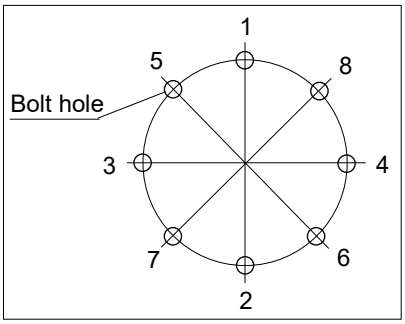

Do not fasten all bolts securely at one time. Divide the number of times that the bolts are fastened into two or three and fasten the bolts securely with a hexagonal wrench. Then, use a torque wrench so that the bolts are fastened with tightening torques shown in the table above.

4. Regular Inspection for G10/G20 Manipulator

4.1 Maintenance Inspection

4.1.1 Schedule for Maintenance Inspection

Inspection points are divided into five stages: daily, monthly, quarterly, biannual, and annual. The inspection points are added every stage.
If the Manipulator is operated for 250 hours or longer per month, the inspection points must be added every 250 hours, 750 hours, 1500 hours, and 3000 hours operation.

	Inspection Point					
	Daily inspection	Monthly inspection	Quarterly inspection	Biannual inspection	Annual inspection	Overhaul (replacement)
1 month (250 h)	Inspect every day	√				
2 months (500 h)		√				
3 months (750 h)		√	√			
4 months (1000 h)		√				
5 months (1250 h)		√				
6 months (1500 h)		√	√	√		
7 months (1750 h)		√				
8 months (2000 h)		√				
9 months (2250 h)		√	√			
10 months (2500 h)		√				
11 months (2750 h)		√				
12 months (3000 h)		√	√	√	√	
13 months (3250 h)		√				
⋮	⋮	⋮	⋮	⋮	⋮	⋮
20000 h						√

* Overhaul (parts replacement)

4.1.2 Inspection Point

Inspection Item

Inspection Point	Inspection Place	Daily	Monthly	Quarterly	Biannual	Annual
Check looseness or backlash of bolts/screws.	End effector mounting bolts	√	√	√	√	√
	Manipulator mounting bolts	√	√	√	√	√
Check looseness of connectors.	External connectors on Manipulator (on the connector plates etc.)	√	√	√	√	√
Visually check for external defects. Clean up if necessary.	External appearance of Manipulator	√	√	√	√	√
	External cables		√	√	√	√
Check for bends or improper location. Repair or place it properly if necessary.	Safeguard etc.	√	√	√	√	√
Check the brake operation	Joint #3	√	√	√	√	√
Check whether unusual sound or vibration occurs.	Whole	√	√	√	√	√

Inspection Method

Inspection Point	Inspection Method
Check looseness or backlash of bolts/screws.	Use a hexagonal wrench to check that the end effector mounting bolts and the Manipulator mounting bolts are not loose. When the bolts are loose, refer to *"4.4 Tightening Hexagon Socket Head Bolts*" and tighten them to the proper torque.
Check looseness of connectors.	Check that connectors are not loose. When the connectors are loose, reattach it not to come off.
Visually check for external defects. Clean up if necessary.	Check the appearance of the Manipulator and clean up if necessary. Check the appearance of the cable, and if it is scratched, check that there is no cable disconnection.
Check for bends or improper location. Repair or place it properly if necessary.	Check that the safeguard, etc. are located properly. If the location is improper, place it properly.
Check the brake operation	Check that the shaft does not fall when in MOTOR OFF. If the shaft falls when in MOTOR OFF and the brake is not released, contact the supplier. Also, if the break is not released even operated release the break, contact the supplier.
Check whether unusual sound or vibration occurs.	Check that there is no unusual sound or vibration when operating. If there is something wrong, contact the supplier.

4.2 Overhaul (Parts Replacement)

Overhaul (replacement) shall be performed by personnel who has taken a proper training.
For details, refer to *Safety Manual Training*.
For details of overhaul, refer to *Maintenance Manual.*

4.3 Greasing

The ball screw spline and reduction gear units need greasing regularly. Only use the grease specified in the following table.

CAUTION	■ Keep enough grease in the Manipulator. Operating the Manipulator with insufficient grease will damage sliding parts and/or result in insufficient function of the Manipulator. Once the parts are damaged, a lot of time and money will be required for the repairs.

CAUTION	■ If grease gets into your eyes, mouth, or on your skin, follow the instructions below. If grease gets into your eyes : Flush them thoroughly with clean water, and then see a doctor immediately. If grease gets into your mouth : If swallowed, do not induce vomiting. See a doctor immediately. : If grease just gets into your mouth, wash out your mouth with water thoroughly. If grease gets on your skin : Wash the area thoroughly with soap and water.

	Greasing part	Greasing Interval	Grease	How to grease
Joint #1, Joint #2	Reduction gear units	Overhaul timing	-	Greasing shall be performed by personnel who has taken a proper training. For details, refer to the G series Manipulator Maintenance Manual.
Joint #3	Ball screw spline unit	At 100 km of operation (50 km for first greasing)	AFB	*Greasing the Ball Screw Spline Unit*

Joint #3 Ball screw spline unit

The recommended greasing interval is at 100 Km of operation. However, greasing timing also can be checked from the grease condition. Perform greasing if the grease is discolored or becomes dry.

Normal grease

Discolored grease

Perform greasing at 50 km of operation for the first time of greasing.

NOTE ☞ For EPSON RC+ 7.0 Ver. 7.2.x or later (firmware Ver.7.2.x.x or later), the recommended replacement time for the grease on the ball screw spline unit can be checked in the [Maintenance] dialog box of EPSON RC+ 7.0.
For details, refer to the following manual.
Robot Controller RC700 series "Maintenance Manual 6. Alarm"

Greasing the Ball Screw Spline Unit

	Name	Quantity	NOTE
Grease	For Ball Screw Spline Unit (AFB grease)	Proper quantity	
Tools	Wiping cloth	1	For wiping grease (Spline shaft)
	Cross-point screwdriver	1	

NOTE ☞ Cover the surrounding area such as the end effector and peripheral equipment in case the grease drips.

(1) Turn ON the Controller.

(2) Move the shaft to the lower limit by using one of the following methods:

- Move the shaft to the lower limit manually while pressing the brake release switch.

NOTE ☞ Be careful of the shaft falling and rotating while the brake release switch is being pressed because the shaft may be lowered by the weight of the end effector.

- Move the shaft to the lower limit manually while by selecting EPSON RC+ 7.0 menu - [Tools] - [Robot Manager] - [Jog & Teach].

NOTE ☞ Be sure to keep enough space and prevent the end effector hitting any peripheral equipment.

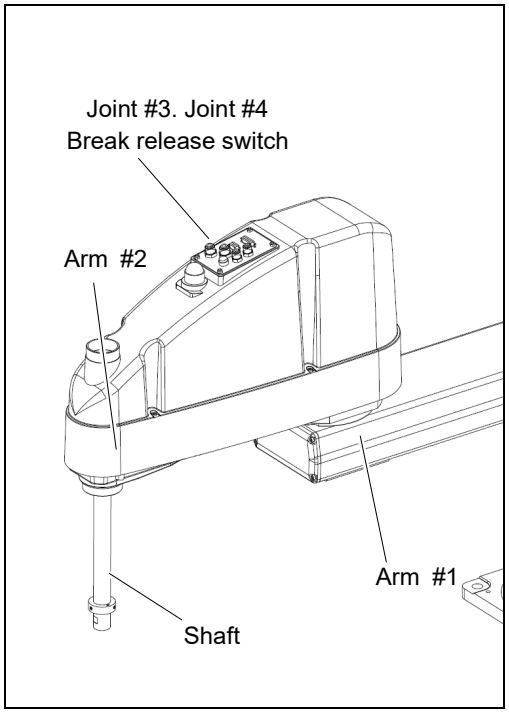

(3) Turn OFF the Controller.

(4) Wipe off the old grease from the shaft, and then apply new grease to it.

Grease application range is from the end of the spline nut to mechanical stop.

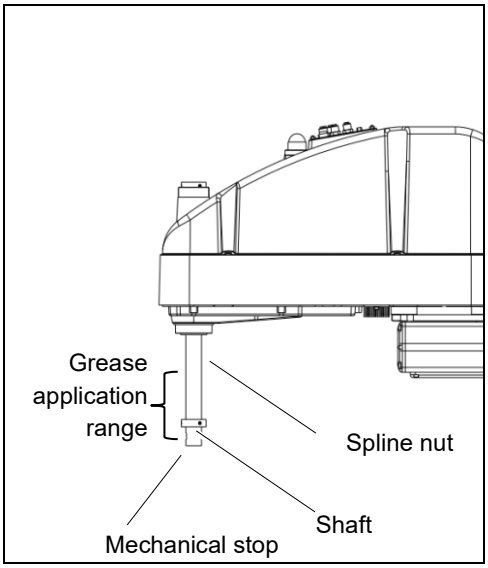

(5) Apply new grease evenly to the spiral groove of the ball screw spline unit and the vertical groove so that the groove is filled.

Grease application example

(6) Turn ON the Controller.

(7) Start the robot manager and move the shaft to the origin position. Be careful not to hit peripheral equipment.

(8) After moving to the origin position, reciprocate the shaft. The reciprocating operation is a low power mode operation program that performs from the upper limit to the lower limit. Run for about 5 minutes to spread the grease over the shaft.

(9) Turn OFF the controller.

(10) Wipe off excess grease on the end of the spline nut and mechanical stop.

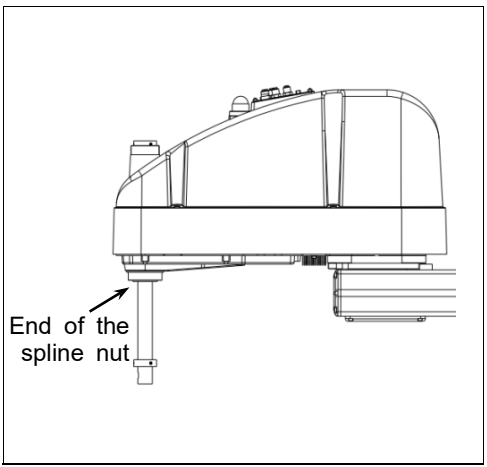

4.4 Tightening Hexagon Socket Head Cap Bolts

Hexagon socket head cap bolts are used in places where mechanical strength is required. (A hexagon socket head cap bolt will be called a “bolt” in this manual.) These bolts are fastened with the tightening torques shown in the following table.

When it is necessary to refasten these bolts in some procedures in this manual (except special cases as noted), use a torque wrench so that the bolts are fastened with the appropriate tightening torques as shown below.

Bolt	Tightening Torque
M3	2.0 ± 0.1 N·m (21 ± 1 kgf·cm)
M4	4.0 ± 0.2 N·m (41 ± 2 kgf·cm)
M5	8.0 ± 0.4 N·m (82 ± 4 kgf·cm)
M6	13.0 ± 0.6 N·m (133 ± 6 kgf·cm)
M8	32.0 ± 1.6 N·m (326 ± 16 kgf·cm)
M10	58.0 ± 2.9 N·m (590 ± 30 kgf·cm)
M12	100.0 ± 5.0 N·m (1,020 ± 51 kgf·cm)

Refer below for the set screw.

Set Screw	Tightening Torque
M4	2.4 ± 0.1 N·m (26 ± 1 kgf·cm)
M5	3.9 ± 0.2 N·m (40 ± 2 kgf·cm)

We recommend that the bolts aligned on a circumference should be fastened in a crisscross pattern as shown in the figure below.

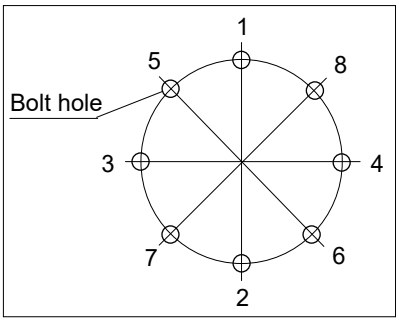

Do not fasten all bolts securely at one time. Divide the number of times that the bolts are fastened into two or three and fasten the bolts securely with a hexagonal wrench. Then, use a torque wrench so that the bolts are fastened with tightening torques shown in the table above.

Appendix

This volume describes the specifications table for each model and detailed data of stopping time and stopping distance.

Appendix A: Specifications

G1 Specifications

Item		4-axis spec		3-axis spec	
		G1-171*	G1-221*	G1-171*	G1-221*
Mounting type		Table Top			
Arm length #1, #2	Arm #1, #2	175 mm	225 mm	175 mm	225 mm
	Arm #1	75 mm	125 mm	75 mm	125 mm
	Arm #2	100 mm		100 mm	
Weight (cables not included)		8 kg		8 kg	
Driving method	All joints	AC servo motor			
Max. operating speed *1	Joints #1, #2	2630 mm/s	3000 mm/s	2630 mm/s	3000 mm/s
	Joints #3 (Z)	1200 mm/s		1200 mm/s	
	Joints #4 (U)	3000 deg./s		-	
Repeatability	Joints #1, #2	± 0.005 mm	± 0.008 mm	± 0.005 mm	± 0.008 mm
	Joints #3 (Z)	± 0.01 mm		± 0.01 mm	
	Joints #4 (U)	± 0.01 deg.		-	
Max. motion range	Joints #1	± 125 deg.		± 125 deg.	
	Joints #2 (Cleanroom model)	± 140 deg. (± 140 deg.)	± 152 deg. (± 149 deg.)	± 135 deg. (± 123 deg.)	± 135 deg. (± 132 deg.)
	Z stroke (Cleanroom model)	± 100 (80) mm		± 100 (80) mm	
	Joints #4	± 360 deg.		-	
Max. pulse range (pulse)	Joints #1	– 1019449 ~ 6262329 pulse			
	Joints #2 (Cleanroom model)	± 2548623 (± 2548623)	± 2767076 (± 2712463)	± 2457600 (± 2239147)	± 2457600 (± 2402987)
	Joints #3 (Cleanroom model)	– 1092267 ~ 0 (– 873813 ~ 0)			
	Joints #4	– 393216 ~ 393216			
Resolution	Joints #1	3.43322E-05 deg./pulse			
	Joints #2	5.49316E-05 deg./pulse			
	Joints #3	9.15527E-05 mm/pulse			
	Joints #4	9.15527E-04 deg./pulse			
Motor rated capacity		All joints: 50 W			
Payload	Rated	0.5 kg		0.5 kg	
	Maximum	1 kg		1.5 kg	
Joint #4 allowable moment of inertia *2	Rated	0.0003 kg·m^2		-	
	Maximum	0.004 kg·m^2		-	
Shaft diameter		ø 8 mm			
Mounting hole		125×88 (4-M6)			
Joint #3 down force		50 N			
Installed wire for customer use		24 pin (9+15)			
Installed pneumatic tube for customer use		1 pneumatic tube (ø 4 mm): 0.59 MPa (6 kgf/cm^2 : 86 psi) 2 pneumatic tubes (ø 6 mm): 0.59 MPa (6 kgf/cm^2 : 86 psi)			
Environmental requirements *3	Ambient temperature	5 to 40 °C			
	Ambient relative humidity	10 to 80 % RH (no condensation)			
	Vibration level	4.9 m/s^2 (0.5 G) or less			
Noise level *4		L_{Aeq} = 70 dB or under			
Installation environment		Standard, Cleanroom + ESD (ISO Class 3) *5			
Applicable Controller		RC700-A			

Item		4-axis spec		3-axis spec	
		G1-171*	G1-221*	G1-171*Z	G1-221*Z
Assignable Value ( ) Default values	Speed	1 ~ (5) ~ 100			
	Accel *6	1 ~ (10) ~ 120			
	SpeedS	1 ~ (50) ~ 2000			
	AccelS	1 ~ (200) ~ 25000			
	Fine	0 ~ (10000) ~ 65535			
	Weight	0,100 ~ (0.5,100) ~ 1,100		0,100 ~ (0.5,100) ~ 1.5,100	
Safety standard		CE Marking EMC Directive, Machinery Directive, RoHS Directive UKCA Marking EMC Regulations, Machinery Regulations, RoHS Regulations KC Marking / KCs Marking UL standards UL1740, CAN/CSA-Z434			

*1: In the case of PTP command. Maximum operating speed for CP command is 2000 mm/s on horizontal plane.

*2: In the case where the center of gravity is at the center of Joint #4. If the center of gravity is not at the center of Joint #4, set the parameter using Inertia command.

*3: When the product is used in a low temperature environment around the minimum temperature of the product specification, or when the product is suspended for a long time on holidays or at night, a collision detection error may occur due to the large resistance of the drive unit immediately after the start of operation. In such a case, it is recommended to warm up for about 10 minutes.

*4: Conditions of Manipulator during measurement as follows:

Operating conditions : Under rated load, 4-joints simultaneous motion, maximum speed, maximum acceleration/deceleration, and duty 50%.

Measurement point : Rear of the Manipulator, 1000 mm apart from the motion range, 50 mm above the base-installed surface.

*5: The exhaust system in the Cleanroom-model Manipulator draws air from the base interior and arm cover interior.

A crack or other opening in the base unit can cause loss of negative air pressure in the outer part of the arm, which can cause increased dust emission.

Seal firmly the exhaust port and the exhaust tube with vinyl tape.

If the exhaust flow is not sufficient, dust particle emission may exceed the specified maximum level.

Cleanliness level: Class ISO 3 (ISO14644-1)

Exhaust System : Exhaust port : Inner diameter: ø8 mm

Exhaust tube : Polyurethane tube

Outer diameter ø8 mm

or Inner diameter ø16mm or larger

Recommended exhaust flow rate: approx. 1000 cm^3/s (Normal)

ESD specification uses resin materials with antistatic treatment. This model controls adhesion of dust due to electrifications.

*6: In general use, Accel setting 100 is the optimum setting that maintains the balance of acceleration and vibration when positioning. Although values larger than 100 can be set to Accel, it is recommended to minimize the use of large values to necessary motions since operating the manipulator continuously with the large Accel setting may shorten the product life remarkably.

G3 Specifications

Item		G3 series Manipulator		
Arm length	Arm #1, #2	250 mm	300 mm	350 mm
	Arm #1	120 mm	170 mm	220 mm
	Arm #2	130 mm	130 mm	130 mm
Max. operating speed *1	Joints #1, #2	3550 mm/s	3950 mm/s	4350 mm/s
	Joint #3	1100 mm/s		
	Joint #4	3000 deg/s		
Repeatability	Joints #1, #2	± 0.008 mm	± 0.01 mm	± 0.01 mm
	Joint #3	± 0.01 mm		
	Joint #4	± 0.005 deg		
Payload (Load)	Rated	1 kg		
	Max.	3 kg		
Joint #4 allowable moment of inertia *2	Rated	0.005 kg·m^2		
	Max.	0.05 kg·m^2		
Resolution	Joints #1	0.0000343323 deg/pulse		
	Joint #2	0.0000549316 deg/pulse		
	Joint #3	0.0000878906 mm/pulse		
	Joint #4	0.000240928 deg/pulse		
Hand	Shaft diameter	ø 16 mm		
	Through hole	ø 11mm		
Mounting hole	Table top mounting	120 × 120 mm (4-M8)		
	Multiple mounting	Wall mounting : 174 × 70 mm (4-M8)		
		Ceiling mounting : 120 × 120 mm (4-M8) / custom specification		
Weight (cables not included)		14 kg : 31 lb.		
Driving method	All joints	AC servo motor		
Motor rated capacity	Joint #1	200 W		
	Joint #2	150 W		
	Joint #3	150 W		
	Joint #4	150 W		
Option	Installation method	-	Multiple Mounting	
	Installation environment	Cleanroom & ESD *3		
Joint #3 down force		150 N		
Installed wire for customer use		15 (15 pin: D-sub) 15 cores		
Installed pneumatic tube for customer use		2 pneumatic tubes (ø6 mm) : 0.59 MPa (6 kgf/cm^2 : 86 psi)		
		1 pneumatic tubes (ø4 mm) : 0.59 MPa (6 kgf/cm^2 : 86 psi)		
Environmental requirements *4	Ambient Temp.	5 to 40°C		
	Ambient relative humidity	10 to 80% (no condensation)		
Noise level *5		L_{Aeq} = 70 dB (A) or under		
Applicable Controller *6		RC700-A		
Assignable Value ( ) Default values	SPEED	1 to (5) to100		
	ACCEL *7	1 to (10) to 120		
	SPEEDS	1 to (50) to 2000		
	ACCELS	1 to (200) to 25000		
	FINE	0 to (10000) to 65535		
	WEIGHT	0,130 to (1,130) 3,130		
Safety standard		CE Marking EMC Directive, Machinery Directive, RoHS Directive UKCA Marking EMC Regulations, Machinery Regulations, RoHS Regulations KC Marking / KCs Marking UL standards UL1740, CAN/CSA-Z434		

Max. motion range (deg) (mm) / Max. pulse range (pulse)

Standard-model, Table Top Mounting

Item				G3-251S	G3-301S-*	G3-351S-*
Max. motion range (deg), (mm)	Straight	Joint #1		± 140		
		Joint #2		± 141	± 142	
	Curved	Joint #1	Right hand	-	– 125 to 150	– 110 to 165
			Left hand	-	– 150 to 125	– 165 to 110
		Joint #2	Right hand	-	– 135 to 150	– 120 to 165
			Left hand	-	– 150 to 135	– 165 to 120
	Common	Joint #3		150 mm		
		Joint #4		± 360		
Max. pulse range (pulse)	Straight	Joint #1		– 1456356 to 6699236		
		Joint #2		± 2566827	± 2585032	
	Curved	Joint #1	Right hand	-	– 1019449 to 6990507	– 582543 to 7427414
			Left hand	-	– 1747627 to 6262329	– 2184534 to 5825423
		Joint #2	Right hand	-	– 2457600 to 2730667	– 2184534 to 3003734
			Left hand	-	– 2730667 to 2457600	– 3003734 to 2184534
	Common	Joint #3		–1706667 to 0		
		Joint #4		± 1494221		

Standard-model / Multiple Mounting

Item				G3-301SM	G3-351SM-*
Max. motion range (deg), (mm)	Straight	Joint #1		± 115	± 120
		Joint #2		± 135	± 142
	Curved	Joint #1	Right hand	-	– 105 to 130
			Left hand	-	– 130 to 105
		Joint #2	Right hand	-	– 120 to 160
			Left hand	-	– 160 to 120
	Common	Joint #3		150 mm	
		Joint #4		± 360	
Max. pulse range (pulse)	Straight	Joint #1		– 728178 to 5971058	– 873814 to 6116694
		Joint #2		± 2457600	± 2585032
	Curved	Joint #1	Right hand	-	– 436907 to 6407965
			Left hand	-	– 1165085 to 5679787
		Joint #2	Right hand	-	– 2184534 to 2912712
			Left hand	-	– 2912712 to 2184534
	Common	Joint #3		–1706667 to 0	
		Joint #4		± 1494221	

Cleanroom-model, Table Top Mounting

Item				G3-251C	G3-301C-*	G3-351C-*
Max. motion range (deg), (mm)	Straight	Joint #1		± 140		
		Joint #2		± 137	± 141	± 142
	Curved	Joint #1	Right hand	-	– 125 to 150	– 110 to 165
			Left hand	-	– 150 to 125	– 165 to 110
		Joint #2	Right hand	-	– 135 to 145	– 120 to 160
			Left hand	-	– 145 to 135	– 160 to 120
	Common	Joint #3		120 mm		
		Joint #4		± 360		
Max. pulse range (pulse)	Straight	Joint #1		– 1456356 to 6699236		
		Joint #2		± 2494009	± 2566827	± 2585032
	Curved	Joint #1	Right hand	-	– 1019449 to 6990507	– 582543 to 7427414
			Left hand	-	– 1747627 to 6262329	– 2184534 to 5825423
		Joint #2	Right hand	-	– 2457600 to 2639645	– 2184534 to 2912712
			Left hand	-	– 2639645 to 2457600	– 2912712 to 2184534
	Common	Joint #3		– 1365334 to 0		
		Joint #4		± 1494221		

Cleanroom-model, Multiple Mounting

Item				G3-301CM	G3-351CM-*
Max. motion range (deg), (mm)	Straight	Joint #1		± 115	± 120
		Joint #2		± 135	± 142
	Curved	Joint #1	Right hand	-	– 105 to 130
			Left hand	-	– 130 to 105
		Joint #2	Right hand	-	– 120 to 150
			Left hand	-	– 150 to 120
	Common	Joint #3		120 mm	
		Joint #4		± 360	
Max. pulse range (pulse)	Straight	Joint #1		– 728178 to 5971058	– 873814 to 6116694
		Joint #2		± 2457600	± 2585032
	Curved	Joint #1	Right hand	-	– 436907 to 6407965
			Left hand	-	– 1165085 to 5679787
		Joint #2	Right hand	-	– 2184534 to 2730667
			Left hand	-	– 2730667 to 2187534
	Common	Joint #3		–1365334 to 0	
		Joint #4		± 1494221	

*1: In the case of PTP command.
Maximum operating speed for CP command is 2000 mm/s on horizontal plane.

*2: In the case where the center of gravity is at the center of Joint #4.
If the center of gravity is not at the center of Joint #4, set the parameter using Inertia command.

*3: The exhaust system in the Cleanroom-model Manipulator draws air from the base interior and arm cover interior together.
A crack or other opening in the base unit can cause loss of negative air pressure in the outer part of the arm, which can cause increased dust emission.
Do not remove the maintenance cover on the front of the base.
Seal the exhaust port and the exhaust tube with vinyl tape so that the joint is airtight.
If the exhaust flow is not sufficient, dust particle emission may exceed the specified maximum level.

Cleanliness level : Class ISO 3 (ISO14644-1)
Exhaust System : Exhaust port diameter : Inner diameter: ø12 mm / Outer diameter: ø16 mm
Exhaust tube : Polyurethane tube
Outer diameter: ø12 mm (Inner diameter:ø8 mm) or
Inner diameter ø16mm or larger
Recommended exhaust flow rate : approx. 1000 cm^3/s (Normal)

ESD specification uses resin materials with antistatic treatment. This model controls adhesion of dust due to electrification.

*4: When the product is used in a low temperature environment around the minimum temperature of the product specification, or when the product is suspended for a long time on holidays or at night, a collision detection error may occur due to the large resistance of the drive unit immediately after the start of operation. In such a case, it is recommended to warm up for about 10 minutes.

*5: Conditions of Manipulator during measurement as follows:
Operating conditions : Under rated load, 4-joints simultaneous motion, maximum speed, maximum acceleration/deceleration, and duty 50%.
Measurement point : Rear of the Manipulator, 1000 mm apart from the motion range, 50 mm above the base-installed surface.

*6: For delivery up until January 2017, there are systems in combination of G series and RC620.

*7: In general use, Accel setting 100 is the optimum setting that maintains the balance of acceleration and vibration when positioning. Although values larger than 100 can be set to Accel, it is recommended to minimize the use of large values to necessary motions since operating the manipulator continuously with the large Accel setting may shorten the product life remarkably.

G6 Specifications

Item			G6-****	G6-****R	G6-****W
Mount method			Table Top	Ceiling	Wall
Environment			Cleanroom-model + ESD *1, Protected-model *2		
Arm length	Arm #1, #2	45	450 mm		
		55	550 mm		
		65	650 mm		
	Arm #3	1	180 mm : G6-**1S*, D* 150 mm : G6-**1C*, P*, D* with bellows option		
		3	330 mm : G6-**3S*, D* 300 mm : G6-**3C*, P*, D* with bellows option		
Weight (not include the weight of cables)		45, 55	27 kg : 60 lb.		29 kg : 64 lb.
		65	28 kg : 62 lb.		29.5 kg : 65 lb.
Driving method	All joints		AC servo motor		
Max. operating speed *3	Joints #1, #2	45	6440 mm/s		
		55	7170 mm/s		
		65	7900 mm/s		
	Joint #3	1	1100 mm/s		
		3	2350 mm/s		
	Joint #4		2400 deg/s		
Repeatability	Joints #1, #2		±0.015 mm		
	Joint #3		±0.010 mm		
	Joint #4		±0.005 deg		
Max. motion range	Joint #1	45	±152 deg	±120 deg	±105 deg
		55		±152 deg	±135 deg
		65			±148 deg
	Joint #2	45	±142 to 147.5 deg *a	±130 deg	
		55	±147.5 deg	±147.5 deg : S	
				±145 deg : C*, P*, D* with bellows option	
		65	±147.5 deg		
	Joint #3	1	180 mm : G6-**1S*, D* 150 mm : G6-**1C*, P*, D* with bellows option		
		3	330 mm : G6-**3S*, D* 300 mm : G6-**3C*, P*, D* with bellows option		
	Joint #4		±360 deg		
Max. pulse range (pulse)	Joint #1	45	−1805881 to +7048761	−873814 to + 6116694	−436907 to +5679787
		55		−1805881 to +7048761	−1310720 to +6553600
		65			−1689373 to +6932253
	Joint #2	45	±2585031 to 2685156 *a	±2366578	
		55	±2685156	±2685156 : S	
				±2639645 : C*, P*, D* with bellows option	
		65	±2685156		
	Joint #3	1	−1976708 : G6-**1S*, D* −1647257 : G6-**1C*, P*, D with bellows option		
		3	−1811982 : G6-**3S*, D* −1647257 : G6-**3C*, P*, D* with bellows option		
	Joint #4		±1961226		

*a : G6-45*** Joint #2

		Max. motion range	Max. pulse range
G6-45*S* / D*	Z 0 to –270	147.5 deg	±2685156 pulse
	Z –270 to –330	145 deg	±2639645 pulse
G6-45*C*/ P* / D* with bellows option	Z 0 to –240	147.5 deg	±2685156 pulse
	Z –240 to –300	142 deg	±2585031 pulse

Item			G6-*****
Resolution	Joint #1		0.0000343 deg/pulse
	Joint #2		0.0000549 deg/pulse
	Joint #3	1	0.0000911 mm/pulse
		3	0.0001821 mm/pulse
	Joint #4		0.0001836 deg/pulse
Motor rated capacity	Joint #1		400 W
	Joint #2		400 W
	Joint #3		200 W
	Joint #4		100 W
Payload	rated		3 kg
	max.		6 kg
Joint #4 allowable moment of inertia *4	rated		0.01 kg·m^2
	max.		0.12 kg·m^2
Hand	Shaft diameter		ø20 mm
	Through hole		ø14 mm
Joint #3 down force			150 N
Installed wire for customer use			24 (15 pin + 9 pin : D-sub)
Installed pneumatic tube for customer use			2 pneumatic tubes (ø6 mm) : 0.59 MPa (6 kgf/cm^2 : 86 psi)
			2 pneumatic tubes (ø4 mm) : 0.59 MPa (6 kgf/cm^2 : 86 psi)
Environmental requirements *5	Ambient Temperature		5 to 40°C
	Ambient relative humidity		10 to 80% (no condensation)
Noise level *6			L_{Aeq} = 70 dB(A) or under
Applicable Controller *7			RC700-A
Assignable Value ( ) Default values	SPEED		1 to (5) to100
	ACCEL *8		1 to (10) to 120
	SPEEDS		1 to (50) to 2000
	ACCELS		1 to (200) to 25000
	FINE		0 to (10000) to 65535
	WEIGHT		0,250 to (3,250) 6,250
Safety standard			CE Marking EMC Directive, Machinery Directive, RoHS Directive UKCA Marking EMC Regulations, Machinery Regulations, RoHS Regulations KC Marking / KCs Marking UL standards UL1740, CAN/CSA-Z434

*1: The exhaust system in the Cleanroom-model Manipulator (G6-***C*) draws air from the base interior and arm cover interior.
A crack or other opening in the base unit can cause loss of negative air pressure in the outer part of the arm, which can cause increased dust emission.
Do not remove the maintenance cover on the front of the base.
Seal the exhaust port and the exhaust tube with vinyl tape so that the joint is airtight.
If the exhaust flow is not sufficient, dust particle emission may exceed the specified maximum level.

Cleanliness level: Class ISO 3 (ISO14644-1)

Exhaust System : Exhaust port diameter : Inner diameter: ø12 mm / Outer diameter: ø16 mm
Exhaust tube : Polyurethane tube
Outer diameter: ø12 mm (Inner diameter:ø8 mm)
or Inner diameter ø16mm or larger
Recommended exhaust flow rate : Approx. 1000 cm^3/s (Normal)

ESD specification uses resin materials with antistatic treatment. This model controls adhesion of dust due to electrification.

*2: IP (International Protection) for the Protected-model Manipulator indicates International Standard of the protection level against dust and water.

Normal G6-***D* Manipulators do not have bellows. The normal G6-***D* Manipulator (without bellows option) operates under adverse conditions with oily mist.

If necessary, select the bellows option at shipment.

The Manipulators with bellows (option) comply with grade of protection IP54 (IEC 60529, JIS C0920).

Model	Degree of protection		
G6-***D* with bellows option	IP54	Dust : 5	Dust shall not ingress in a quantity to interfere with satisfactory operation of the equipment.
		Water: 4	Water splashing against the enclosure from any direction shall have no harmful effect.
G6-***P*	IP65	Dust : 6	No ingress of dust.
		Water: 5	Water projected by a nozzle against enclosure from any direction shall have no harmful effects.

*3: In the case of PTP command. Maximum operating speed for CP command is 2000 mm/s on horizontal plane.

*4: In the case where the center of gravity is at the center of Joint #4. If the center of gravity is not at the center of Joint #4, set the parameter using Inertia command.

*5: When the product is used in a low temperature environment around the minimum temperature of the product specification, or when the product is suspended for a long time on holidays or at night, a collision detection error may occur due to the large resistance of the drive unit immediately after the start of operation. In such a case, it is recommended to warm up for about 10 minutes.

*6: Conditions of Manipulator during measurement as follows:
Operating conditions : Under rated load, 4-joints simultaneous motion, maximum speed, maximum acceleration /deceleration, and duty 50%.
Measurement point : Rear of the Manipulator, 1000 mm apart from the motion range, 50 mm above the base-installed surface.

*7: For delivery in April, 2008 or earlier, there are systems in combination of G series and RC170.
For delivery up until January 2017, there are systems in combination of G series and RC620.

*8: In general use, Accel setting 100 is the optimum setting that maintains the balance of acceleration and vibration when positioning. Although values larger than 100 can be set to Accel, it is recommended to minimize the use of large values to necessary motions since operating the manipulator continuously with the large Accel setting may shorten the product life remarkably.

G10 / G20 Specifications

Item			G10/G20-****	G10/G20-****R	G10/G20-*****W
Mount method			Table Top	Ceiling	Wall
Environment			Cleanroom-model + ESD *1 / Protected-model *2		
Arm length	Arm #1, #2	65	650 mm (G10 only)		
		85	850 mm (G10/G20)		
		A0	1000 mm (G20 only)		
	Arm #3	1	180 mm : G10/G20-**1S*, D* 150 mm : G10/G20-**1C*, P*, D* with bellows option		
		4	420 mm : G10/G20-**4S*, D* 390 mm : G10/G20-**4C*, P*, D* with bellows option		
Weight (not include the weight of cables)	G10	65	46 kg : 102 lb		51 kg : 113 lb
	G10/G20	85	48 kg : 106 lb		53 kg : 117 lb
	G20	A0	50 kg : 111 lb		55 kg : 122 lb
Driving method	All joints		AC servo motor		
Max. operating speed *3	Joints #1, #2	65	8800 mm/s		
		85	11000 mm/s		
		A0	11500mm/s		
	Joint #3	1	1100 mm/s		
		4	2350 mm/s		
	Joint #4	G10	2400 deg/s		
		G20	1700 deg/s		
Repeatability	Joints #1, #2		±0.025 mm		
	Joint #3		±0.01 mm		
	Joint #4		±0.005 deg		
Max. motion range	Joint #1	65	±152 deg		±107 deg
		85			
		A0			
	Joint #2	65	±152.5 deg *a	±130 deg	
		85			
		A0			
	Joint #3	1	180 mm : G10/G20-**1S*, D* 150 mm : G10/G20-**1C*, P*, D* with bellows option		
		4	420 mm : G10/G20-**4S*, D* 390 mm : G10/G20-**4C*, P*, D* with bellows option		
	Joint #4		±360 deg		
Max. pulse range (pulse)	Joint #1	65	-1805881 to ＋7048761		-495161 to ＋5738041
		85			
		A0			
	Joint #2	65	±2776178 *a	±2366578	
		85			
		A0			
	Joint #3	1	-1946420 : G10/G20-**1S*, D* -1622016 : G10/G20-**1C*, P*, D* with bellows option		
		4	-2270823 : G10/G20-**4S*, D* -2108621 : G10/G20-**4C*, P*, D* with bellows option		
	Joint #4	G10	±1951517		
		G20	±2752512		

The length of Arm #1 + #2 varies in different Manipulator models.

65 : 650 mm G10 only

85 : 850 mm G10/G20

A0 : 1000 mm G20 only

*a : The Joint #2 values for the following manipulators

	Max. motion range	Max. pulse range
G10/G20-85C, P, D with bellows option (Z: -360 to -390 only) G10/G20-85CW, PW, DW with bellows option G10/G20-85CR, PR, DR with bellows option	±151 deg	±2748871

Item			G10-*****	G20-*****
Resolution	Joint #1		0.0000343 deg/pulse	
	Joint #2		0.0000549 deg/pulse	
	Joint #3	1	0.0000925 mm/pulse	
		4	0.000185 mm/pulse	
	Joint #4		0.0001845 deg/pulse	0.0001308 deg/pulse
Motor rated capacity	Joint #1		750 W	
	Joint #2		600 W	
	Joint #3		400 W	
	Joint #4		150 W	
Payload	rated		5 kg	10 kg
	max.		10 kg	20 kg
Joint #4 allowable moment of inertia *4	rated		0.02 kg·m^2	0.05 kg·m^2
	max.		0.25 kg·m^2	0.45 kg·m^2
Hand	Shaft diameter		ø25 mm	
	Through hole		ø18 mm	
Joint #3 down force			250 N	
Installed wire for customer use			24 (15 pin + 9 pin : D-sub)	
Installed pneumatic tube for customer use			2 pneumatic tubes (ø6 mm) : 0.59 MPa (6 kgf/cm^2 : 86 psi)	
			2 pneumatic tubes (ø4 mm) : 0.59 MPa (6 kgf/cm^2 : 86 psi)	
Environmental requirements *5	Ambient Temperature		5 to 40°C	
	Ambient relative humidity		10 to 80% (no condensation)	
Noise level *6			L_{Aeq} = 70 dB(A) or under	
Applicable Controller *7			RC700-A	
Assignable Value ( ) Default values	Speed		1 to (5) to 100	
	Accel *8		1 to (10) to 120	
	SpeedS		1 to (50) to 2000	
	AccelS		1 to (200) to 25000	
	Fine		0 to (10000) to 65535	
	Weight		0,400 to (10,400) to 20,400	
Safety standard			CE Marking EMC Directive, Machinery Directive, RoHS Directive UKCA Marking EMC Regulations, Machinery Regulations, RoHS Regulations KC Marking / KCs Marking UL standards UL1740, CAN/CSA-Z434	

*1: The exhaust system in the Cleanroom-model Manipulator (G10/G20-***C*) draws air from the base interior and arm cover interior.
A crack or other opening in the base unit can cause loss of negative air pressure in the outer part of the arm, which can cause increased dust emission.
Do not remove the maintenance cover on the front of the base.
Seal the exhaust port and the exhaust tube with vinyl tape so that the joint is airtight.
If the exhaust flow is not sufficient, dust particle emission may exceed the specified maximum level.

Cleanliness level: Class ISO 3 (ISO14644-1)

Exhaust System: Exhaust port diameter : Inner diameter: ø12 mm / Outer diameter: ø16 mm
Exhaust tube : Polyurethane tube
Outer diameter: ø12 mm (Inner diameter:ø8 mm)
or Inner diameter ø16mm or larger
Recommended exhaust flow rate : Approx. 1000 cm^3/s (Normal)

ESD specification uses resin materials with antistatic treatment. This model controls adhesion of dust due to electrification.

*2: IP (International Protection) for the Protected-model Manipulator indicates International Standard of the protection level against dust and water.

Normal G10/G20-***D* Manipulators do not have bellows. The normal G10/G20-***D* Manipulator (without bellows option) operates under adverse conditions with oily mist.

If necessary, select the bellows option at shipment.

The Manipulators with bellows (option) comply with grade of protection IP54 (IEC 60529, JIS C0920).

Model	Degree of protection		
G10/G20-***D* with bellows option	IP54	Dust : 5	Dust shall not ingress in a quantity to interfere with satisfactory operation of the equipment.
		Water : 4	Water splashing against the enclosure from any direction shall have no harmful effect.
G10/G20-***P*	IP65	Dust : 6	No ingress of dust.
		Water : 5	Water projected by a nozzle against enclosure from any direction shall have no harmful effects.

*3: In the case of PTP command. Maximum operating speed for CP command is 2000 mm/s on horizontal plane.

*4: In the case where the center of gravity is at the center of Joint #4. If the center of gravity is not at the center of Joint #4, set the parameter using Inertia command.

*5: When the product is used in a low temperature environment around the minimum temperature of the product specification, or when the product is suspended for a long time on holidays or at night, a collision detection error may occur due to the large resistance of the drive unit immediately after the start of operation. In such a case, it is recommended to warm up for about 10 minutes.

*6: Conditions of Manipulator during measurement as follows:
Operating conditions : Under rated load, 4-joint simultaneous motion, maximum speed, maximum acceleration/deceleration, and duty 50%.
Measurement point : Rear of the Manipulator, 1000 mm apart from the motion range, 50 mm above the base-installed surface.

*7: For delivery up until January 2017, there are systems in combination of G series and RC620.

*8: In general use, Accel setting 100 is the optimum setting that maintains the balance of acceleration and vibration when positioning. Although values larger than 100 can be set to Accel, it is recommended to minimize the use of large values to necessary motions since operating the manipulator continuously with the large Accel setting may shorten the product life remarkably.

Appendix B: Stopping time and Stopping distance in Emergency

The stopping time and stopping distance in emergency stop are shown in a graph for each model.

The stopping time is “Stopping time” in the figure below. Be sure to confirm that safety is ensured according to the installation environment and operation of the robot.

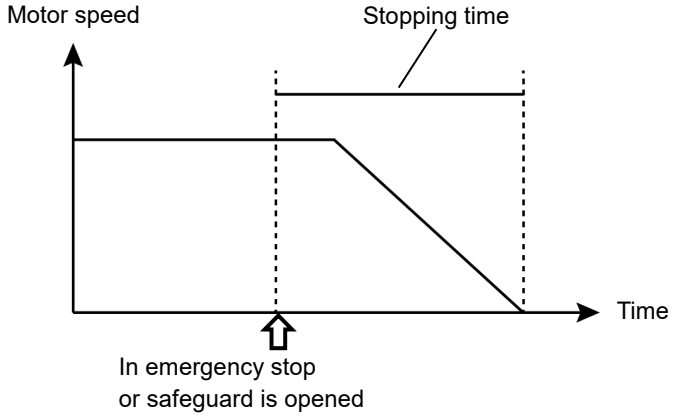

Condition:

The stopping time and stopping distance vary depending on the parameters (setting value) set for the robot. In this chapter, the time and distance are shown with the following parameters.

Accel : 100 ,100
Other : Default

Description of legend:

The graph is shown for each Weight value (rated value, 100%, about 66%, and about 33% of the maximum payload).

Horizontal axis	: Arm speed (Speed value)
Vertical axis	: Stopping time and stopping distance in each arm speed
Time [sec]	: Stopping time
Distance [deg]	: Stopping distance of J1 and J2
Distance [mm]	: Stopping distance of J3

G1 Stopping time and Stopping distance in Emergency

G1-171*, G1-171*Z: J1 (Table top mounting)

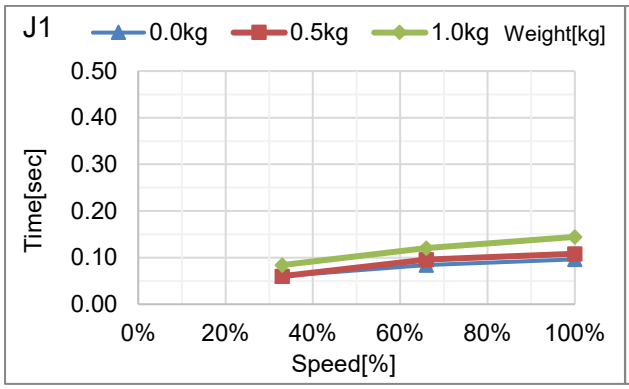

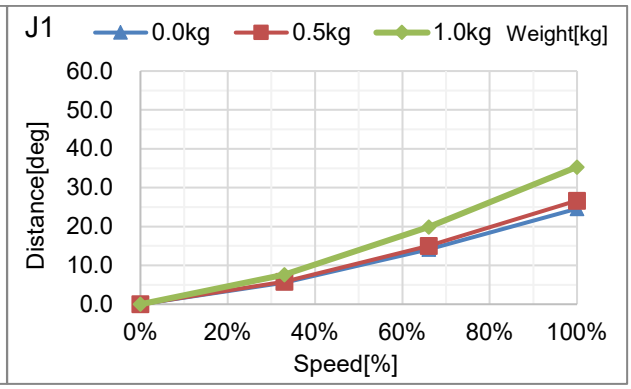

G1-171*, G1-171*Z: J2 (Table top mounting)

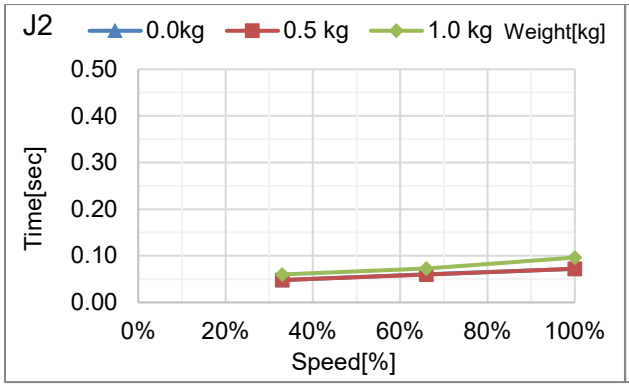

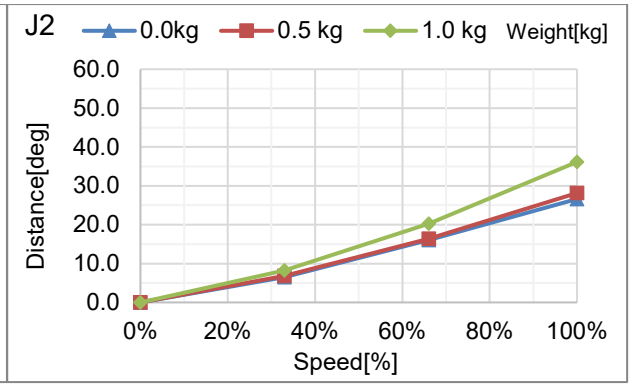

G1-171*, G1-171*Z: J3 (Table top mounting)

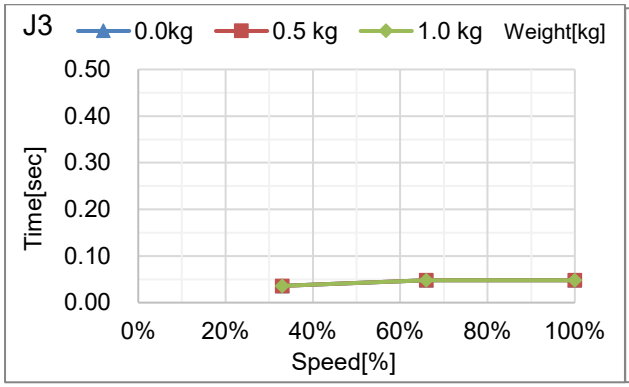

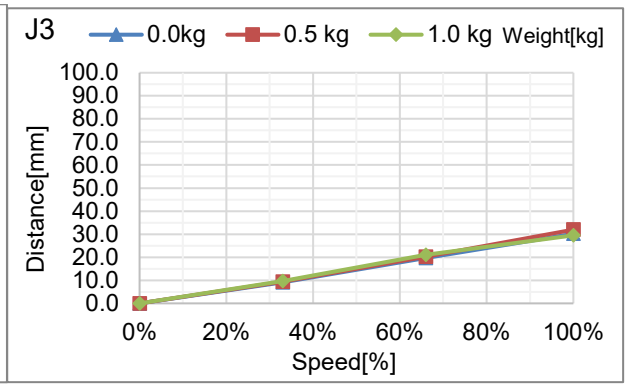

G1-221*, G1-221*Z: J1 (Table top mounting)

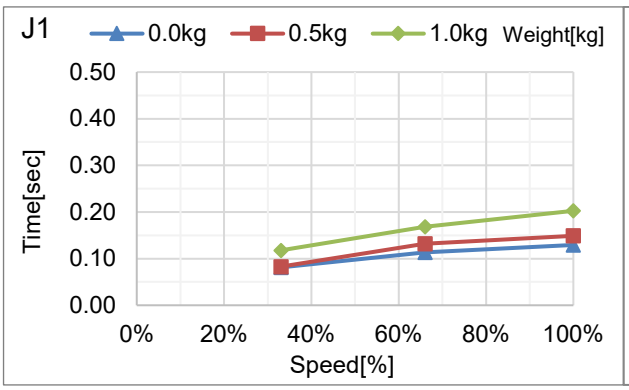

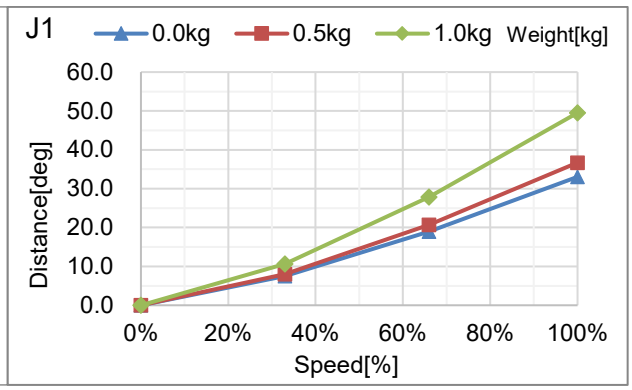

G1-221*, G1-221*Z: J2 (Table top mounting)

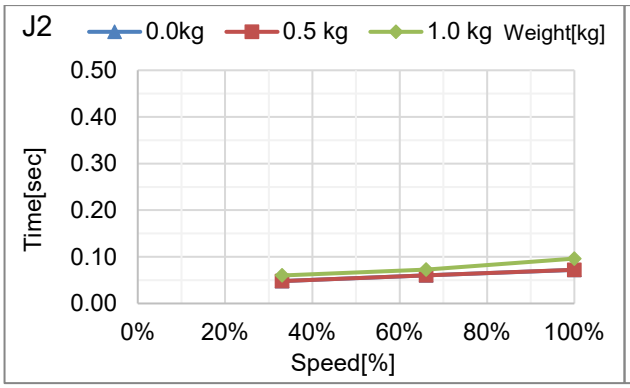

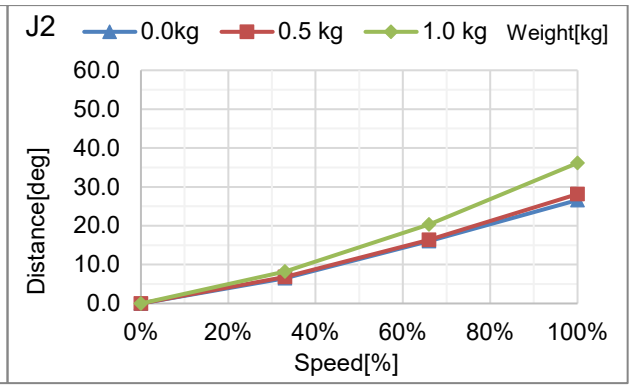

G1-221*, G1-221*Z: J3 (Table top mounting)

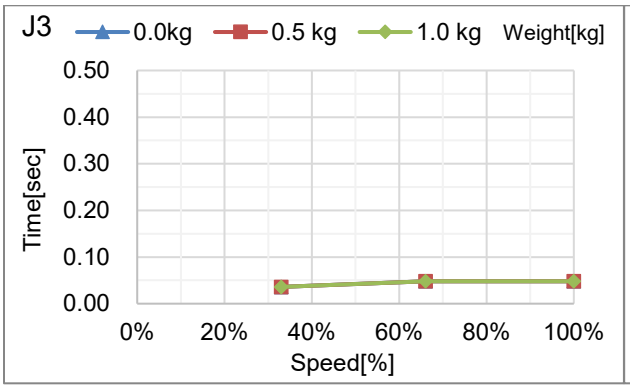

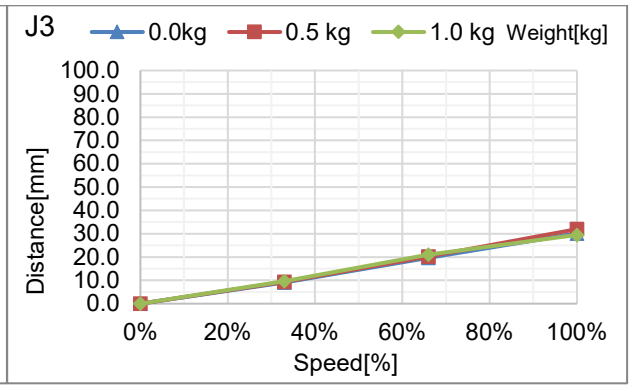

G3 Stopping time and Stopping distance in Emergency

G3-251**: J1 (Table top mounting)

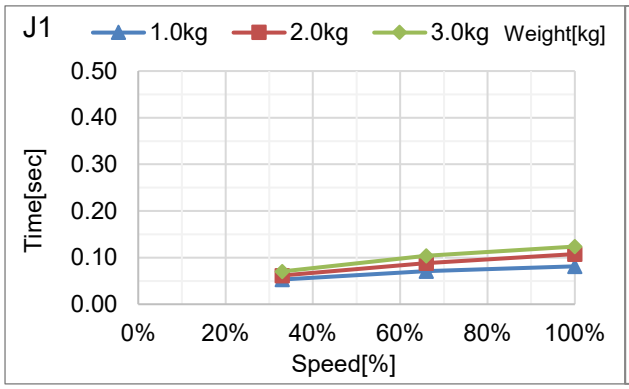

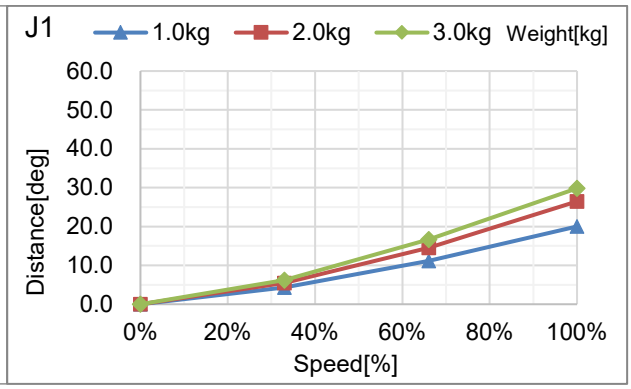

G3-251**: J2 (Table top mounting)

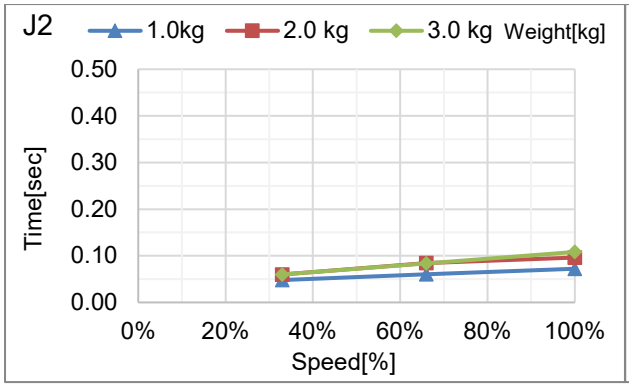

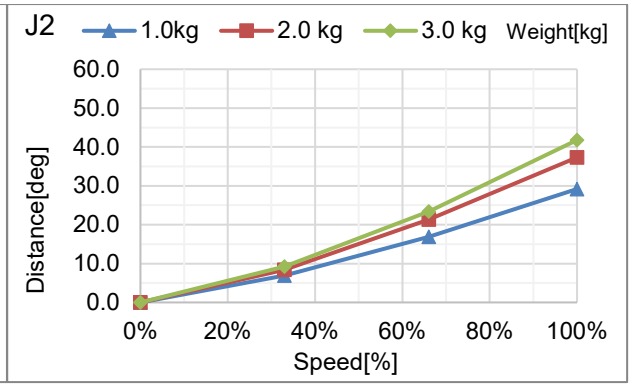

G3-251**: J3 (Table top mounting)

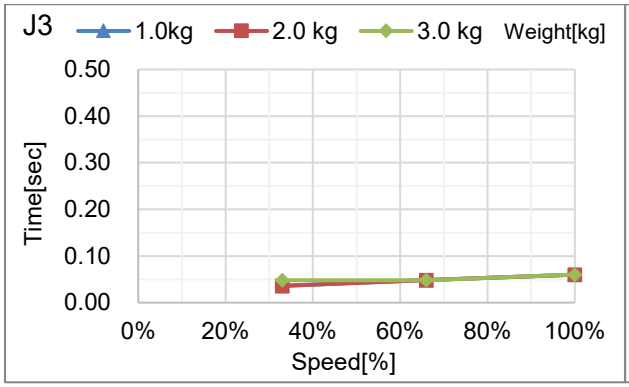

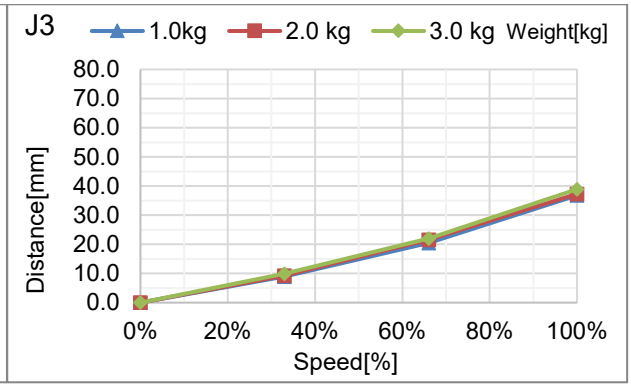

G3-301**: J1 (Table top mounting, Multiple mounting)

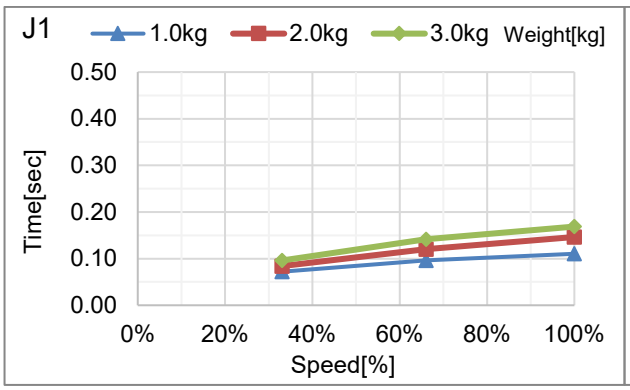

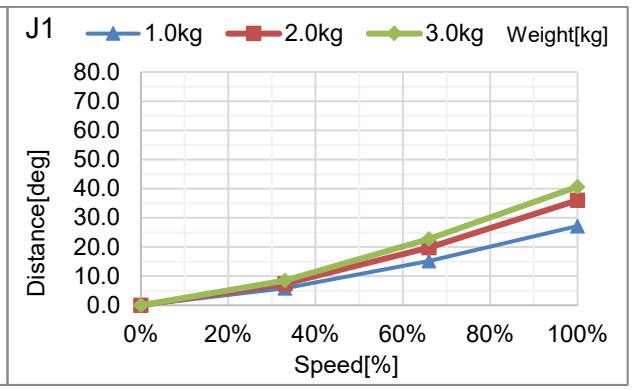

G3-301**: J2 (Table top mounting, Multiple mounting)

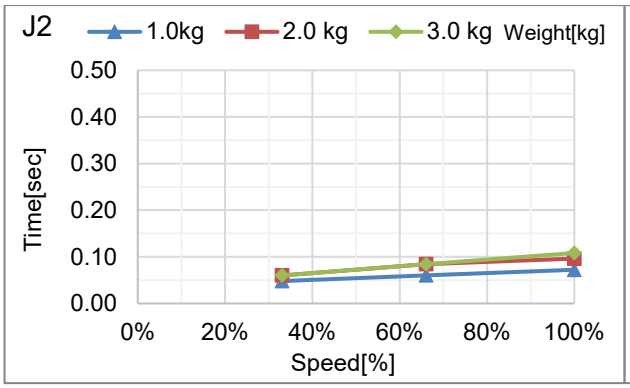

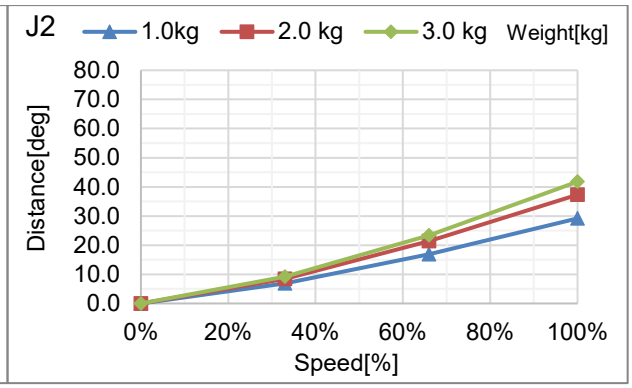

G3-301**: J3 (Table top mounting, Multiple mounting)

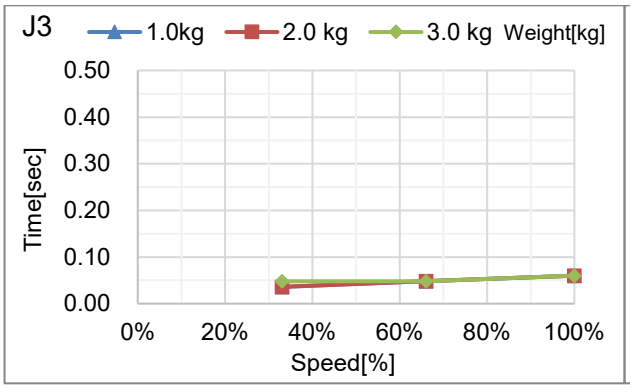

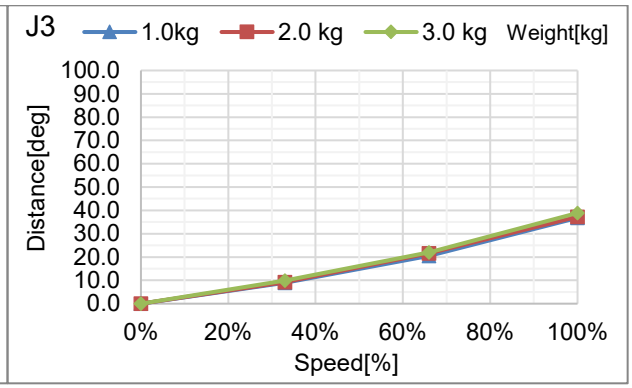

G3-351**: J1 (Table top mounting, Multiple mounting)

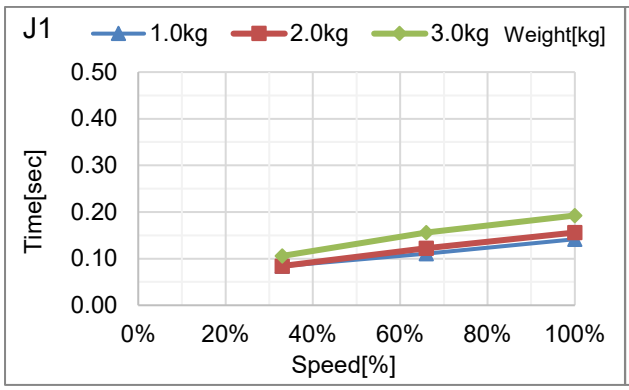

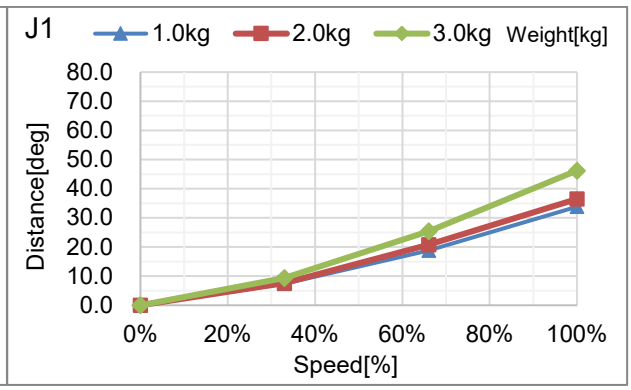

G3-351**: J2 (Table top mounting, Multiple mounting)

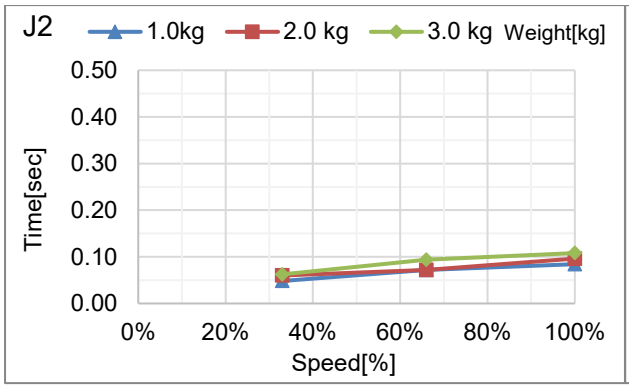

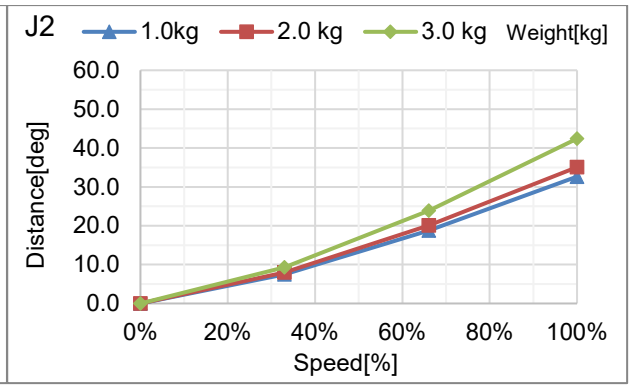

G3-351**: J3 (Table top mounting, Multiple mounting)

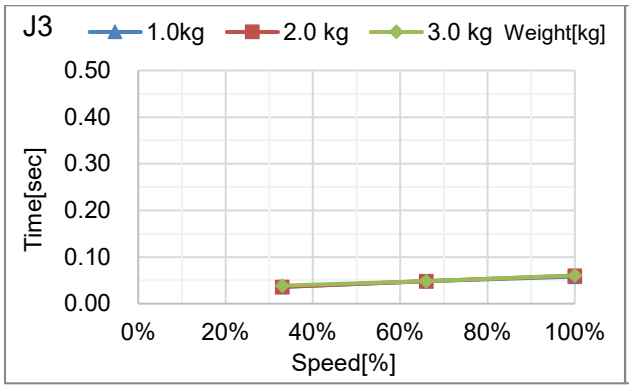

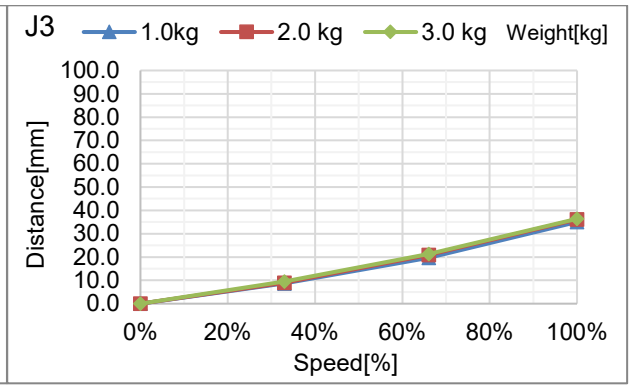

G6 Stopping time and Stopping distance in Emergency

G6-45***: J1 (Table top mounting, Ceiling mounting, wall mounting)

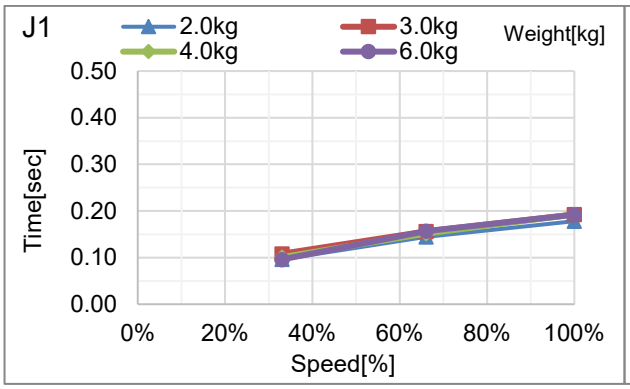

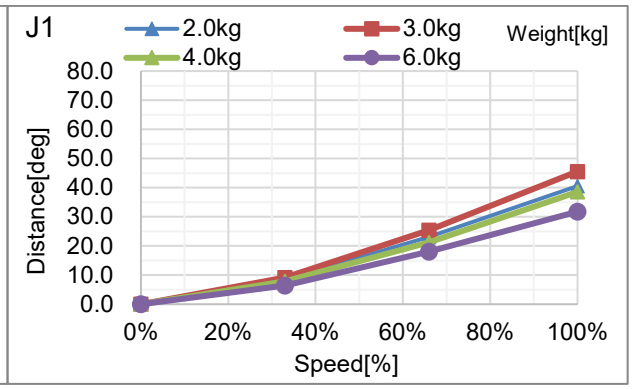

G6-45***: J2 (Table top mounting, Ceiling mounting, wall mounting)

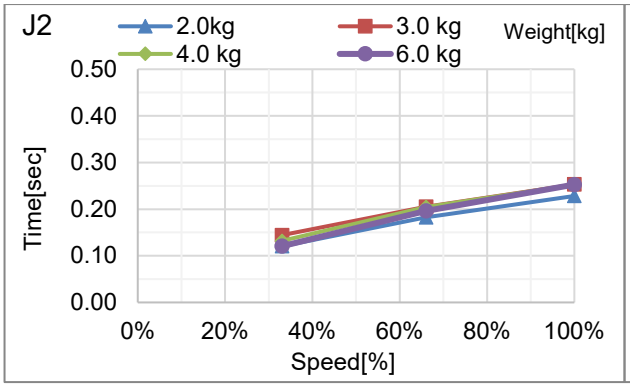

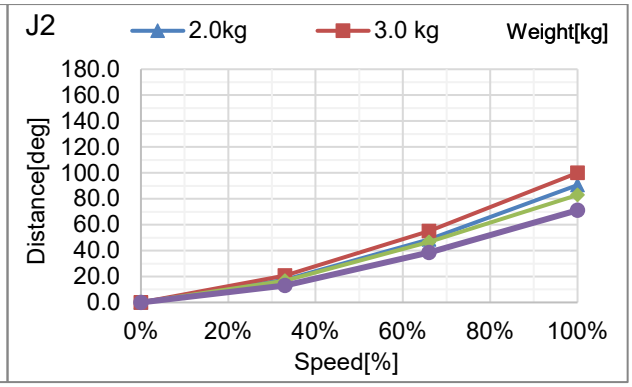

G6-45***: J3 (Table top mounting, Ceiling mounting, wall mounting)

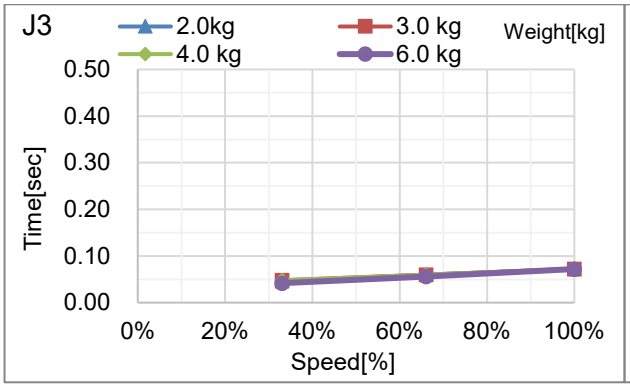

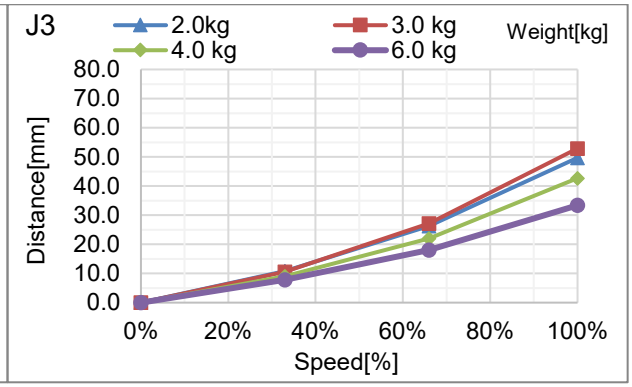

G6-55***: J1 (Table top mounting, Ceiling mounting, wall mounting)

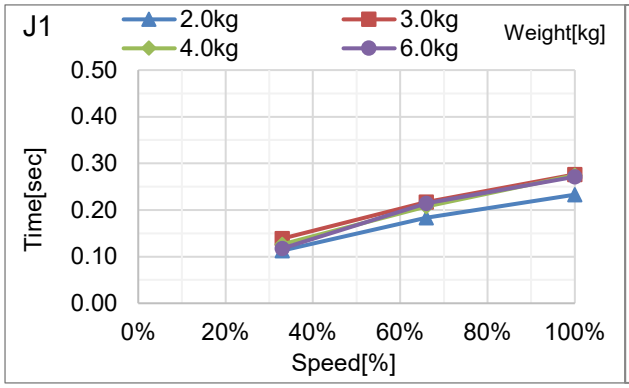

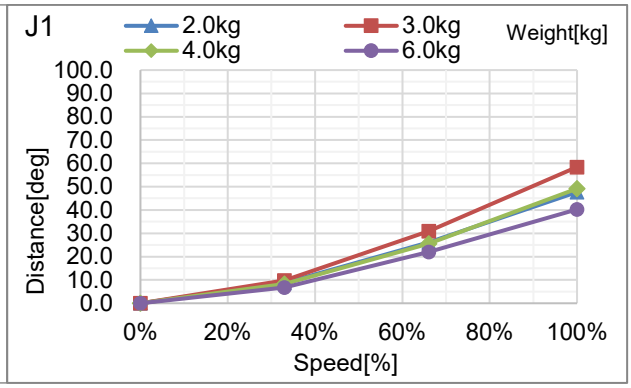

G6-55***: J2 (Table top mounting, Ceiling mounting, wall mounting)

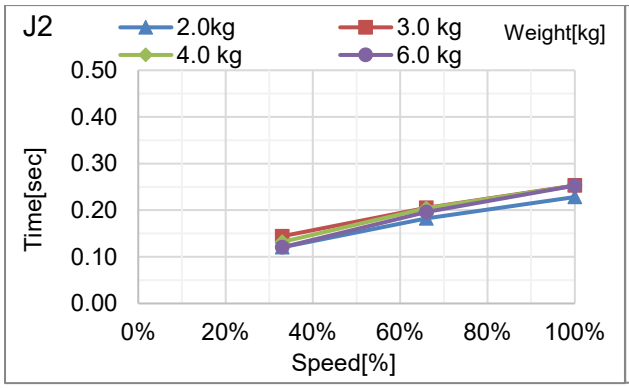

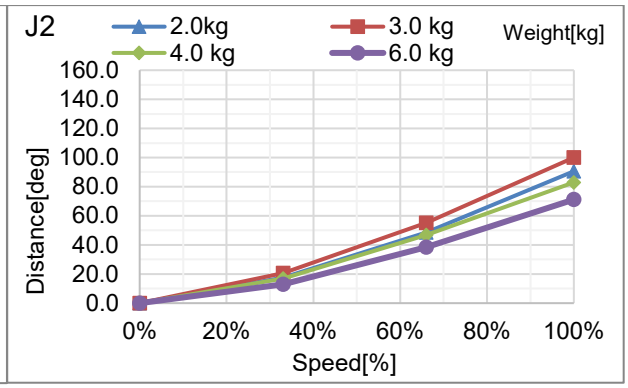

G6-55***: J3 (Table top mounting, Ceiling mounting, wall mounting)

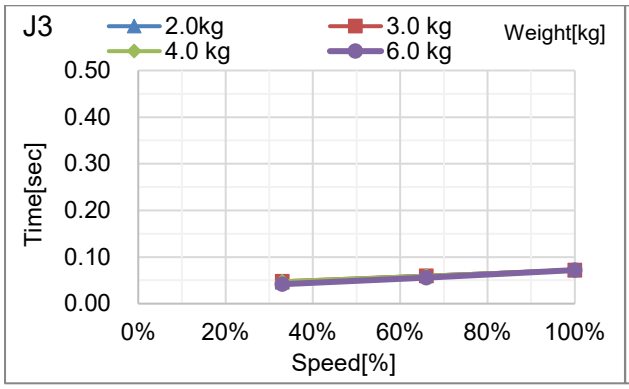

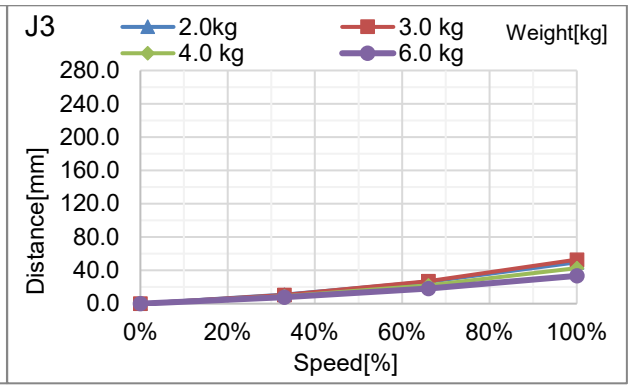

G6-65***: J1 (Table top mounting, Ceiling mounting, wall mounting)

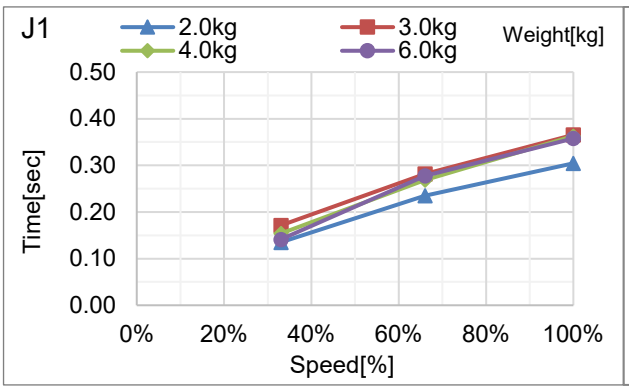

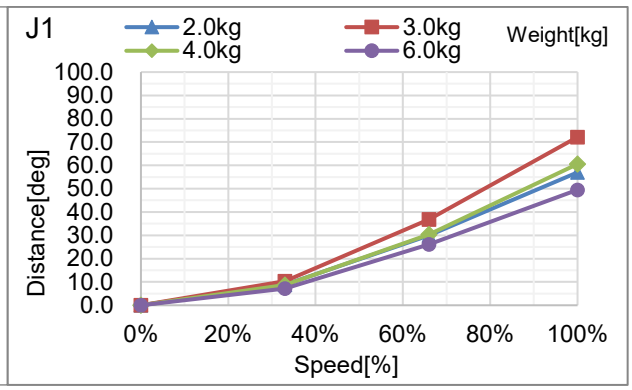

G6-65***: J2 (Table top mounting, Ceiling mounting, wall mounting)

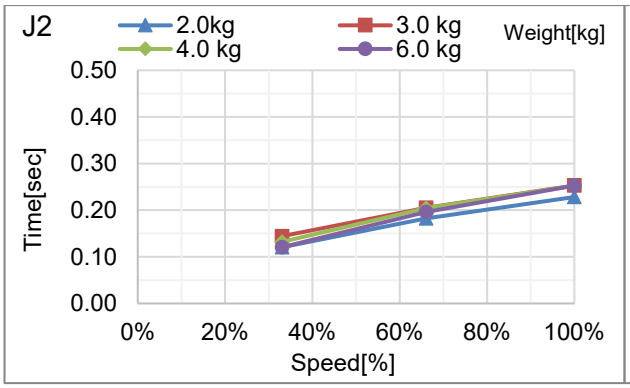

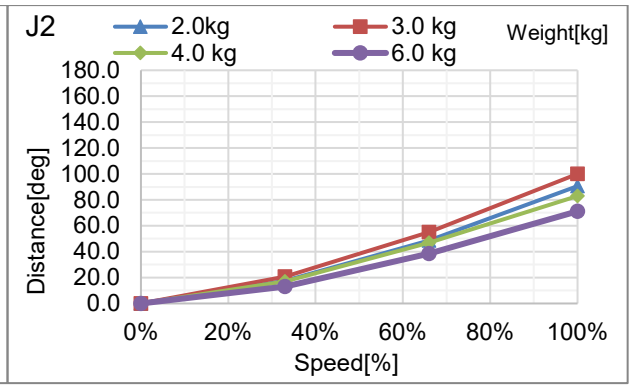

G6-65***: J3 (Table top mounting, Ceiling mounting, wall mounting)

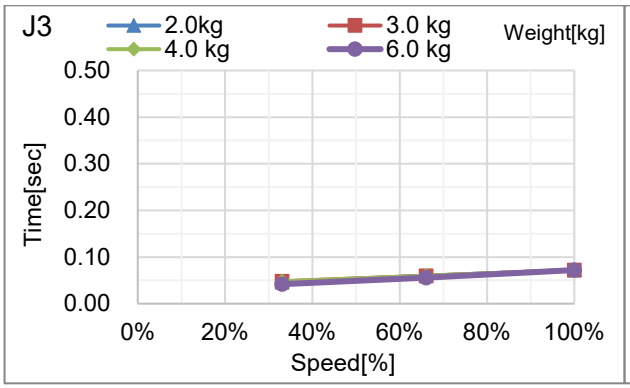

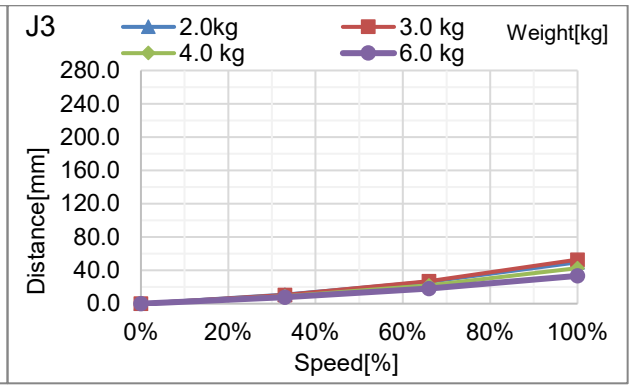

G10 Stopping time and Stopping distance in Emergency

G10-65***: J1 (Table top mounting, Ceiling mounting, wall mounting)

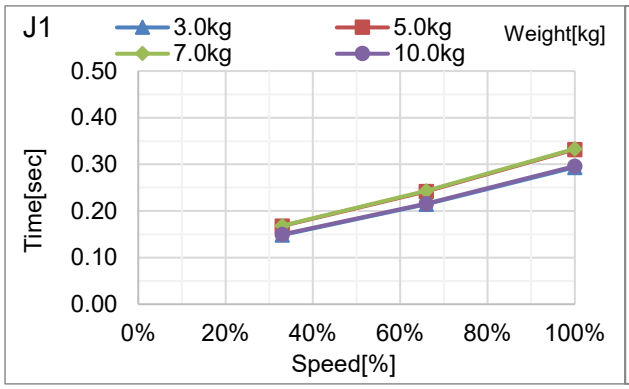

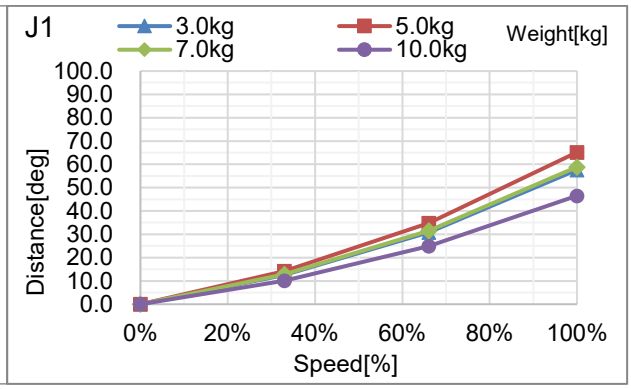

G10-65***: J2 (Table top mounting, Ceiling mounting, wall mounting)

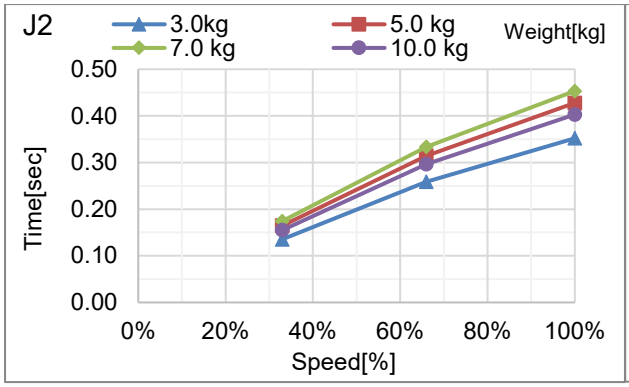

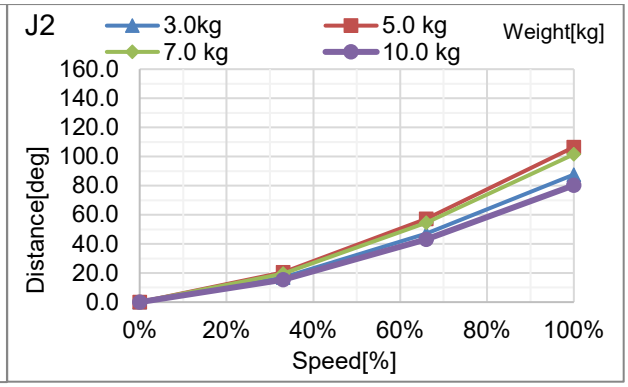

G10-65***: J3 (Table top mounting, Ceiling mounting, wall mounting)

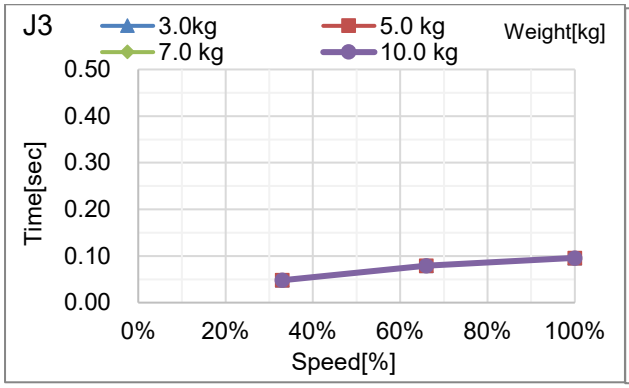

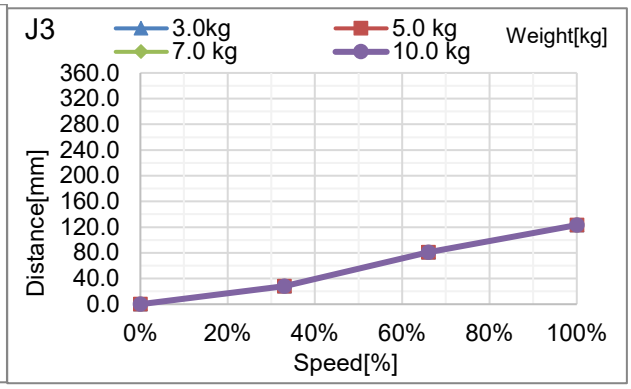

G10-85***: J1 (Table top mounting, Ceiling mounting, wall mounting)

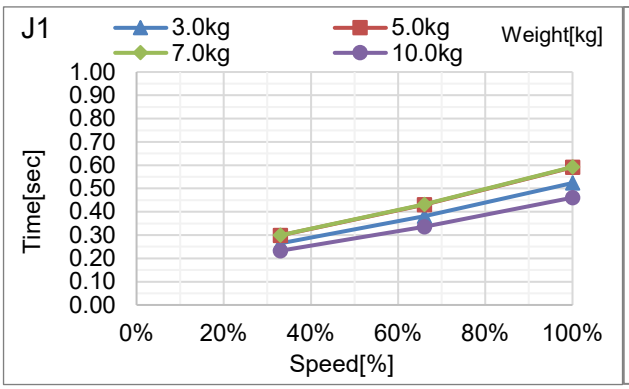

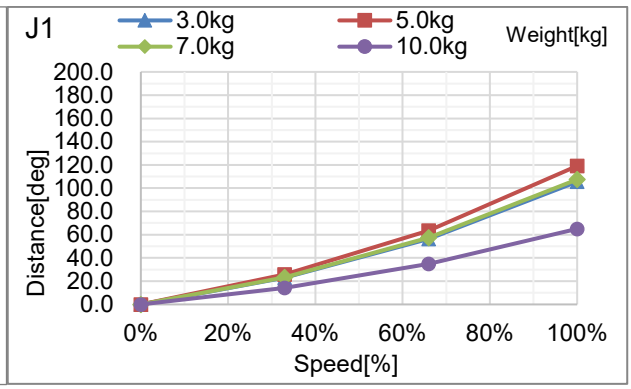

G10-85***: J2 (Table top mounting, Ceiling mounting, wall mounting)

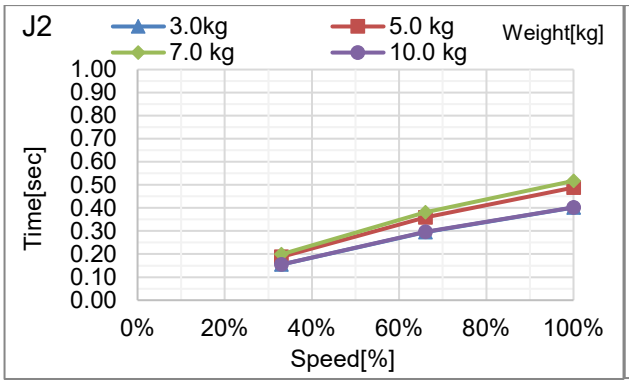

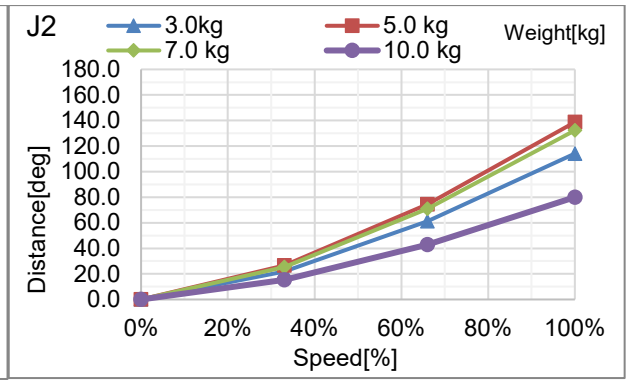

G10-85***: J3 (Table top mounting, Ceiling mounting, wall mounting)

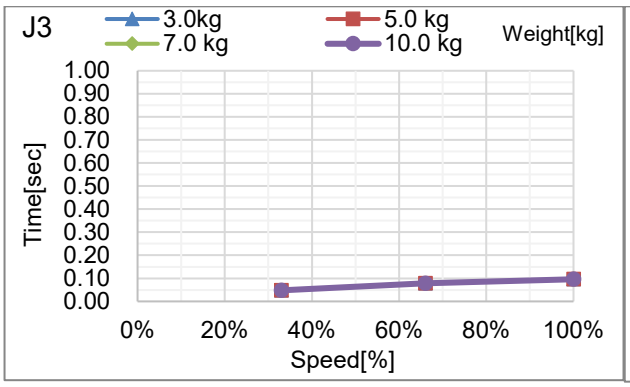

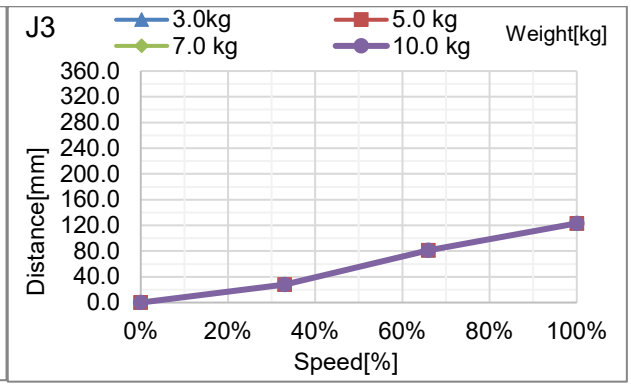

G20 Stopping time and Stopping distance in Emergency

G20-85***: J1 (Table top mounting, Ceiling mounting, wall mounting)

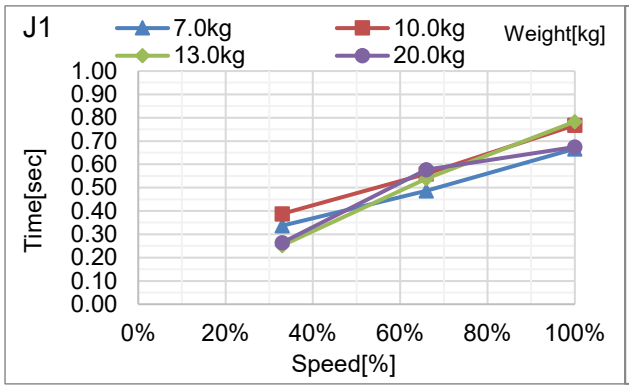

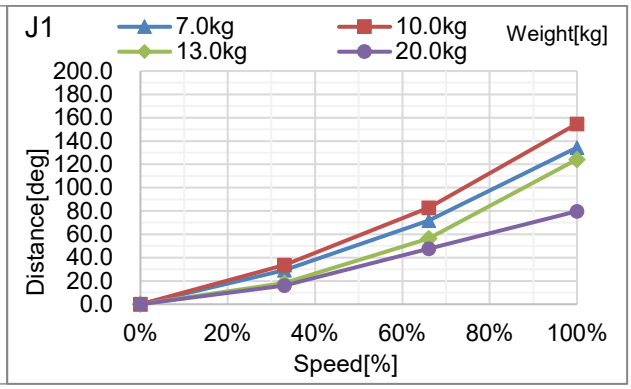

G20-85***: J2 (Table top mounting, Ceiling mounting, wall mounting)

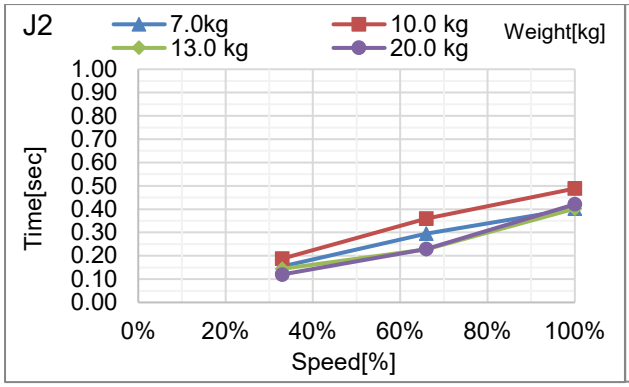

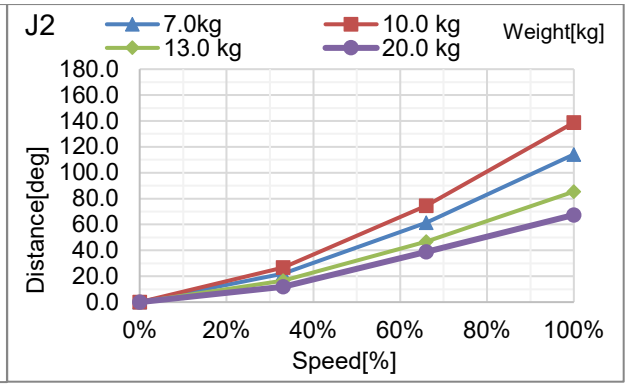

G20-85***: J3 (Table top mounting, Ceiling mounting, wall mounting)

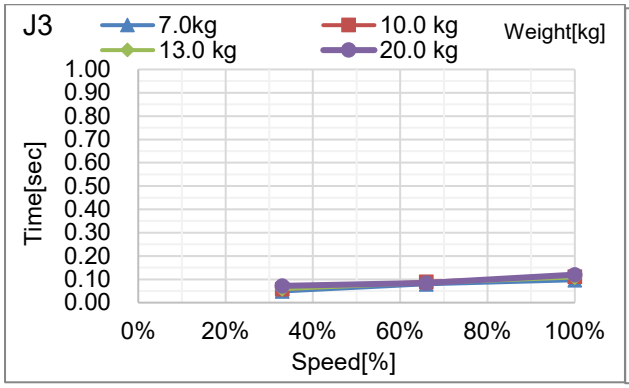

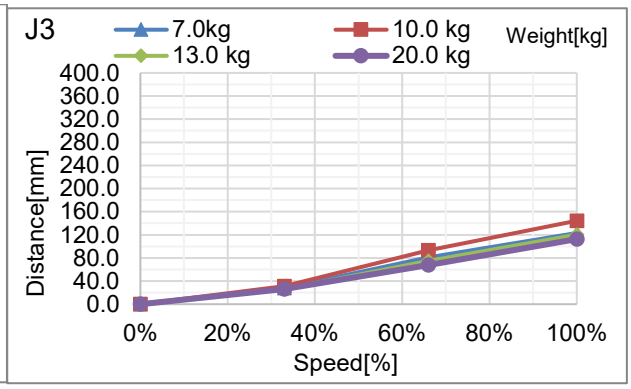

G20-A0***: J1 (Table top mounting, Ceiling mounting, wall mounting)

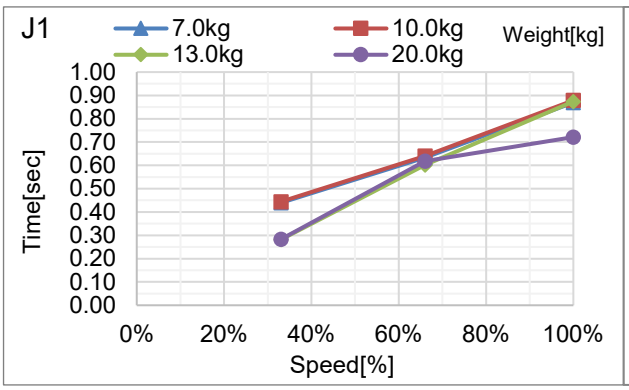

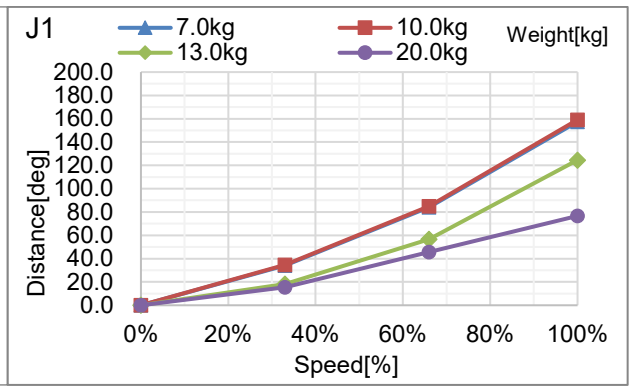

G20-A0***: J2 (Table top mounting, Ceiling mounting, wall mounting)

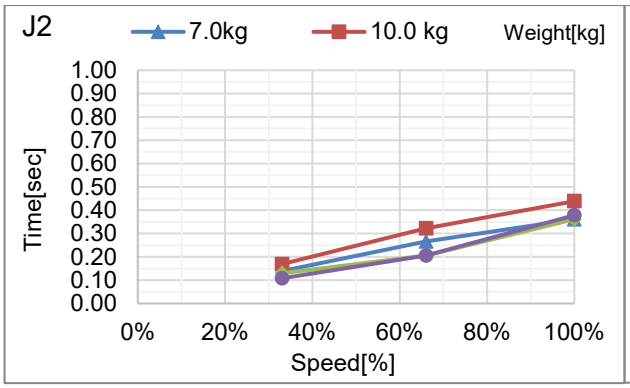

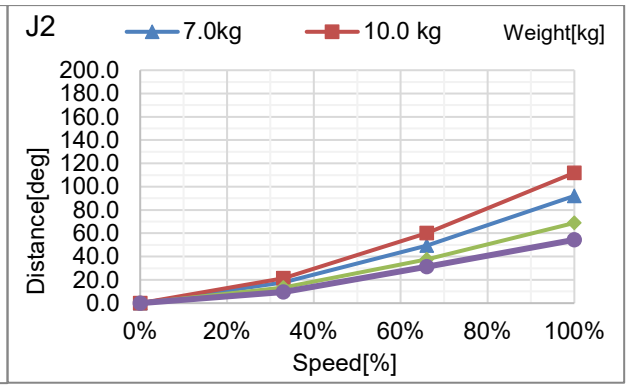

G20-A0***: J3 (Table top mounting, Ceiling mounting, wall mounting)

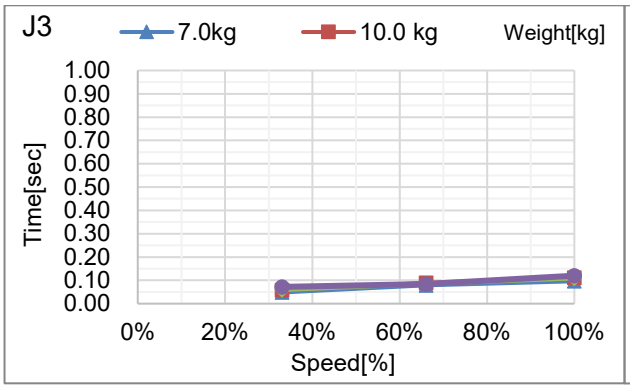

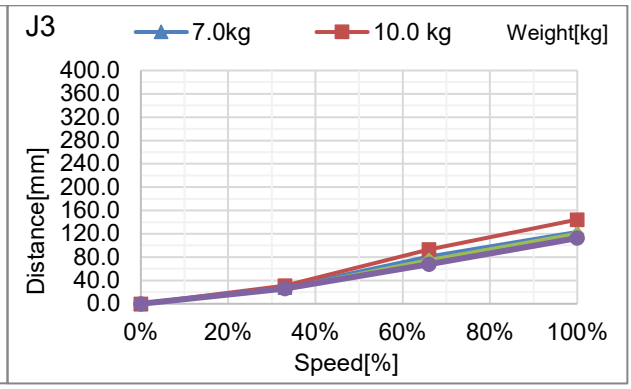

Appendix C: Stopping time and Stopping distance When Safeguard Is Opened

The stopping time and stopping distance when safeguard is opened are shown in a graph for each model.

The stopping time is “Stopping time” in the figure below. Be sure to confirm that safety is ensured according to the installation environment and operation of the robot.

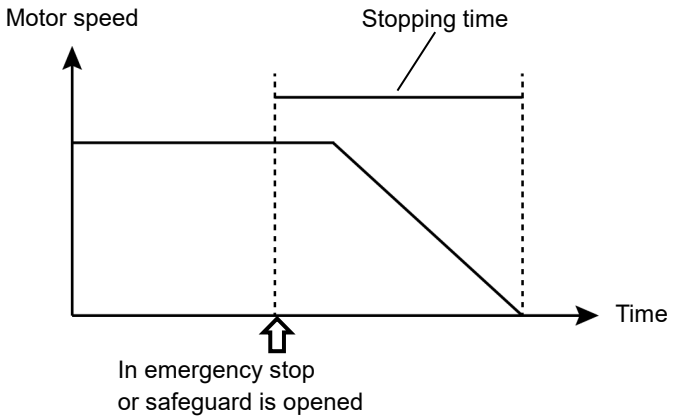

Condition:

The stopping time and stopping distance vary depending on the parameters (setting value) set for the robot. In this chapter, the time and distance are shown with the following parameters.

Accel : 100 ,100
Other : Default

Description of legend:

The graph is shown for each Weight value (rated value, 100%, about 66%, and about 33% of the maximum payload).

Horizontal axis	: Arm speed (Speed value)
Vertical axis	: Stopping time and stopping distance in each arm speed
Time [sec]	: Stopping time
Distance [deg]	: Stopping distance of J1 and J2
Distance [mm]	: Stopping distance of J3

G1 Stopping time and Stopping distance When Safeguard Is Opened

G1-171*, G1-171*Z: J1 (Table top mounting)

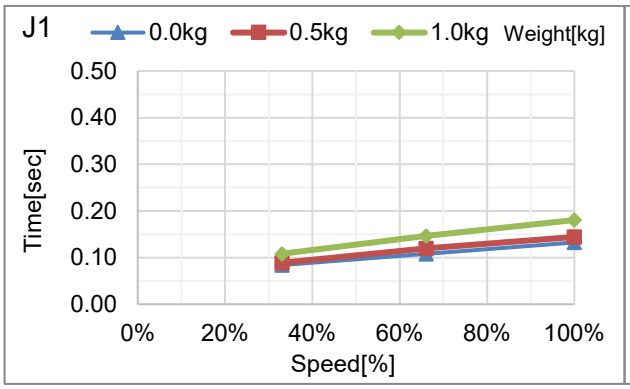

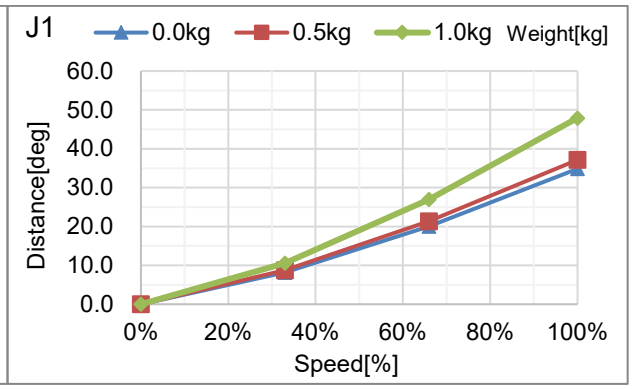

G1-171*, G1-171*Z: J2 (Table top mounting)

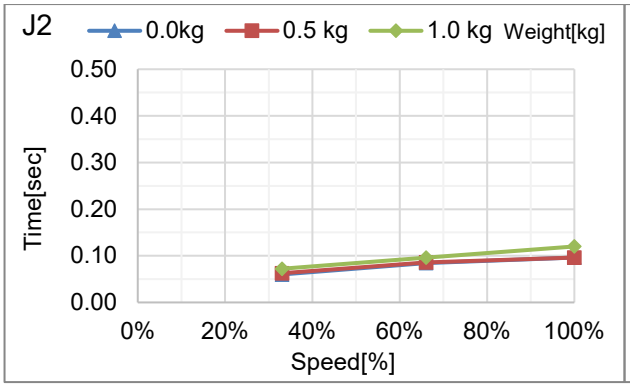

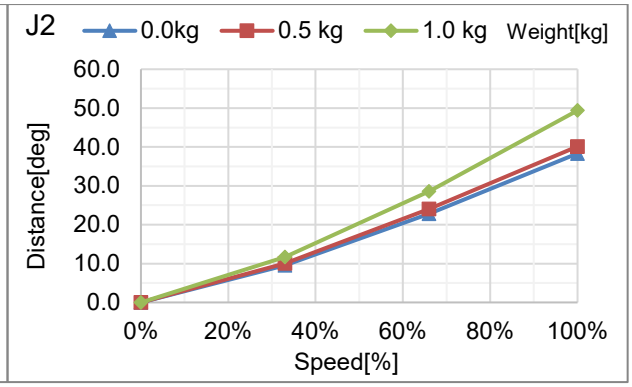

G1-171*, G1-171*Z: J3 (Table top mounting)

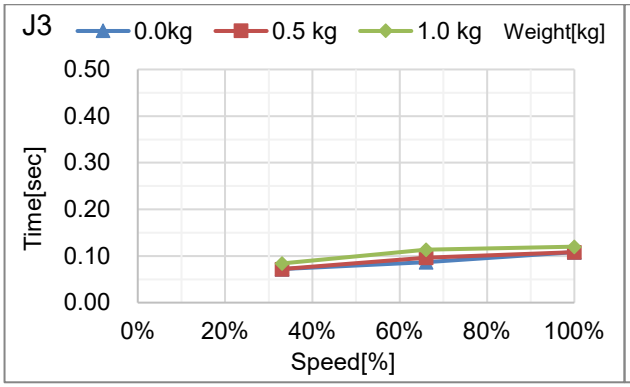

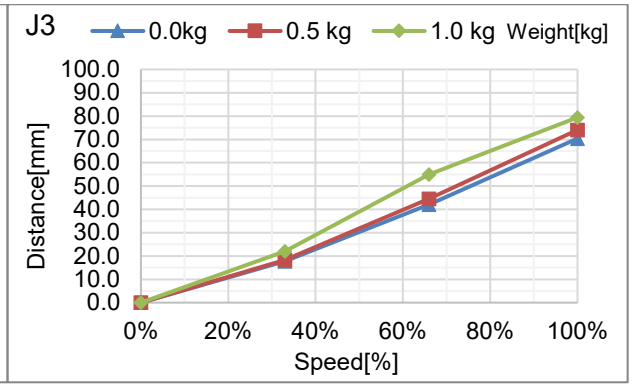

G1-221*, G1-221*Z: J1 (Table top mounting)

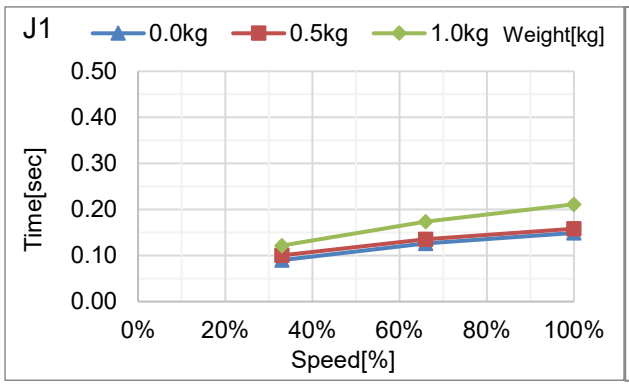

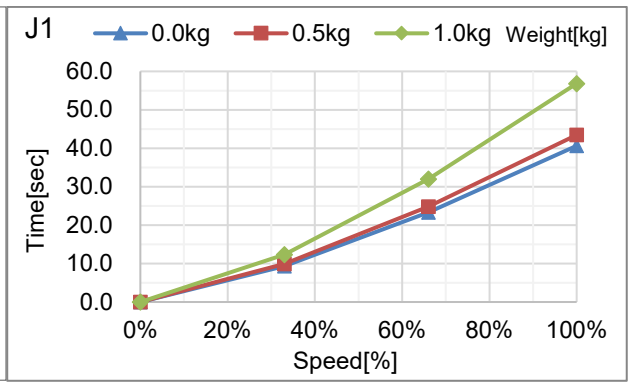

G1-221*, G1-221*Z: J2 (Table top mounting)

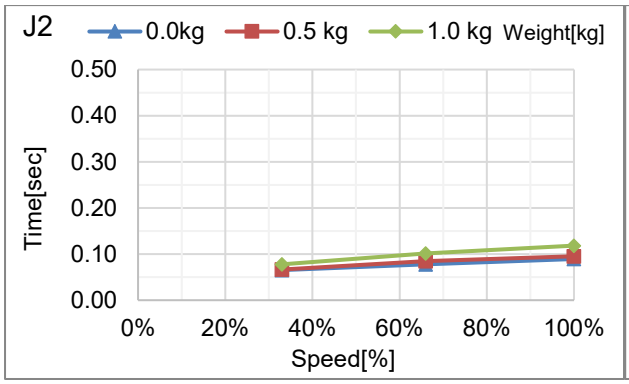

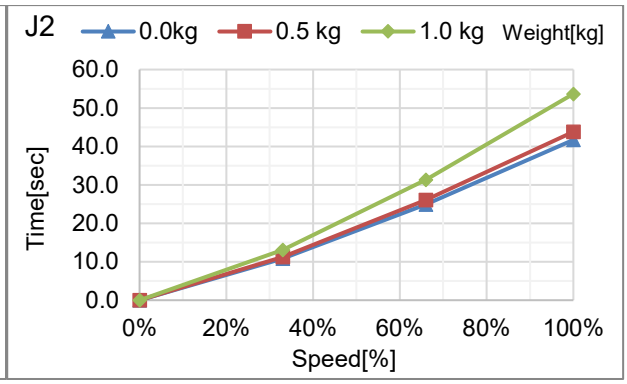

G1-221*, G1-221*Z: J3 (Table top mounting)

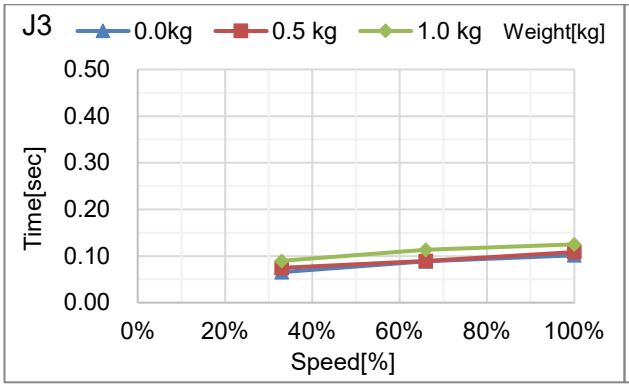

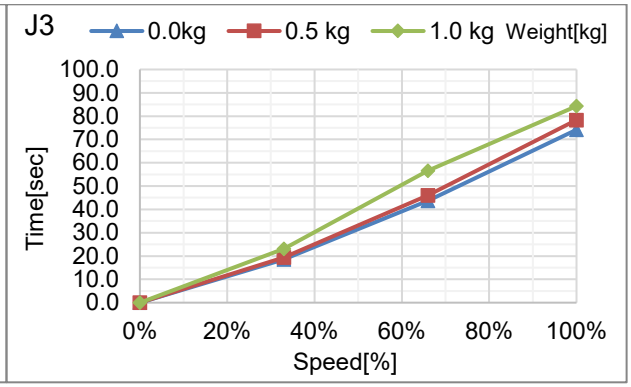

G3 Stopping time and Stopping distance When Safeguard Is Opened

G3-251**: J1 (Table top mounting)

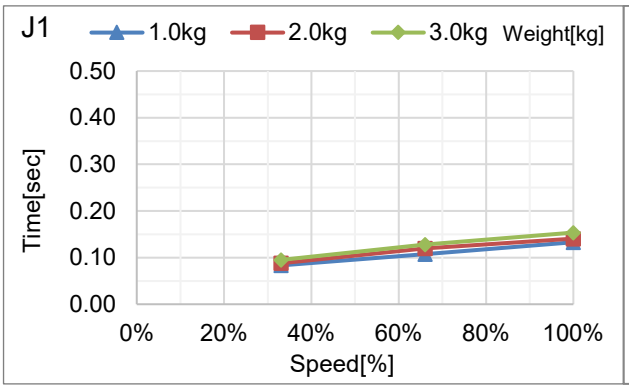

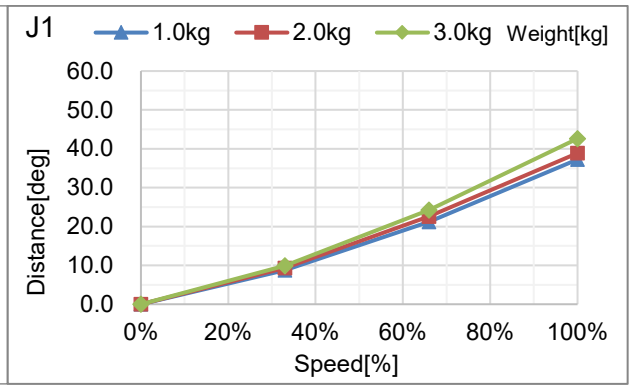

G3-251**: J2 (Table top mounting)

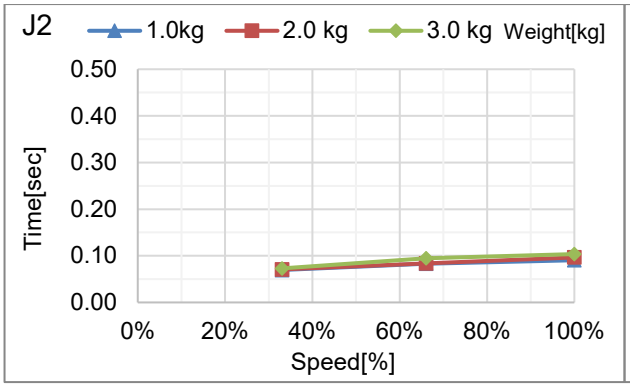

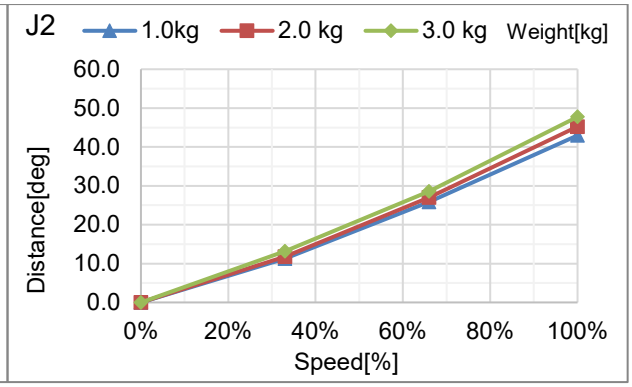

G3-251**: J3 (Table top mounting)

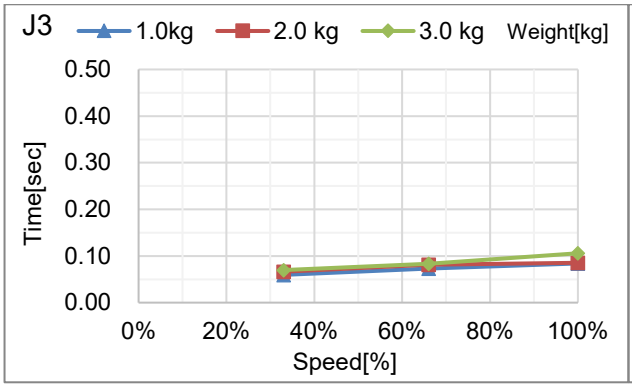

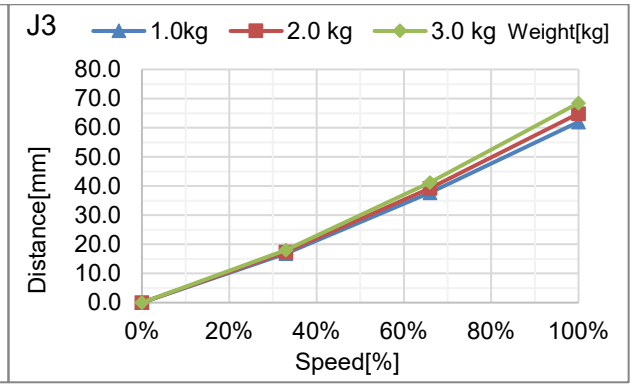

G3-301**: J1 (Table top mounting, Multiple mounting)

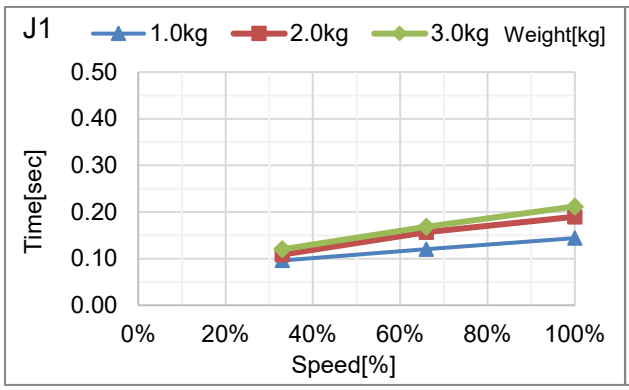

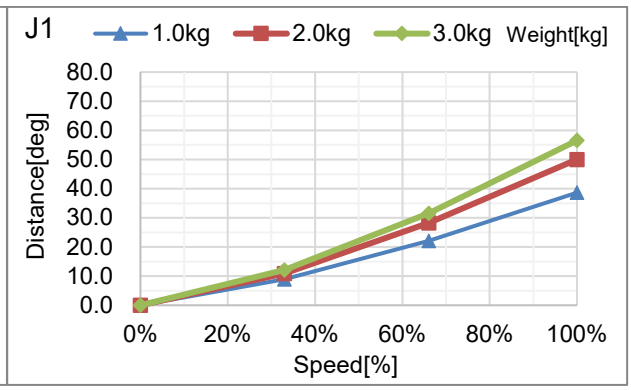

G3-301**: J2 (Table top mounting, Multiple mounting)

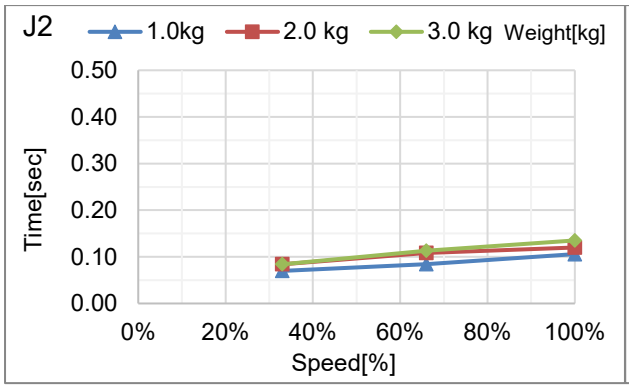

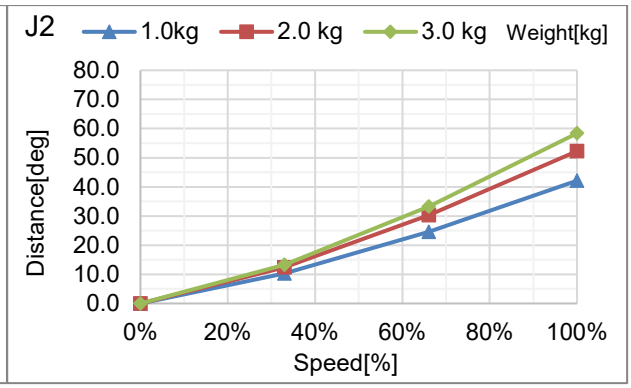

G3-301**: J3 (Table top mounting, Multiple mounting)

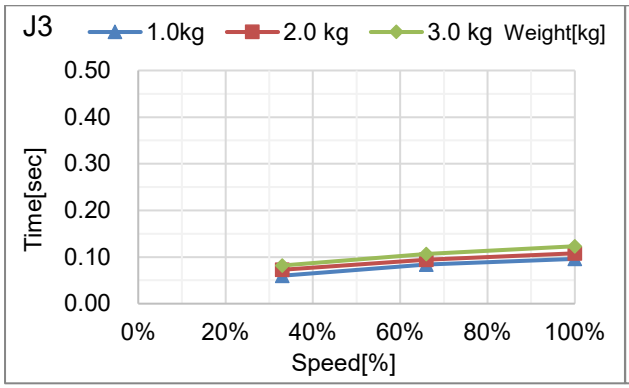

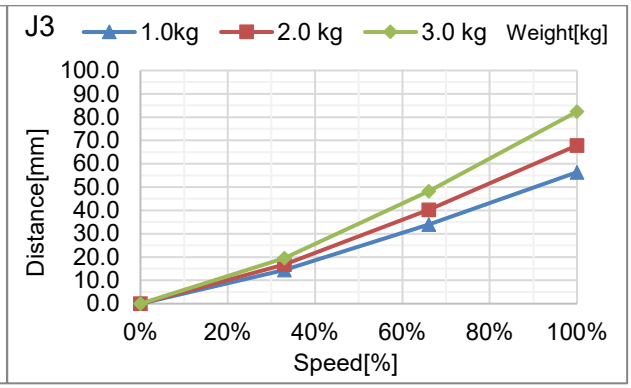

G3-351**: J1 (Table top mounting, Multiple mounting)

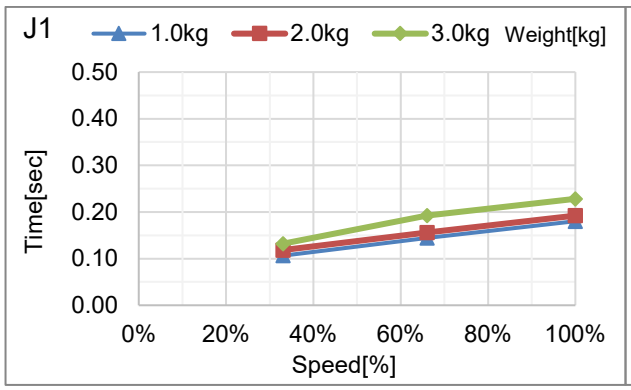

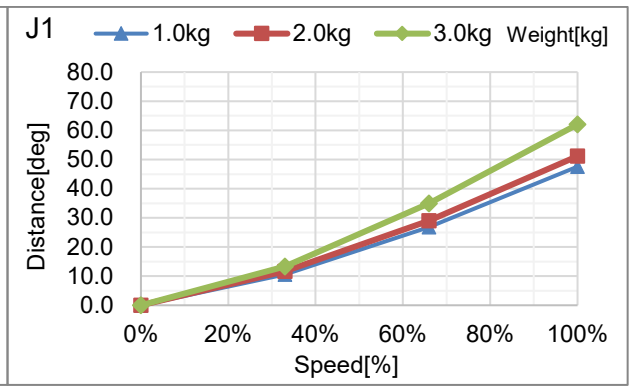

G3-351**: J2 (Table top mounting, Multiple mounting)

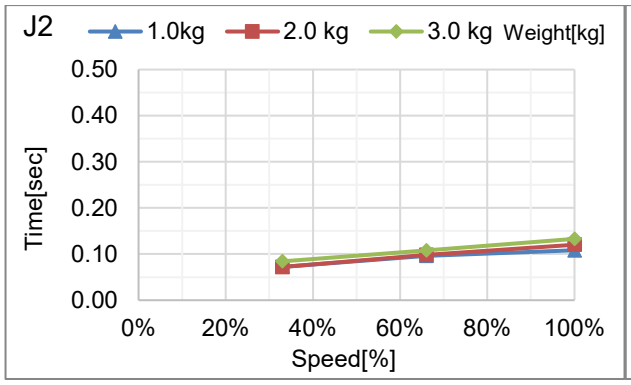

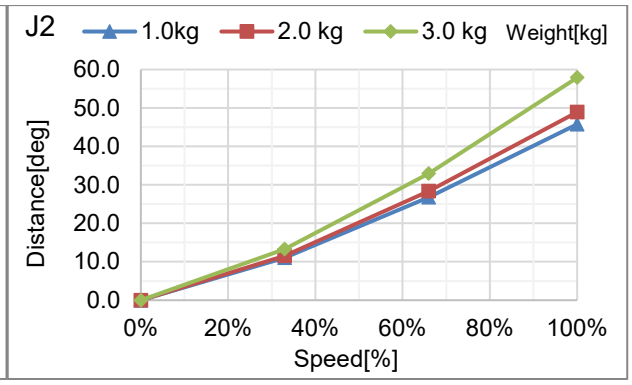

G3-351**: J3 (Table top mounting, Multiple mounting)

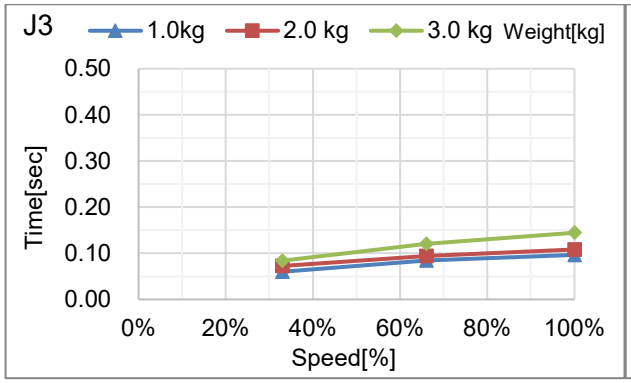

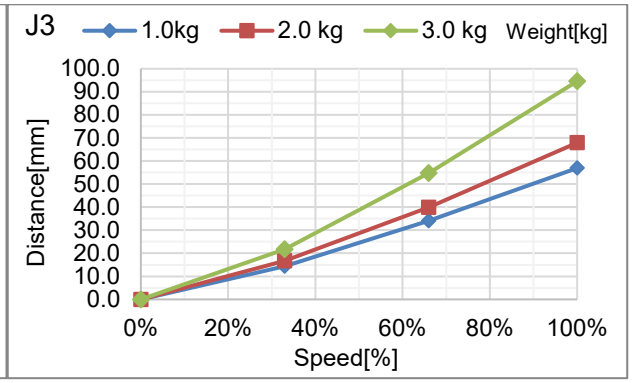

G6 Stopping time and Stopping distance When Safeguard Is Opened

G6-45***: J1 (Table top mounting, Ceiling mounting, wall mounting)

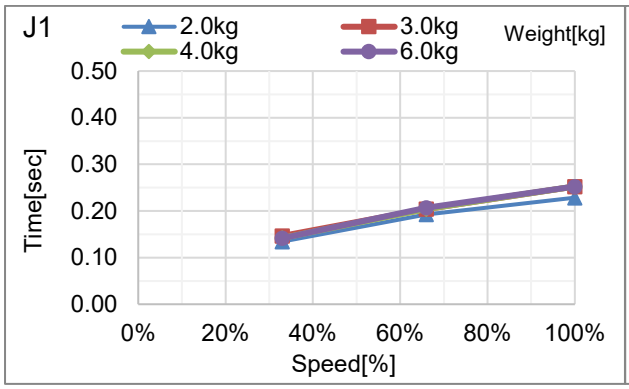

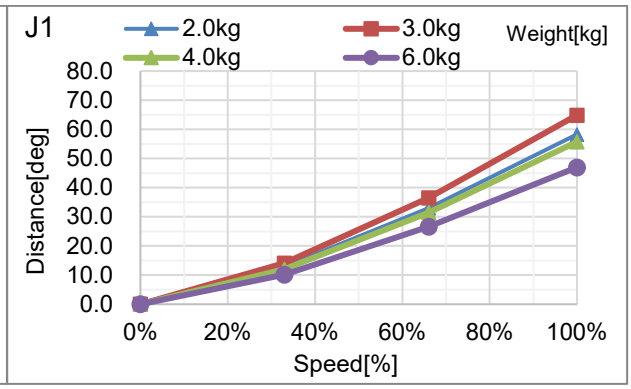

G6-45***: J2 (Table top mounting, Ceiling mounting, wall mounting)

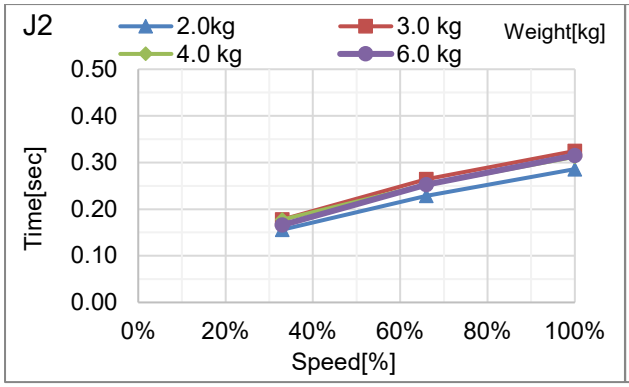

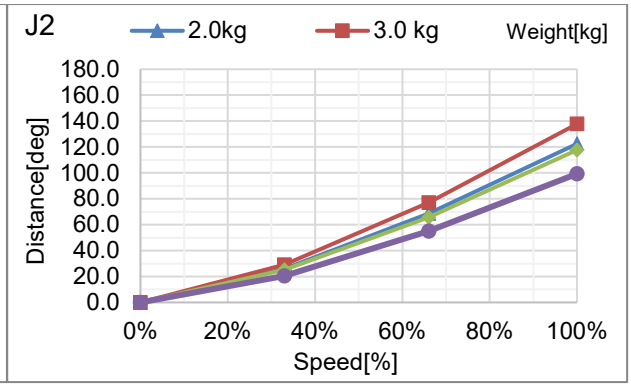

G6-45***: J3 (Table top mounting, Ceiling mounting, wall mounting)

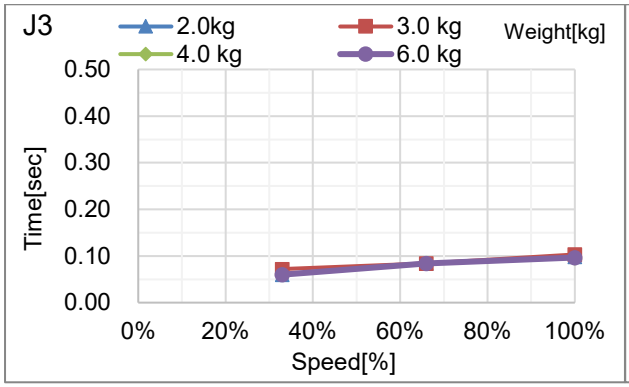

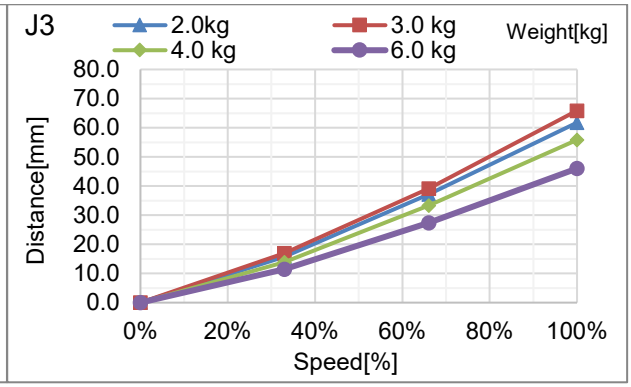

G6-55***: J1 (Table top mounting, Ceiling mounting, wall mounting)

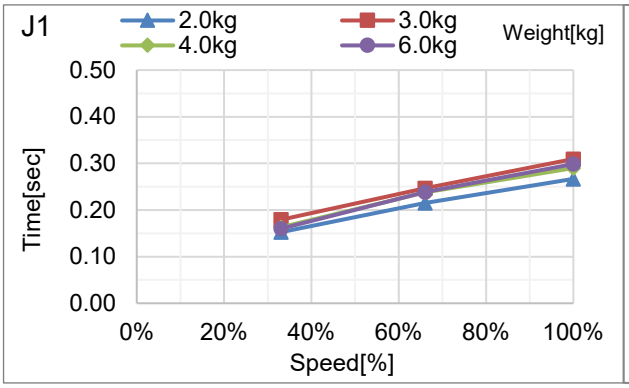

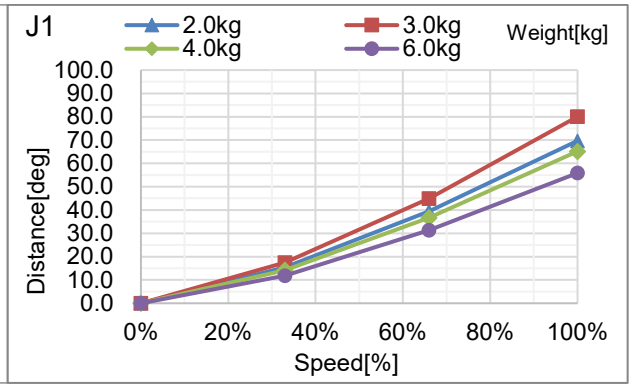

G6-55***: J2 (Table top mounting, Ceiling mounting, wall mounting)

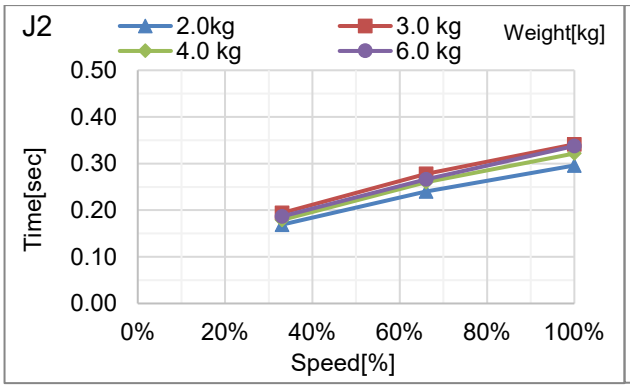

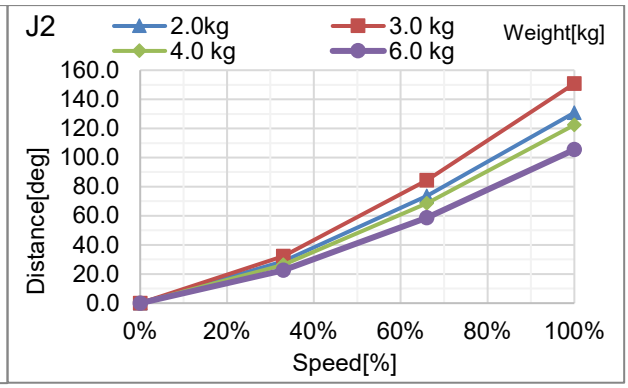

G6-55***: J3 (Table top mounting, Ceiling mounting, wall mounting)

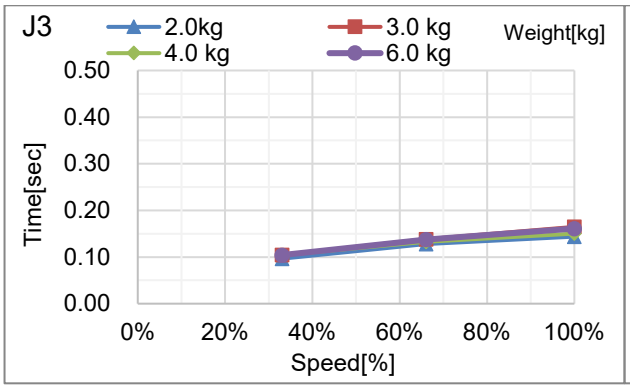

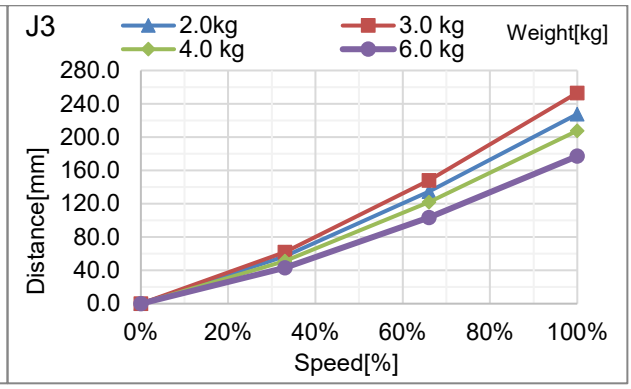

G6-65***: J1 (Table top mounting, Ceiling mounting, wall mounting)

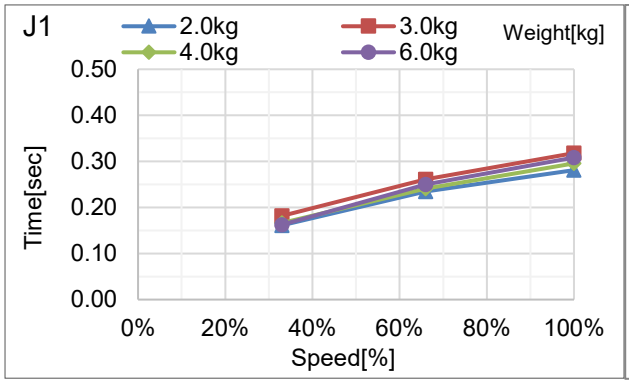

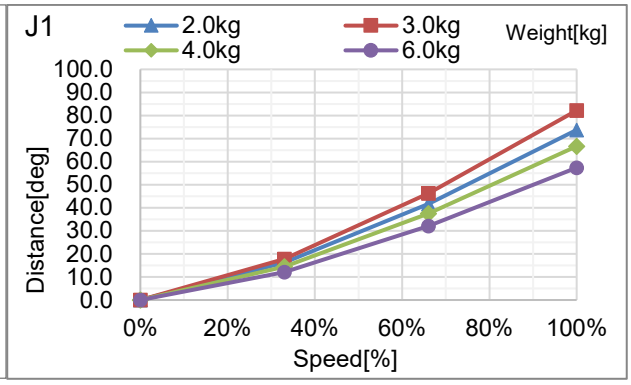

G6-65***: J2 (Table top mounting, Ceiling mounting, wall mounting)

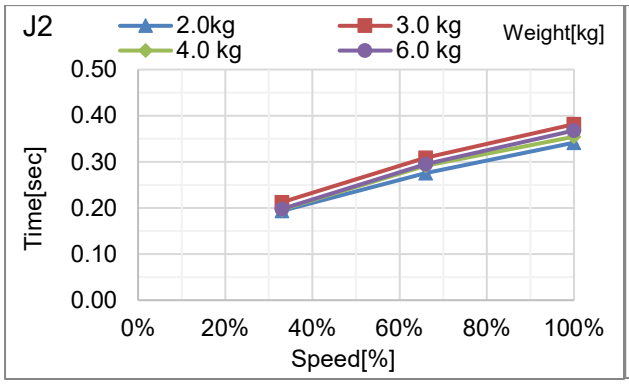

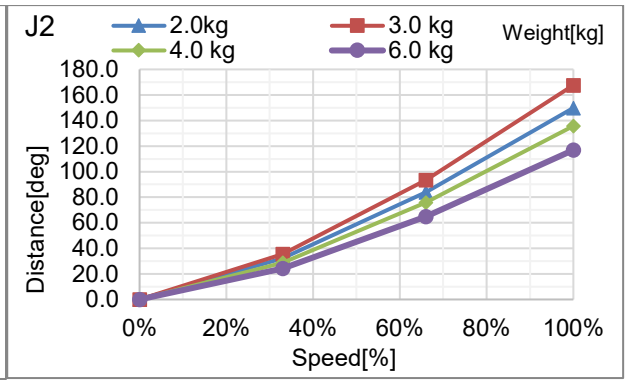

G6-65***: J3 (Table top mounting, Ceiling mounting, wall mounting)

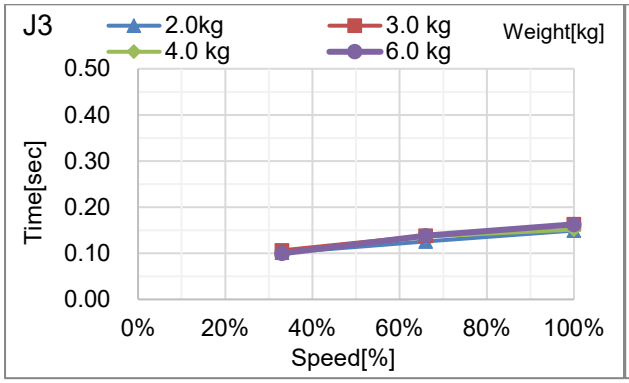

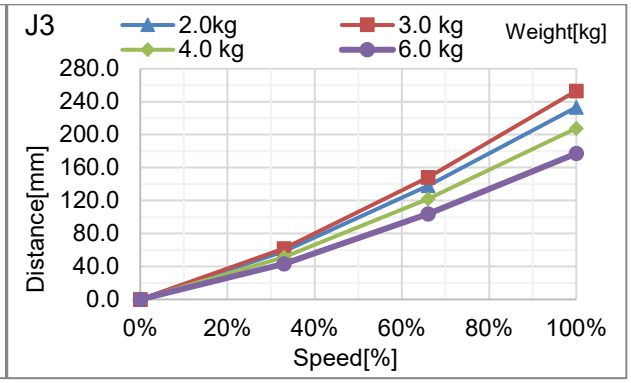

G10 Stopping time and Stopping distance When Safeguard Is Opened

G10-65***: J1 (Table top mounting, Ceiling mounting, wall mounting)

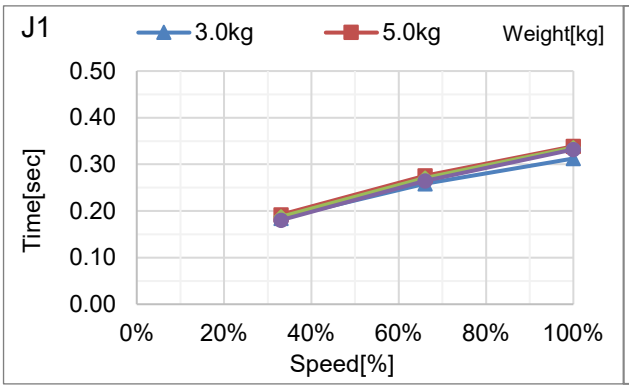

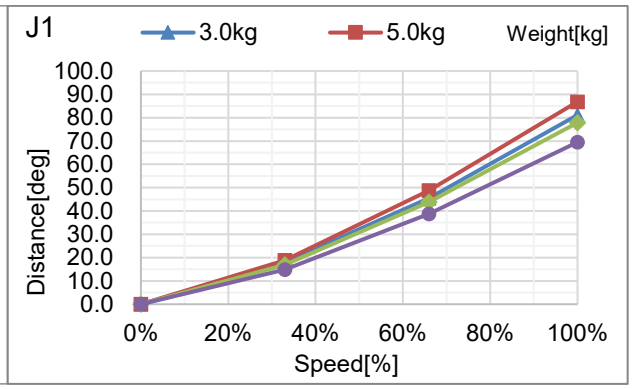

G10-65***: J2 (Table top mounting, Ceiling mounting, wall mounting)

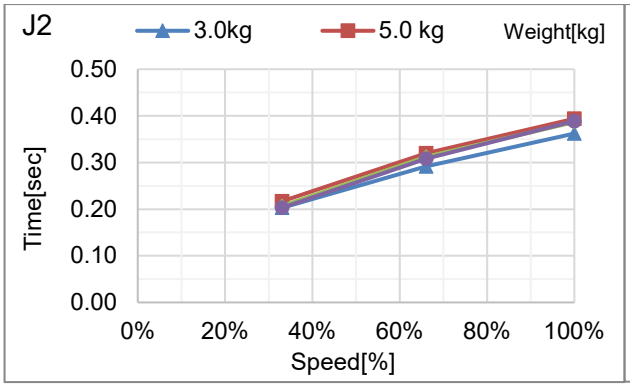

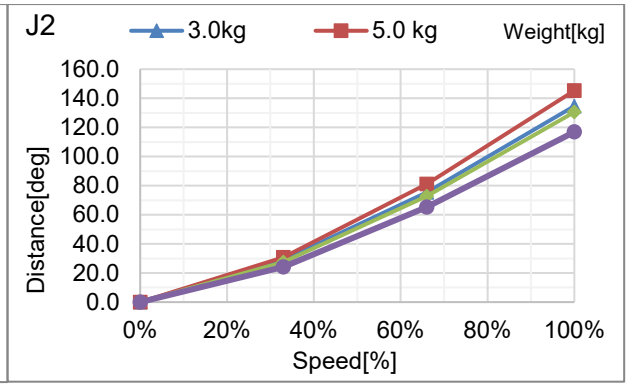

G10-65***: J3 (Table top mounting, Ceiling mounting, wall mounting)

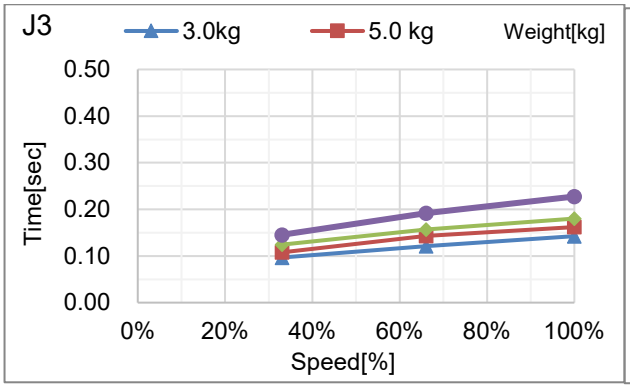

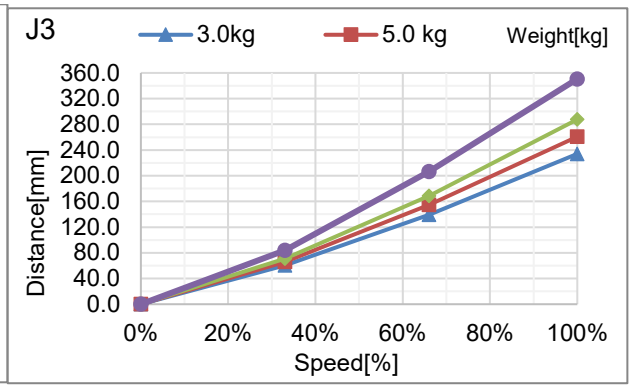

G10-85***: J1 (Table top mounting, Ceiling mounting, wall mounting)

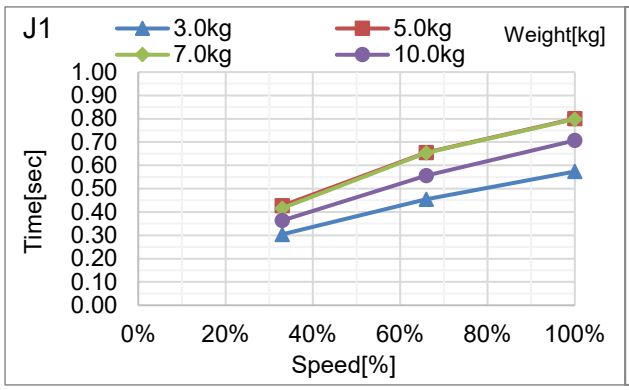

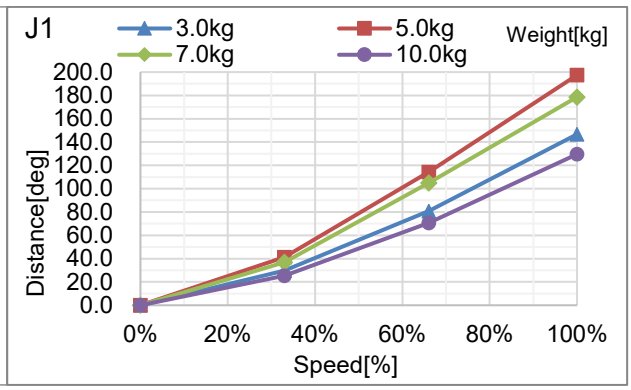

G10-85***: J2 (Table top mounting, Ceiling mounting, wall mounting)

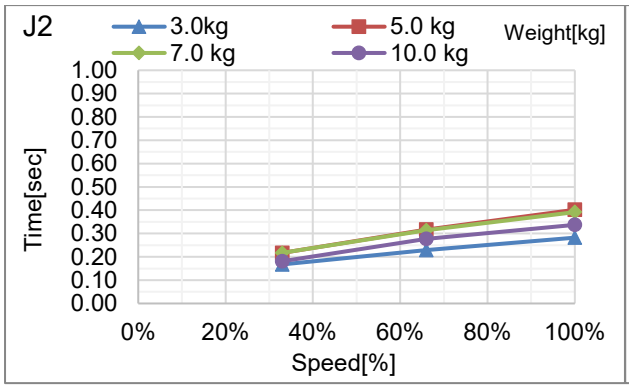

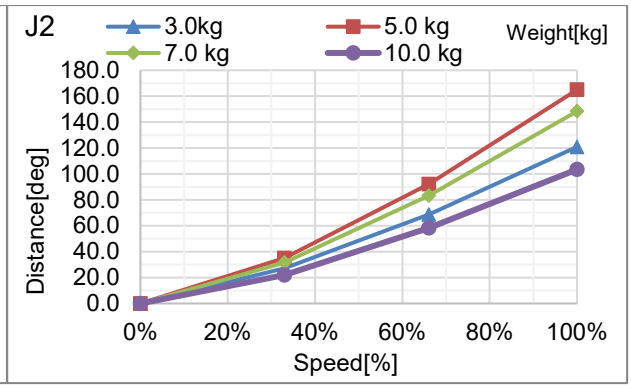

G10-85***: J3 (Table top mounting, Ceiling mounting, wall mounting)

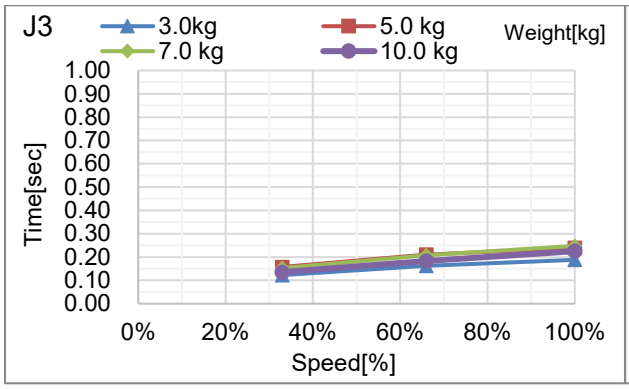

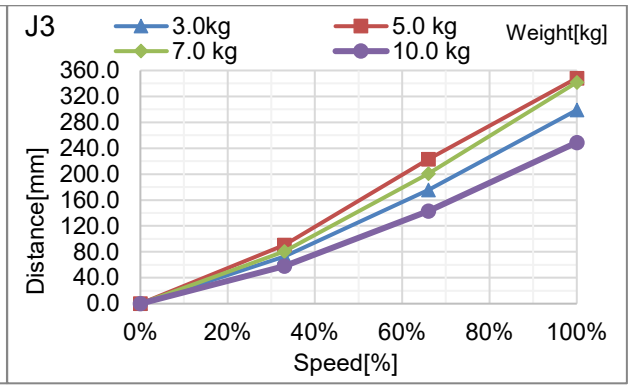

G20 Stopping time and Stopping distance When Safeguard Is Opened

G20-85***: J1 (Table top mounting, Ceiling mounting, wall mounting)

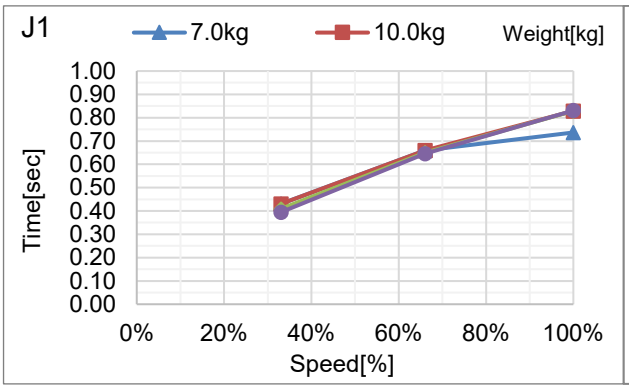

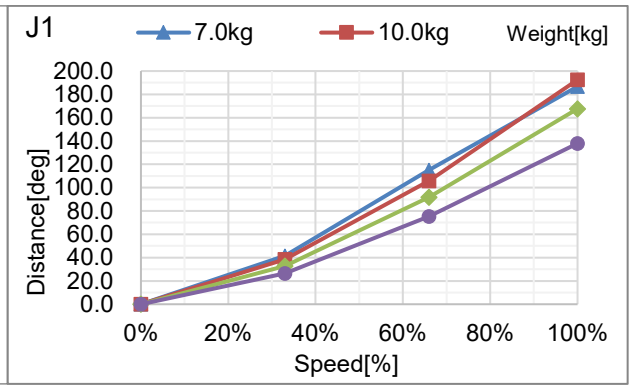

G20-85***: J2 (Table top mounting, Ceiling mounting, wall mounting)

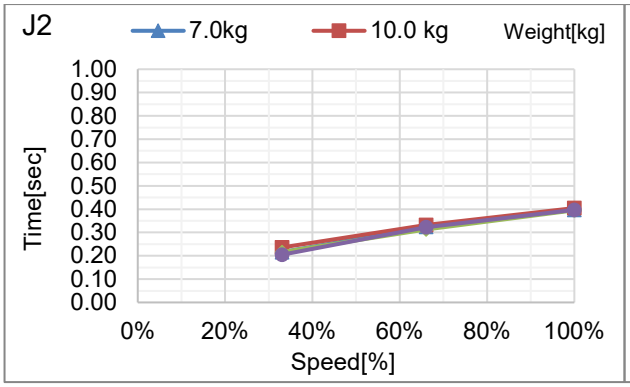

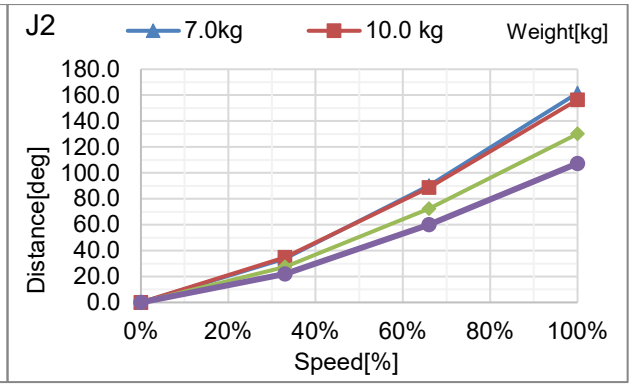

G20-85***: J3 (Table top mounting, Ceiling mounting, wall mounting)

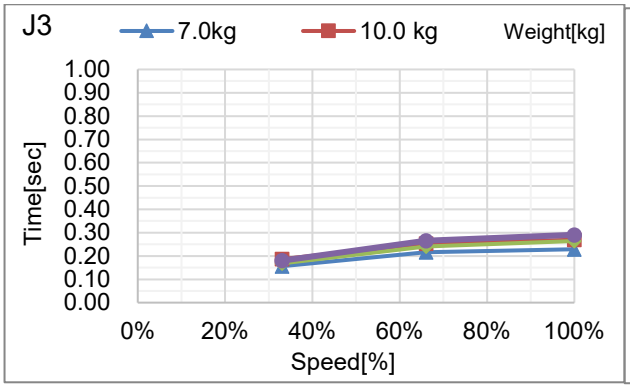

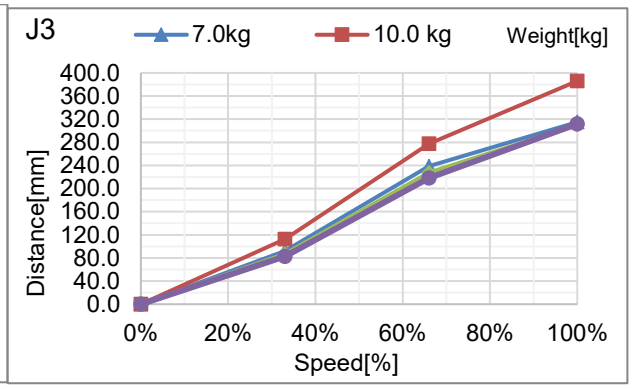

G20-A0***: J1 (Table top mounting, Ceiling mounting, wall mounting)

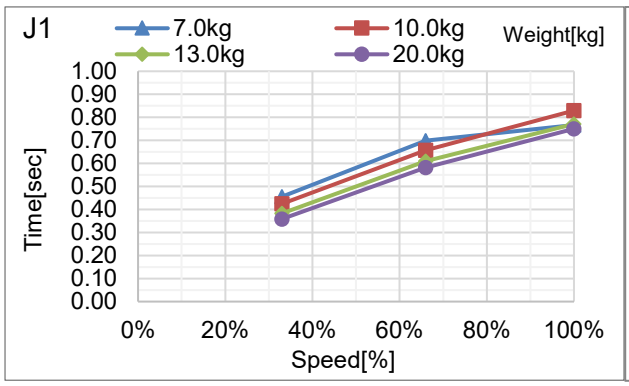

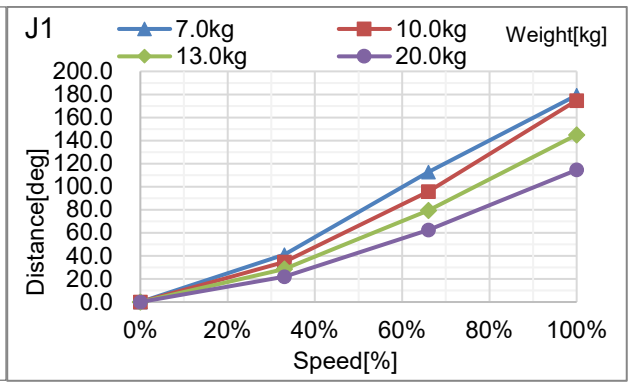

G20-A0***: J2 (Table top mounting, Ceiling mounting, wall mounting)

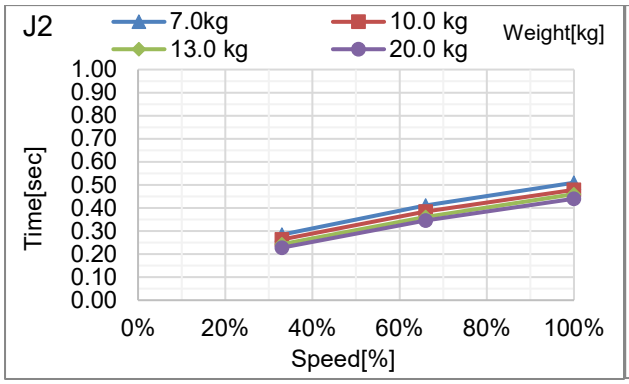

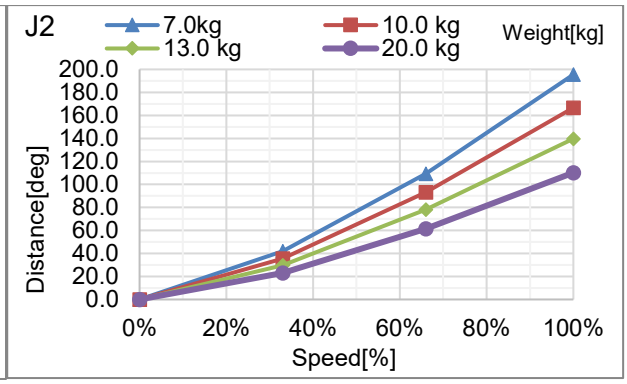

G20-A0***: J3 (Table top mounting, Ceiling mounting, wall mounting)