EPSON

EPSON ProSix

PS series

PS3 Manipulator

Rev.7 EM081R1652F

EPSON ProSix

PS series

PS3 Manipulator

Rev. 7

FOREWORD

Thank you for purchasing our robot products.
This manual contains the information necessary for the correct use of the manipulator.
Please carefully read this manual and other related manuals before installing the robot system.
Keep this manual handy for easy access at all times.

WARRANTY

The robot and its optional parts are shipped to our customers only after being subjected to the strictest quality controls, tests, and inspections to certify its compliance with our high performance standards.

Product malfunctions resulting from normal handling or operation will be repaired free of charge during the normal warranty period. (Please ask your Regional Sales Office for warranty period information.)

However, customers will be charged for repairs in the following cases (even if they occur during the warranty period):

1. Damage or malfunction caused by improper use which is not described in the manual, or careless use.
2. Malfunctions caused by customers' unauthorized disassembly.
3. Damage due to improper adjustments or unauthorized repair attempts.
4. Damage caused by natural disasters such as earthquake, flood, etc.

Warnings, Cautions, Usage:

1. If the robot or associated equipment is used outside of the usage conditions and product specifications described in the manuals, this warranty is void.
2. If you do not follow the WARNINGS and CAUTIONS in this manual, we cannot be responsible for any malfunction or accident, even if the result is injury or death.
3. We cannot foresee all possible dangers and consequences. Therefore, this manual cannot warn the user of all possible hazards.

TRADEMARKS

Microsoft, Windows, and Windows logo are either registered trademarks or trademarks of Microsoft Corporation in the United States and/or other countries. Other brand and product names are trademarks or registered trademarks of the respective holders.

NOTICE

No part of this manual may be copied or reproduced without authorization.
The contents of this manual are subject to change without notice.
Please notify us if you should find any errors in this manual or if you have any comments regarding its contents.

INQUIRIES

Contact the following service center for robot repairs, inspections or adjustments.
If service center information is not indicated below, please contact the supplier office for your region.

Please prepare the following items before you contact us.

- Your controller model and its serial number
- Your manipulator model and its serial number
- Software and its version in your robot system
- A description of the problem

SERVICE CENTER

MANUFACTURER & SUPPLIER

Japan & Others

SEIKO EPSON CORPORATION
Suwa Minami Plant
Factory Automation Systems Dept.
1010 Fujimi, Fujimi-machi,
Suwa-gun, Nagano, 399-0295
JAPAN
TEL : +81-(0)266-61-1802
FAX : +81-(0)266-61-1846

SUPPLIERS

North & South America

EPSON AMERICA, INC.
Factory Automation/Robotics
18300 Central Avenue
Carson, CA 90746
USA
TEL : +1-562-290-5900
FAX : +1-562-290-5999
E-MAIL : info@robots.epson.com

Europe

EPSON DEUTSCHLAND GmbH
Factory Automation Division
Otto-Hahn-Str.4
D-40670 Meerbusch
Germany
TEL : +49-(0)-2159-538-1391
FAX : +49-(0)-2159-538-3170
E-MAIL : robot.infos@epson.de

Before Reading This Manual

This section describes what you should know before reading this manual.

Structure of Control System

PS3 Manipulators can be used with the following combinations of Controllers and software.

The operating methods and descriptions are different depending on which software you are using. The following icons are put beside appropriate text as necessary. Use the descriptions that pertain to the software you are using.

Controller		Software
Type	Composition (Hardware)	
RC520	Control Unit Drive Unit	SPEL CT — SPEL CT
		EPSON RC+ — EPSON RC+ 4.* or before
RC170	Controller	EPSON RC+ — EPSON RC+ 5.0 or later

For details on commands, refer to “EPSON RC+ User’s Guide”, or “SPEL CT User’s Guide Setup & Operation”, or “On-line help”.

Turning ON/OFF Controller

When you see the instruction “Turn ON/OFF the Controller” in this manual, be sure to turn ON/OFF all the hardware components.

Differences in Terminology according to Software

Some expressions are different according to software.

SPEL CT

For SPEL CT, a coordinate point including the arm pose is defined as “pose”. The data is called “pose data”.

EPSON RC+

For EPSON RC+, a coordinate point including the arm pose is defined as “point”.
The data is called “point data”.

Photos and Illustrations Used in This Manual

The appearance of some parts may differ from those on an actual product depending on when it was shipped or the specifications. The procedures themselves, however, are accurate.

TABLE OF CONTENTS

Maintenance

Setup & Operation

This volume contains information for setup and operation of the Manipulators.

Please read this volume thoroughly before setting up and operating the Manipulators.

1. Safety

Installation and transportation of robots and robotic equipment shall be performed by qualified personnel and should conform to all national and local codes.
Please read this manual and other related manuals before installing the robot system or before connecting cables.
Keep this manual handy for easy access at all times.

1.1 Conventions

Important safety considerations are indicated throughout the manual by the following symbols. Be sure to read the descriptions shown with each symbol.

WARNING	This symbol indicates that a danger of possible serious injury or death exists if the associated instructions are not followed properly.
WARNING	This symbol indicates that a danger of possible harm to people caused by electric shock exists if the associated instructions are not followed properly.
CAUTION	This symbol indicates that a danger of possible harm to people or physical damage to equipment and facilities exists if the associated instructions are not followed properly.

1.2 Design and Installation Safety

Only trained personnel should design and install the robot system. Trained personnel are defined as those who have taken robot system training and maintenance training classes held by the manufacturer, dealer, or local representative company, or those who understand the manuals thoroughly and have the same knowledge and skill level as those who have completed the training courses.

To ensure safety, a safeguard must be installed for the robot system. For details on the safeguard, refer to the *Installation and Design Precautions* in the *Safety* chapter of the EPSON RC+ User's Guide or the *Safety 1.3 Design Precautions* in the SPEL CT User's Guide.

The following items are safety precautions for design personnel:

WARNING	■ Personnel who design and/or construct the robot system with this product must read the *Safety* chapter in the EPSON RC+ User's Guide or the *Safety* part in the SPEL CT User's Guide to understand the safety requirements before designing and/or constructing the robot system. Designing and/or constructing the robot system without understanding the safety requirements is extremely hazardous, and may result in serious bodily injury and/or severe equipment damage to the robot system. ■ The Manipulator and the Controller must be used within the environmental conditions described in their respective manuals. This product has been designed and manufactured strictly for use in a normal indoor environment. Using the product in an environment that exceeds the specified environmental conditions may not only shorten the life cycle of the product but may also cause serious safety problems. ■ The robot system must be used within the installation requirements described in the manuals. Using the robot system outside of the installation requirements may not only shorten the life cycle of the product but also cause serious safety problems.

Further precautions for installation are mentioned in the chapter *Setup & Operation 3. Environment and Installation*. Please read this chapter carefully to understand safe installation procedures before installing the robots and robotic equipment.

1.3 Operation Safety

The following items are safety precautions for qualified Operator personnel:

WARNING	■ Please carefully read the *Safety-related Requirements* in the *Safety* chapter of the EPSON RC+ User's Guide or the *Safety 1.1 Safety-related Requirements* in the SPEL CT User's Guide before operating the robot system. Operating the robot system without understanding the safety requirements is extremely hazardous and may result in serious bodily injury and/or severe equipment damage to the robot system. ■ Do not enter the operating area of the Manipulator while the power to the robot system is turned ON. Entering the operating area with the power ON is extremely hazardous and may cause serious safety problems as the Manipulator may move even if it seems to be stopped. ■ Before operating the robot system, make sure that no one is inside the safeguarded area. The robot system can be operated in the mode for teaching even when someone is inside the safeguarded area. The motion of the Manipulator is always in restricted status (low speeds and low power) to secure the safety of an operator. However, operating the robot system while someone is inside the safeguarded area is extremely hazardous and may result in serious safety problems in case that the Manipulator moves unexpectedly. ■ Immediately press the Emergency Stop switch whenever the Manipulator moves abnormally while the robot system is operated. Continuing the operating the robot system while the Manipulator moves abnormally is extremely hazardous and may result in serious bodily injury and/or severe equipment change to the robot system.

WARNING	■ Be sure to connect the AC power cable to a power receptacle. DO NOT connect it directly to a factory power source. To shut off power to the robot system, pull out the power plug from the power source. Performing any work while connecting the AC power cable to a factory power source is extremely hazardous and may result in electric shock and/or malfunction of the robot system. ■ Before performing any replacement procedure, turn OFF the Controller and related equipment, and then pull out the power plug from the power source. Performing any replacement procedure with the power ON is extremely hazardous and may result in electric shock and/or malfunction of the robot system. ■ Do not insert or pull out the motor connectors while the power to the robot system is turned ON. Inserting or pulling out the motor connectors with the power ON is extremely hazardous and may result in serious bodily injury as the Manipulator may move abnormally, and also may result in electric shock and/or malfunction of the robot system.

1.4 Emergency Stop

If the Manipulator moves abnormally during operation, immediately press the Emergency Stop switch. The motor power will be turned OFF, and the arm motion by inertia will be stopped with the electromagnetic brake and dynamic brake.

However, avoid pressing the Emergency Stop switch unnecessarily while the Manipulator is running normally. Otherwise, the Manipulator may hit the peripheral equipment since the operating trajectory while the robot system stops is different from that in normal operation.
To place the robot system in emergency mode during normal operation, press the Emergency Stop switch when the Manipulator is not moving.
Refer to the Controller manual for instructions on how to wire the Emergency Stop switch circuit.

Free running distance in emergency

The operating Manipulator cannot stop immediately after the Emergency Stop switch is pressed.
However, remember that the values vary depending on conditions such as the weight of the end effector and work piece, WEIGHT/SPEED/ACCEL settings, operating pose, etc.
The free running time/angle/distance of the Manipulator are shown below.

Conditions of Measurement

ACCEL Setting	100
SPEED Setting	100
Load [kg]	5
WEIGHT Setting	5

		RC520	RC170
Free running time [sec.]	Arm #J1	0.4	0.6
	Arm #J2	0.4	0.5
	Arm #J3	0.5	0.5
	Arm #J4	0.9	0.5
	Arm #J5	0.5	0.6
	Arm #J6	0.5	0.6
Free running angle [deg.]	Arm #J1	20	35
	Arm #J2	25	30
	Arm #J3	25	40
	Arm #J4	15	25
	Arm #J5	35	55
	Arm #J6	25	45

NOTE

The free running distance of RC170 differs from RC520/RC420 for the differences of the braking process.
RC170 stops with the electromagnetic brake and dynamic brake after the deceleration motion as Quick Pause to keep the operating trajectory while the robot system stops for safety.
Because of this, RC170 may increase the free running distance compared to RC520/RC420 that stop instantly with the electromagnetic brake and dynamic brake at emergency.

1.5 How to Move Arms the Electromagnetic Brake is Applied to

When the electromagnetic brake is applied to all arms (such as emergency mode), you cannot move any arm by pushing it manually.

There are two methods to release the electromagnetic brake. Follow either method to release the electromagnetic brake and move the arms manually.

1.5.1 Moving the Arm Using the Brake Release Unit
Follow the method when you just unpack the delivered boxes or when the Controller does not start up yet.

1.5.2 Moving the Arm Using the Software
Follow the method when you can use the software.

Arm Motion

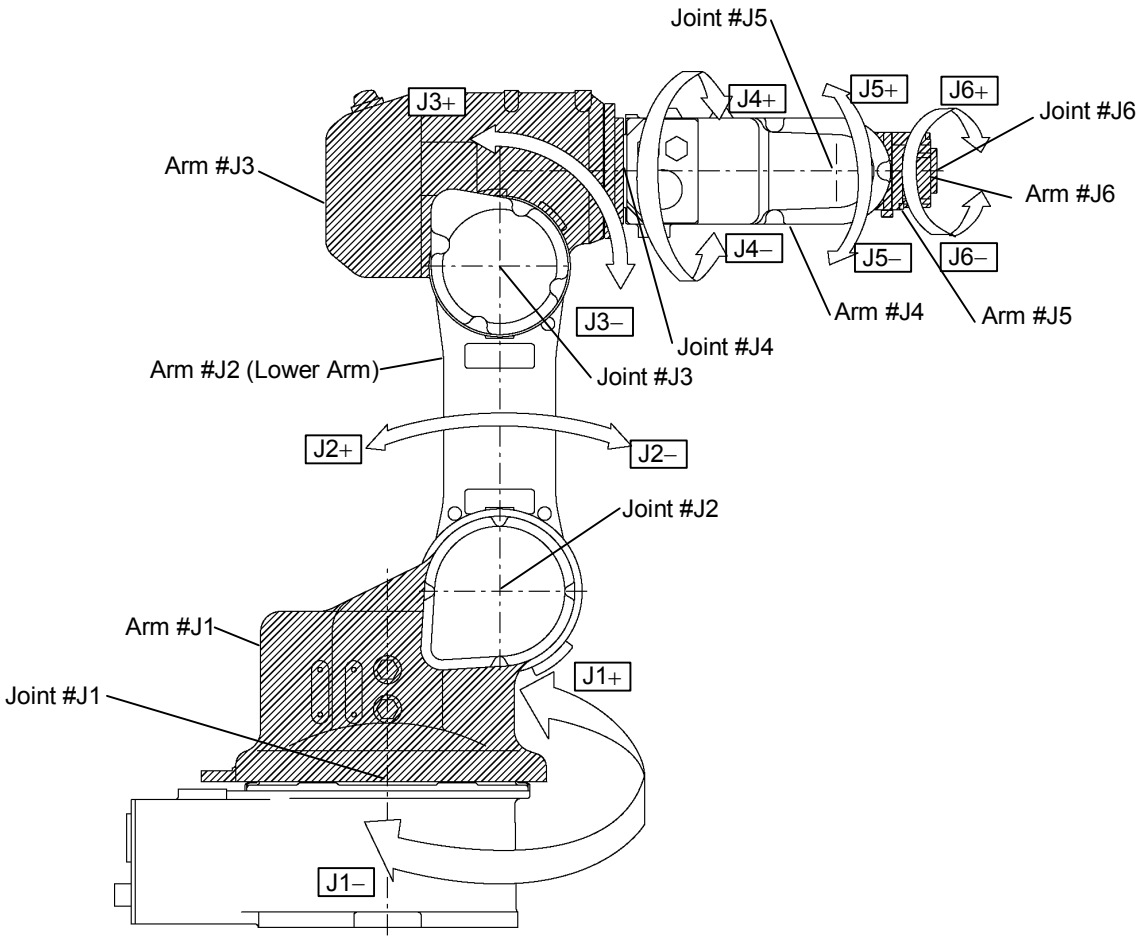

1.5.1 Moving the Arm Using the Brake Release Unit

NOTE

The brake release unit is a standard accessory for UL conformance Manipulator type (PS3-AS00-UL). For the other Manipulator type (PS3-AS00), however, it is an optional accessory.

WARNING	■ Turn OFF the brake release unit before inserting or pulling out the connectors of the brake release unit. Inserting or pulling out the connectors with the power ON is extremely hazardous and may result in electric shock and/or malfunction of the robot system.

CAUTION	■ Normally, release the brake of a single joint at a time. Take extra care to release the brakes of two or more joints simultaneously from necessity. Releasing the brakes of two or more joints simultaneously may cause hands and fingers to be caught and/or equipment damage to or malfunction of the Manipulator as the arms of the Manipulator may move in unexpected directions. ■ Be careful of the arm falling when releasing the brake. While the brake release switch is being pressed, the Manipulator's arm falls by its own weight. The arm falling may cause hands and fingers to be caught and/or may cause equipment damage to or malfunction of the Manipulator.

Installation

(1) Turn OFF the Controller.

(2) Push up the connector lock lever to unlock the power cable connector.

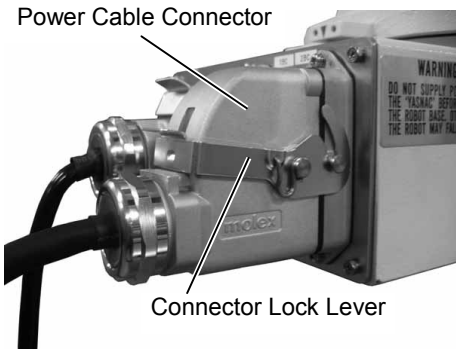

CAUTION	■ Be careful not to get hands or fingers caught while pushing up the connector lock lever. The connector lock lever is very tight but it gets loose suddenly while you are pushing it up.

(3) Pull out the power cable connector from the power connector on the rear of the Manipulator.

(4) Insert the brake release unit connector to the power connector.

(5) Push down the connector lock lever to lock the brake release unit connector.

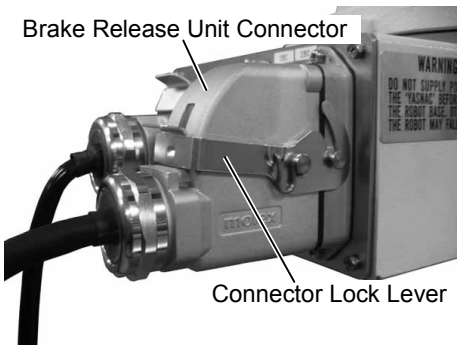

CAUTION	■ Be careful not to get hands or fingers caught while pushing down the connector lock lever because you should apply strong force to it.

(6) Insert the power supply cable to the brake release unit.

(7) Turn ON the brake release unit.
(The power indicator lamp lights up.)

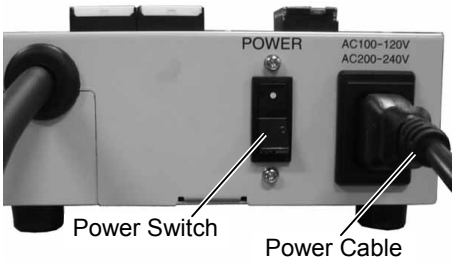

(8) Open the switch cover and press the brake release switch. (The brake release switch lights up in yellow and all the switches of respective arms (J1 to J6) get ready.)

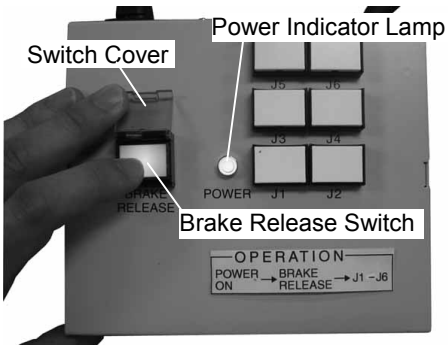

(9) Move the arm while pressing the switch corresponding to the arm.
(You can release the brake while keeping pressing the corresponding switch.)

NOTE

To move the arm while releasing the brake, have two or more people to work on it. One should press the switch and the others should move the arm. Moving the heavy arm while releasing the brake may need considerable force.

CAUTION	■ Be careful of the arm falling when releasing the brake. The arm will fall by its own weight while the brake release switch is being pressed. The arm falling may cause hands and fingers to be caught and/or may cause equipment damage to or malfunction of the Manipulator.

CAUTION	■ Immediately stop the Manipulator operation and contact your distributor when the arm whose brake is released does not fall smoothly or its falling speed is faster than usual. Continuing the operation under such conditions may cause hands and fingers to be caught and/or may cause equipment damage to or malfunction of the Manipulator as the brake release unit may malfunction.

Removal

(1) Press the brake release switch.
(The brake release switch lights off.)

(2) Turn OFF the brake release unit.

(3) Pull out the power cable from the brake release unit.

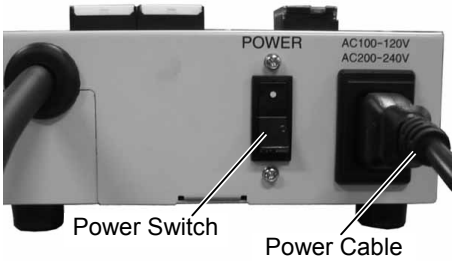

(4) Push up the connector lock lever to unlock the brake release unit connector.

CAUTION	■ Be careful not to get hands or fingers caught while pushing up the connector lock lever. The connector lock lever is very tight but it gets loose suddenly while you are pushing it up.

(5) Pull out the brake release unit connector from the power connector on the rear of the Manipulator.

(6) Insert the power cable connector to the power connector.

(7) Push down the connector lock lever to lock the power cable connector.

CAUTION	■ Be careful not to get hands or fingers caught while pushing down the connector lock lever because you should apply strong force to it.

(8) Turn ON the Controller.

1.5.2 Moving the Arm Using the Software

CAUTION	■ Normally, release the brake of a single joint at a time. Take extra care to release the brakes of two or more joints simultaneously from necessity. Releasing the brakes of two or more joints simultaneously may cause hands and fingers to be caught and/or equipment damage to or malfunction of the Manipulator as the arms of the Manipulator may move in unexpected directions. ■ Be careful of the arm falling when releasing the brake. While the brake is being released, the Manipulator's arm falls by its own weight. The arm falling may cause hands and fingers to be caught and/or may cause equipment damage to or malfunction of the Manipulator. ■ Before releasing the brake, be sure to keep the Emergency Stop switch handy so that you can immediately press the Emergency Stop switch. If you cannot immediately press the Emergency Stop switch, you have no means to stop the arms urgently when a wrong operation causes the arm to fall. The arm falling may cause equipment damage to and/or malfunction of the Manipulator.

SPEL CT

After releasing the Emergency Stop switch, enter the following commands in the [Command Execution] window.

`RESET`

`BFREE` [the number (from 1 to 6) corresponding to the arm whose brake will be turned off]

Execute the following command to turn on the brake again.

`BLOCK` [The number (from 1 to 6) corresponding to the arm whose brake will be turned on]

EPSON RC+

After releasing the Emergency Stop switch, Execute the following commands.

[Monitor Window] EPSON RC+ 4.* or before (RC520)

[Command Window] EPSON RC+ 5.0 or later (RC170)

`>Reset`

`>Brake Off,`[the number (from 1 to 6) corresponding to the arm whose brake will be turned off]

Execute the following command to turn on the brake again.

`>Brake On,`[The number (from 1 to 6) corresponding to the arm whose brake will be turned on]

1.6 Precaution for Operation in Low Power Status

When the power mode is low, the Manipulator will operate at low speed and low torque. However, comparatively high torque is generated under some circumstances so that the Manipulator can support its own weight. The maximum torque of each joint in the low power status is shown in the following table "Max. Joint Torque in Low Power Status".
Even though the Manipulator is in the low power status, carefully operate the Manipulator since a comparatively high joint torque may be generated. Be careful not to get hands or fingers caught during operations. The Manipulator may also collide with peripheral equipment and it may cause equipment damage to or malfunction of the Manipulator.

Max. Joint Torque in Low Power Status [Unit: N·m]

Joint	J1	J2	J3	J4	J5	J6
Joint Torque	114.6	152.8	57.6	19.2	19.2	12.0

CAUTION	■ Carefully operate the Manipulator even though it is in the low power status. A comparatively high joint torque may be generated. The comparatively high joint torque may cause hands and fingers to be caught and/or may cause equipment damage to or malfunction of the Manipulator as it may collide with peripheral equipment.

1.7 Manipulator Labels

The following labels are attached around the locations of the Manipulator where specific dangers exist.

Be sure to comply with descriptions and warnings on the labels to operate and maintain the Manipulator safely.

Do not tear, damage, or remove the labels. Use meticulous care when handling those parts or units to which the following labels are attached as well as the nearby areas:

Location of Labels	Labels	Location of Labels	Labels
(1)	WARNING NOTE: Hazardous voltage exists while the Manipulator is ON. To avoid electric shock, do not touch any internal electric parts.	(5)	WARNING 1. Do not lift without the shipping brackets. 2. To pick up the manipulator arm, use two wireropes of equal length connected to eyebolts on the J3 arm. 3. Remove the shipping brackets and eyebolts before turning power on. 4. Follow the instruction manual during lifting / transportation. Eyebolts, Wireropes, Weight 45 Kg 100 lb., Brackets
(2)	WARNING Moving parts may cause injury		
(3)	WARNING Do not enter robot work area.	(6)	WARNING Arm weight may cause arm to fall after release of brakes. EMERGENCY BRAKE RELEASE 1. Turn off the controller. 2. Remove the power cable (2BC). 3. Connect the brake release unit (2BC). 4. Operate the brake release unit using instructions on the brake release unit.
(4)	CAUTION 1. Arm weight may cause arm to fall during service / installation. 2. Follow the instruction manual during service / installation.		

Location of Labels

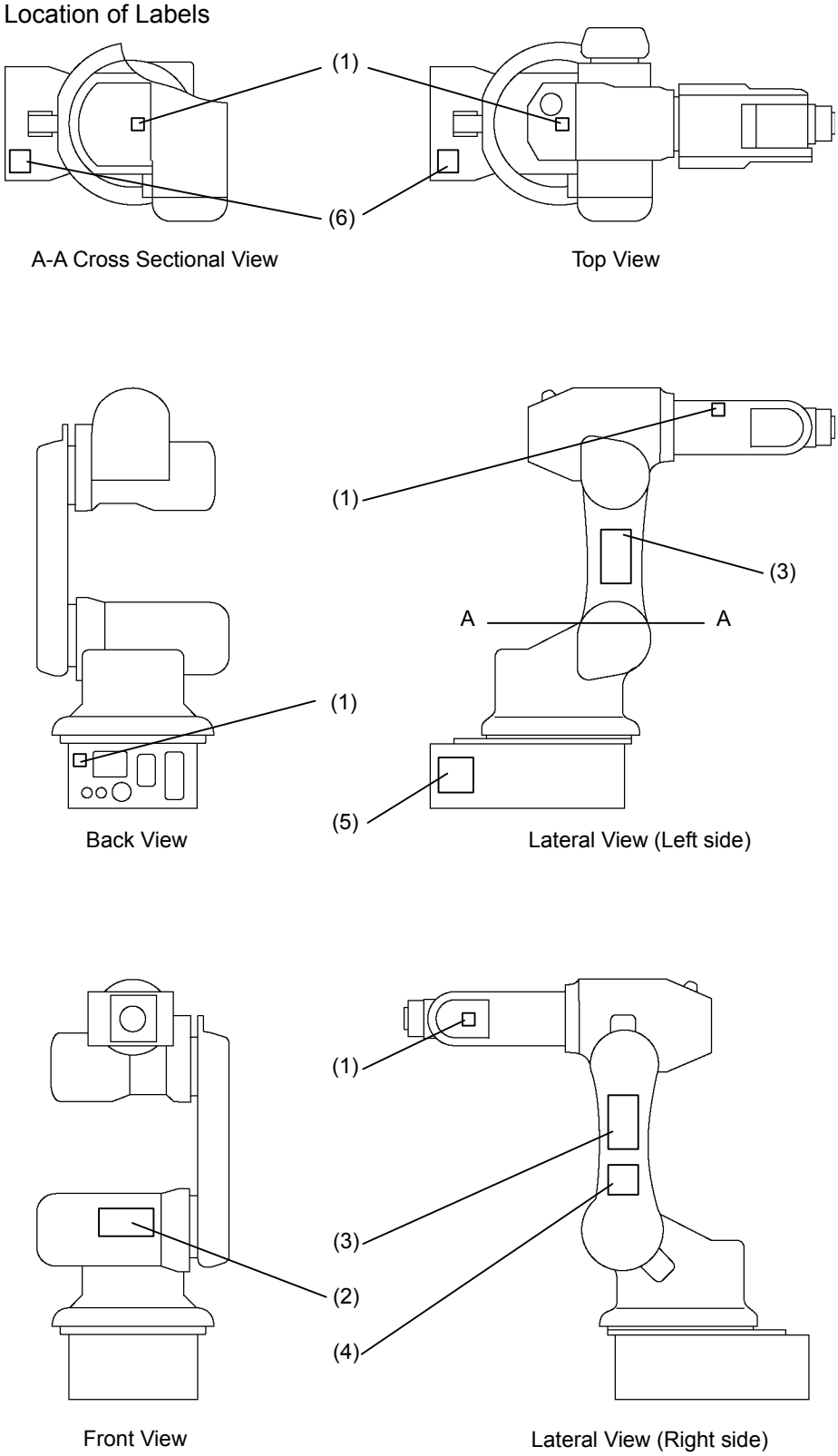

2. Specifications

2.1 Features of Manipulators

(1) High-speed and high-accuracy control

PS3 Manipulators are controlled at high speed and high accuracy by techniques we have acquired while improving our SCARA robots.

- PS3 Manipulators move at high speed and stop at target points as you desire.
- High-speed and high-accuracy positioning shortens cycle time.
- Maximum operating speed has been improved at the highest level for the small industrial robot industry.
- Residual vibration has been decreased.
- Improved rigidity of the arms reduces vibration and deflection of the Manipulator.
- PS3 Manipulators hold position with great stability.

(2) High-accuracy trajectory control

The accuracy of CP trajectory control has been improved so that you can operate the Manipulator with more flexibility while taking advantage of six degrees of freedom.

(3) Available for large payloads

Large allowable moment of inertia has made it possible to support relatively large payloads.

Optimal control for payload by using the WEIGHT and INERTIA commands make handling large payloads more stable.

UL1740 Conformance Type

UL1740 is the Standard for Industrial Robots and Robotic Equipment established by Underwriters Laboratories Inc. (UL). The UL1740 conformance product has a safety mark which shows that Underwriters Laboratories Inc. (UL) has recognized it.
In the United States, the robot system is recommended to be used with the Manipulators and Controller that conform to UL1740 in accordance with ANSI/RIA R15.06.

2.2 Model Number

PS3 - AS00 - UL

- With "-UL" : UL1740 conformance
- Without "-UL" : UL1740 nonconformance

2.3 Appearance

Part Names and Motion Range of Each Arm

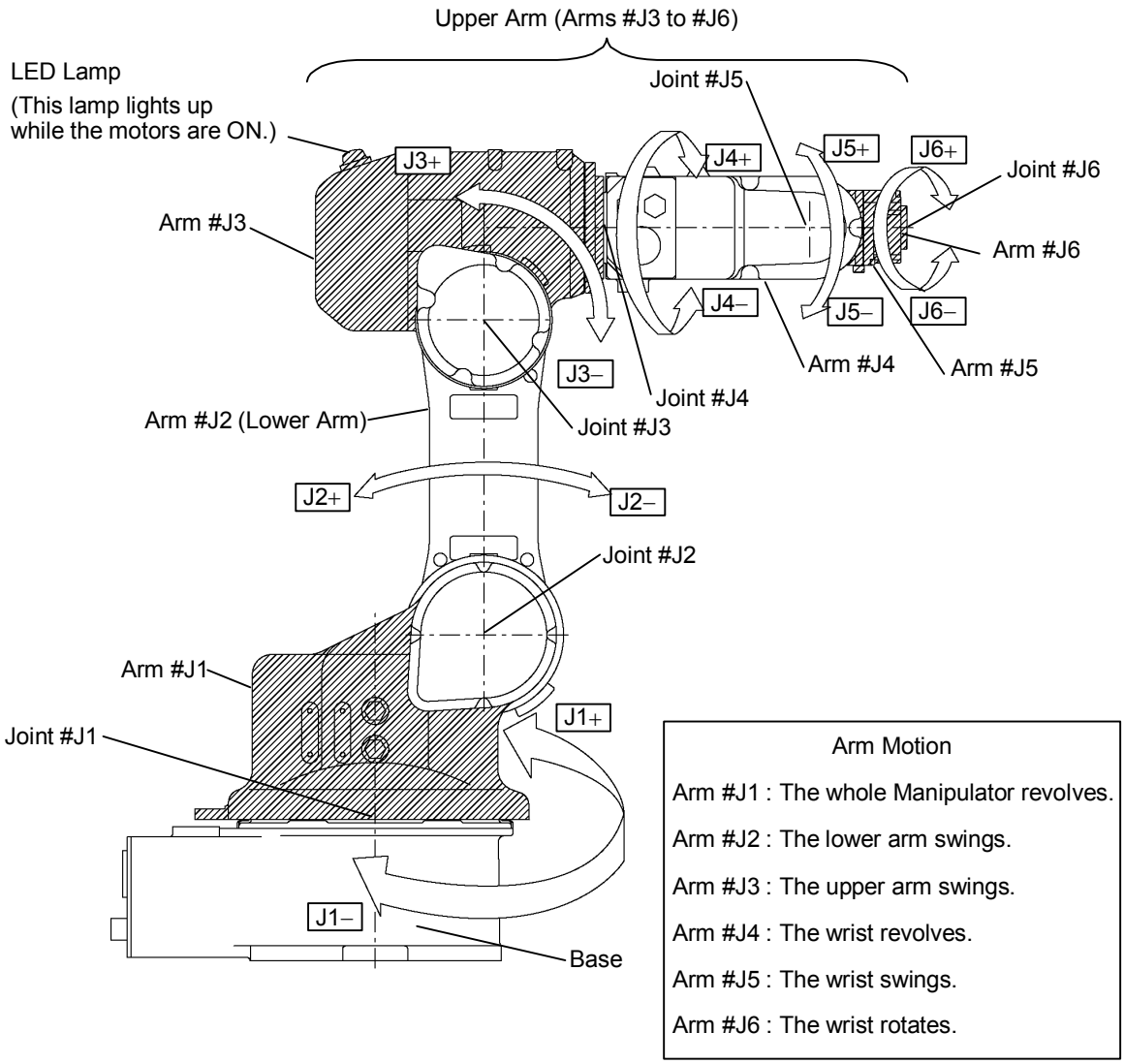

Arm Motion
Arm #J1 : The whole Manipulator revolves.
Arm #J2 : The lower arm swings.
Arm #J3 : The upper arm swings.
Arm #J4 : The wrist revolves.
Arm #J5 : The wrist swings.
Arm #J6 : The wrist rotates.

Details of Connector Plate (View A)

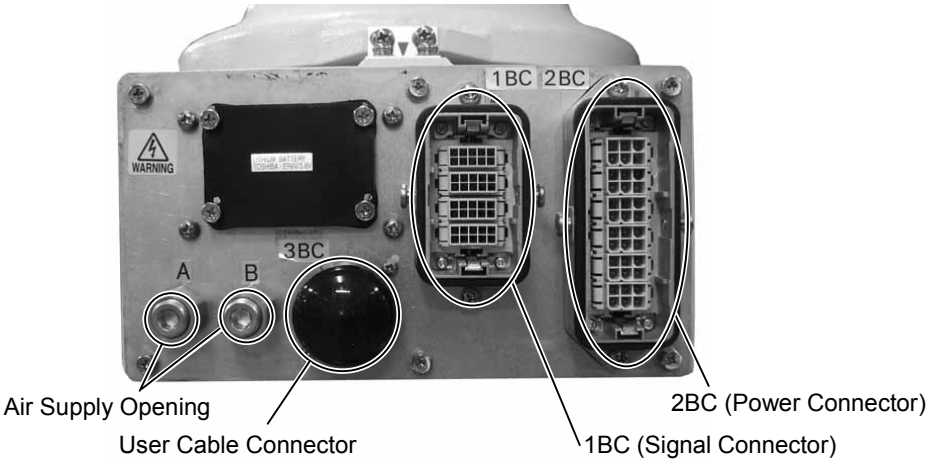

Outer Dimensions

[Unit: mm]

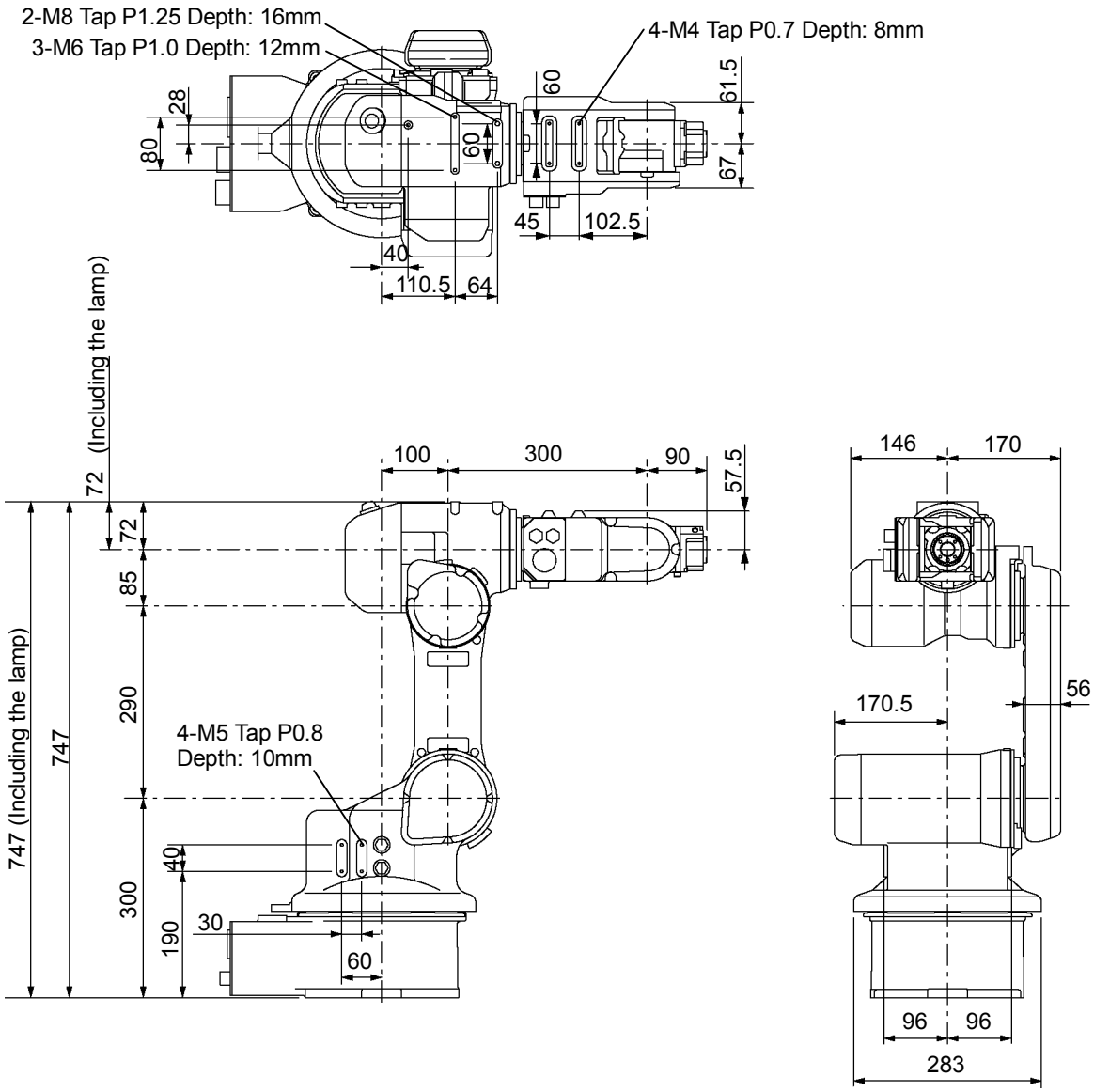

Standard Motion Range

Top View

[Unit: mm]
(° = deg.)

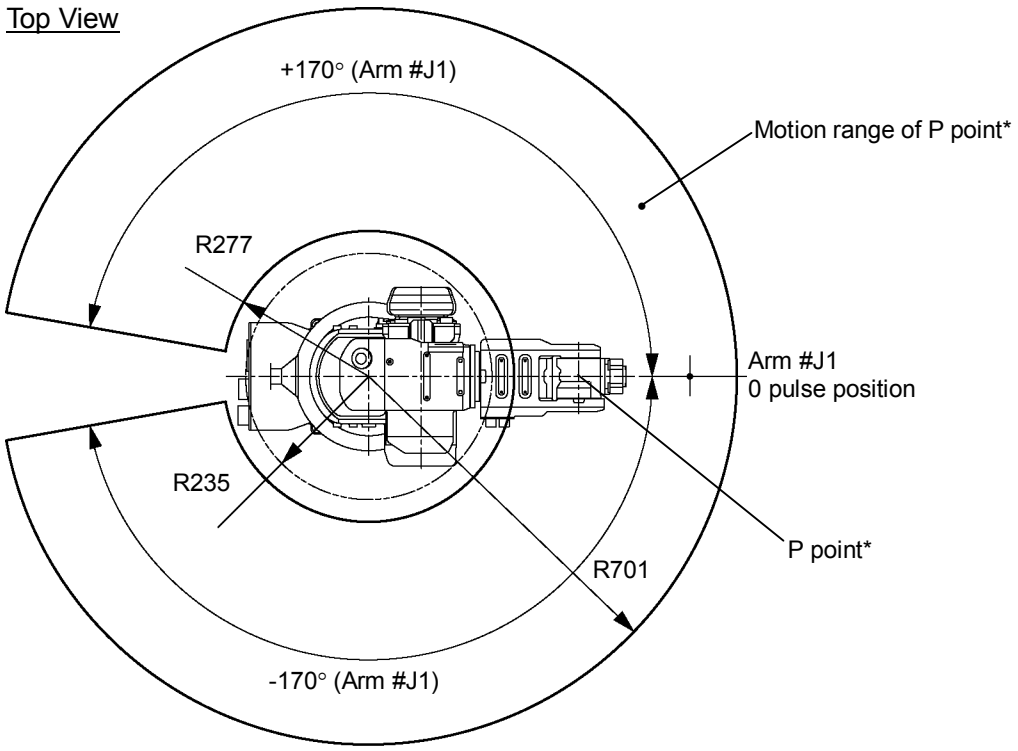

Lateral View

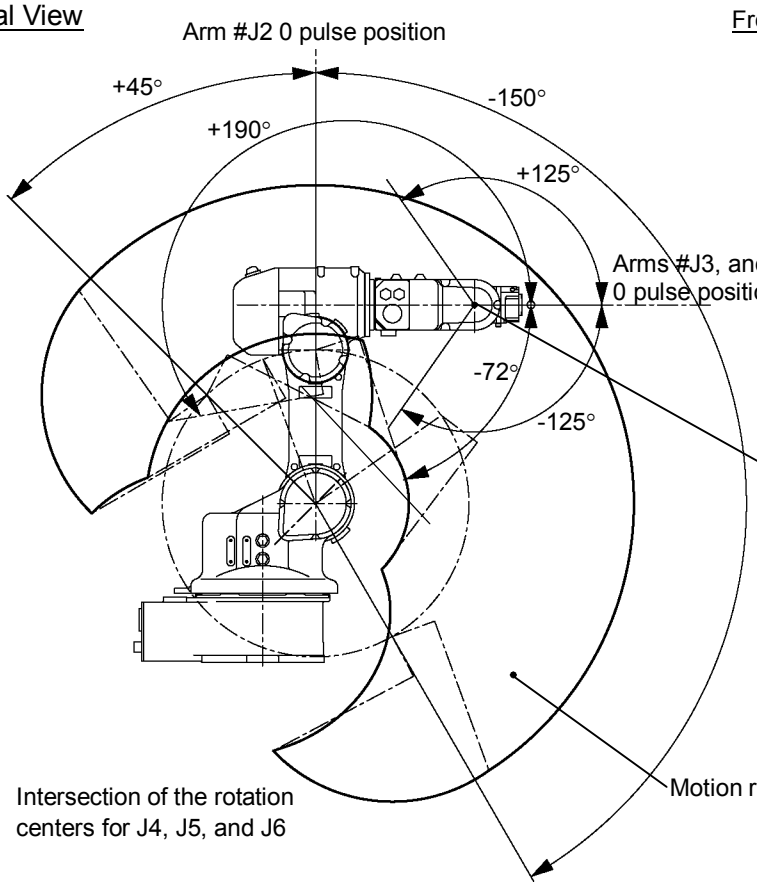

Front View

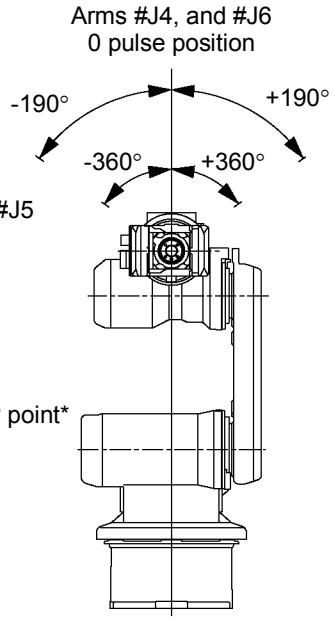

* P point: Intersection of the rotation centers for J4, J5, and J6

Standard Motion Range (Details of Lateral View)

[Unit: mm]

(° = deg.)

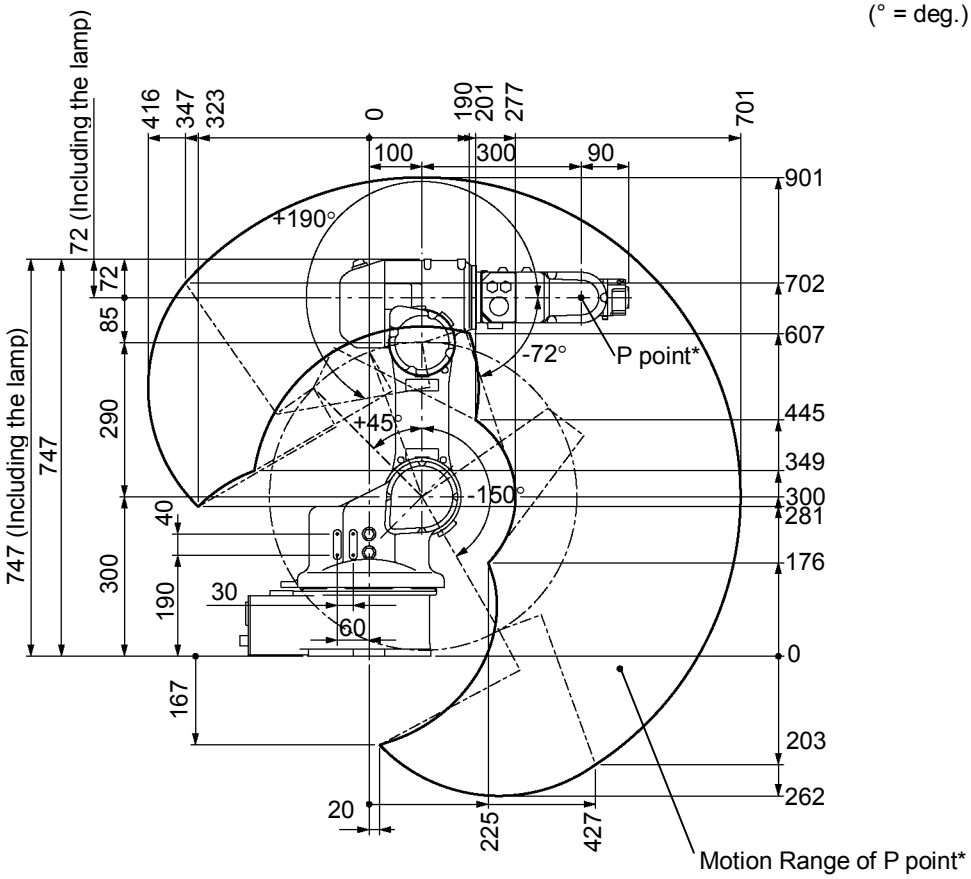

* P point: Intersection of the rotation centers for J4, J5, and J6

Arm #J5 Motion Range

CAUTION	Pay attention to the arm pose of the basic arms (Arms #J1, #J2, and #J3) when operating the Manipulator. Arm #J5 moves keeping a constant angle regardless of the arm pose. Depending on the arm pose of the basic arms, the wrist may collide with the Manipulator. The collision may cause equipment damage to and/or malfunction of the Manipulator.

(° = deg.)

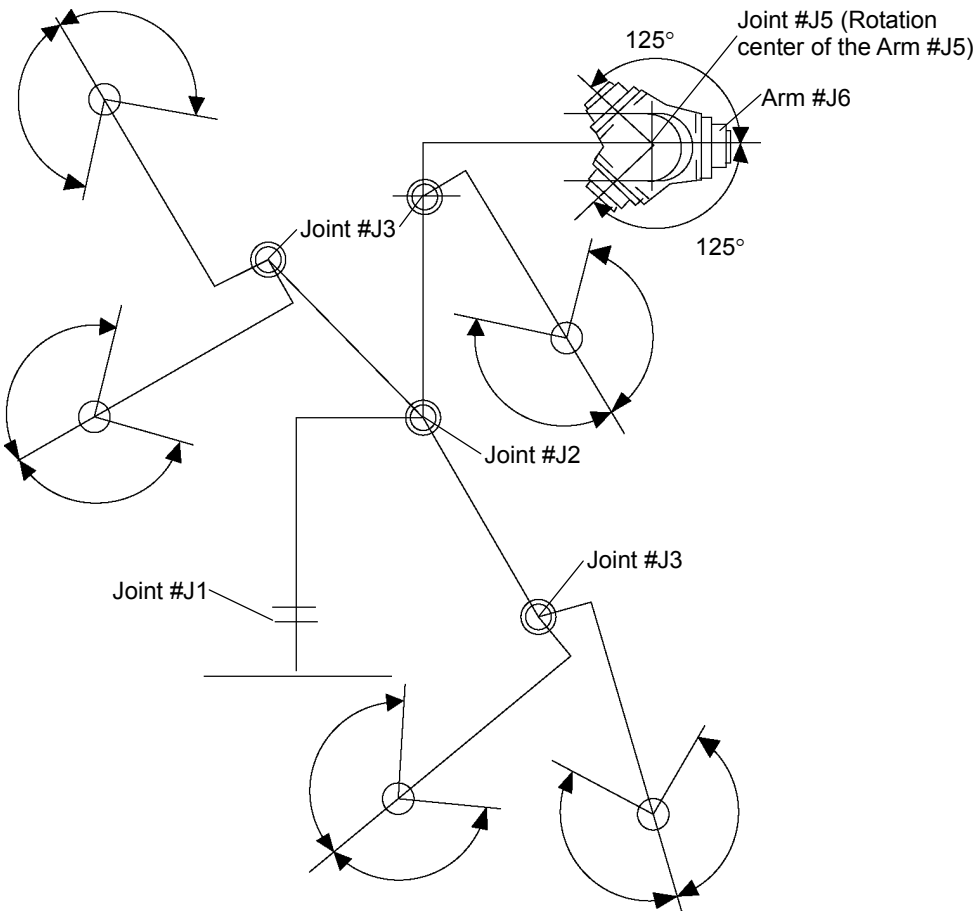

2.4 Specifications

2.4.1 Table

Item		Specification
Model Number		PS3-AS00
Weight (not include the weight of cables or shipping jigs)		45 kg (100 lb.)
Driving method	All arms	AC servo motor
Max. operating speed *1	Arm #J1	3.66 rad/s, 210 deg./s
	Arm #J2	3.14 rad/s, 180 deg./s
	Arm #J3	3.93 rad/s, 225 deg./s
	Arm #J4	6.54 rad/s, 375 deg./s
	Arm #J5	6.54 rad/s, 375 deg./s
	Arm #J6	8.73 rad/s, 500 deg./s
Repeatability	Arm #J1 to #J6	±0.03 mm
Max. motion range	Arm #J1	±170 deg.
	Arm #J2	+45 deg., –150 deg.
	Arm #J3	+190 deg., –72 deg.
	Arm #J4	±190 deg.
	Arm #J5	±125 deg.
	Arm #J6	±360 deg.
Max. pulse range	Arm #J1	±7427414
	Arm #J2	+2621440 –8738134
	Arm #J3	+8301227 –3145728
	Arm #J4	±5534152
	Arm #J5	±3640889
	Arm #J6	±6553600
Resolution	Arm #J1	0.00002289 deg./pulse
	Arm #J2	0.00001717 deg./pulse
	Arm #J3	0.00002289 deg./pulse
	Arm #J4	0.00003433 deg./pulse
	Arm #J5	0.00003433 deg./pulse
	Arm #J6	0.00005493 deg./pulse
Motor power consumption	Arm #J1	200 W
	Arm #J2	200 W
	Arm #J3	100 W
	Arm #J4	50 W
	Arm #J5	50 W
	Arm #J6	50 W
Payload *2	Rated	2 kg
	Max.	3 (5) kg
Allowable moment	Arm #J4	7.25N·m (0.74kgf·m)
	Arm #J5	7.25N·m (0.74kgf·m)
	Arm #J6	5.21N·m (0.53kgf·m)
Allowable moment of inertia ($GD^2/4$) *3	Arm #J4	0.3 kg·m^2
	Arm #J5	0.3 kg·m^2
	Arm #J6	0.1 kg·m^2
Wrist flange dimensions for end effector		ø40 (h6) mm ø20 (h6) mm

Item		Specification
Installed wire for customer use		16 wires
Installed pneumatic tube for customer use		2 pneumatic tubes (ø6 mm), Allowable pressure: 0.49Mpa (5kgf/cm^2) (71 psi)
Environmental requirements *4	Ambient Temperature	0 deg.C to 45 deg.C (with minimum temperature variation)
	Ambient relative humidity	20% to 80% (no condensation)
Equivalent continuous A-weighted sound pressure level *5		L_{Aeq} = 72.8 dB (A) or under
Applicable Controller		RC520, RC170
Default values (Max. setting values)	SPEED	4 (100)
	ACCEL	5, 5 (100, 100)
	SPEEDS	50 (2000)
	ACCELS	200 (25000)
	FINE	10000, 10000, 10000, 10000, 10000, 10000 (65535, 65535, 65535, 65535, 65535, 65535)
	WEIGHT	2, 0
Safety standard		ANSI/RIA R15.06 conformance CE conformance EN775, EN60204-1, EN55011, EN61000-6-2, EN60950 UL 1740 conformance PS3-AS00-UL (No compliance by RC170 adoption)

*1 In the case of PTP control

*2 When the setting payload is more than 3 kg and less than or equal to 5 kg, refer to the section "*Restrictions on payload exceeding 3 kg (more than 3 kg and less than or equal to 5 kg)*" in the *Setup & Operation 4.3.1 WEIGHT Setting*.

*3 In the case where the center of gravity is at the center of each arm. If the center of gravity is not at the center of each arm, set the eccentric quantity using INERTIA command.

*4 For details of the environmental requirements, refer to the *Setup & Operation 3.1 Environmental Conditions*.

*5 Conditions of Manipulator at measurement are as follows:
Operating conditions: Under rated load, 6 arms simultaneous motion, maximum speed, maximum acceleration, and duty 50%.
Measurement point: 1000 mm apart from the rear of Manipulator

2.4.2 Option Table

Item	Specification
Camera bracket (Option)	Refer to the section *"3.8 Camera Mounting"*
Variable mechanical stops for Arm #J2 and #J3 * (Option)	Refer to the section "5.2.2 Motion Range Setting of Arm #J2 and #J3 (Option)"

* The Manipulators equipped with the mechanical stop conform with the safety standard "ANSI/RIA R15.06"and "CE", but do not with "UL1740"

2.5 How to Set the Model

The Manipulator model for your system has been set before the shipment from the factory. It is normally not required to change the model when you receive your system.

CAUTION	■ When you need to change the setting of the Manipulator model, be sure to set the Manipulator model properly. Improper setting of the Manipulator model may result in abnormal or no operation of the Manipulator and/or cause safety problems.

NOTE

If an MT label is attached to the rear of a Manipulator, the Manipulator has custom specifications. If the Manipulator has custom specifications, the methods for setting the model may differ from those described below. Please contact us with the number on the MT label.

The method for setting the Manipulator model depends on the software used.
Refer to the chapter *Robot Configuration* in the EPSON RC+ User's Guide or the *Setup & Operation 11.5 Setting Up the Robot Manipulator* in the SPEL CT User's Guide.

3. Environment and Installation

Installation and transportation of robots and robotic equipment shall be performed by qualified personnel and should conform to all national and local codes.

3.1 Environmental Conditions

A suitable environment is necessary for the robot system to function properly and safely. Be sure to install the robot system in an environment that meets the following conditions:

Item	Conditions
Ambient temperature*	0 deg.C to 45 deg.C (with minimum temperature variation)
Ambient relative humidity	20% to 80% (no condensation)
First transient burst noise	2 kV or less
Electrostatic noise	6 kV or less
Environment	· Install indoors. · Keep away from direct sunlight. · Keep away from dust, oily smoke, salinity, metal powder or other contaminants. · Keep away from flammable or corrosive solvents and gases. · Keep away from water. · Keep away from shock or vibration. · Keep away from sources of electric noise.

* The ambient temperature conditions are for the Manipulators only. For the Controller the Manipulators are connected to, refer to the Controller manual.

NOTE ☞ When using the Manipulators in inadequate environments that do not meet the above conditions, please consult your distributor.

Be sure to transport and store the robot system in environments that meet the following conditions:

Item	Conditions
Ambient temperature	0 deg.C to 45 deg.C
Ambient relative humidity	20% to 80%

3.2 Unpacking, Transportation, and Relocation

Using a cart or similar equipment, transport the Manipulator in the same conditions as it was delivered. Observe the following when unpacking the Manipulator.

THE INSTALLATION SHALL BE MADE BY QUALIFIED INSTALLATION PERSONNEL AND SHOULD CONFORM TO ALL NATIONAL AND LOCAL CODES.

WARNING	■ Only authorized personnel should perform sling work and operate a crane or forklift. When these operations are performed by unauthorized personnel, it is extremely hazardous and may result in serious bodily injury and/or severe equipment damage to the robot system. ■ Stabilize the Manipulator with your hands when hoisting it. Unstable hoisting is extremely hazardous and may results in serious bodily injury and/or severe equipment damage to the robot system as the fall of the Manipulator.

CAUTION	■ When removing the anchor bolts, support the Manipulator to prevent falling. Removing the anchor bolts without supporting the Manipulator may get hands, fingers, or feet caught as the Manipulator will fall. ■ Do not remove the wire tie securing the arm until you finish the installation. You may get your hands caught in the Manipulator when the wire tie is removed before completing the installation. ■ To carry the Manipulator, have at least 3 people to work on it and secure the Manipulator to the delivery equipment or hold it by hand. Do not hold the bottom of the base (the screened parts in the figure). Holding these parts by hand is extremely hazardous and may cause your hands and fingers to be caught. 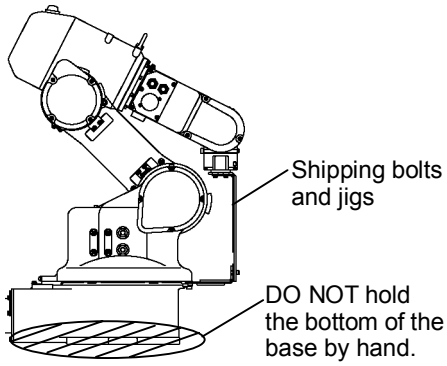 Approx. 47 kg (Manipulator weight: 45 kg (100 lb.)) ■ Avoid excessive vibration or shock during Manipulator transporting. Excessive vibration or shock may cause equipment damage to and/or malfunction of the Manipulator.

Use a crane for transporting the Manipulator during unpacking and relocation.
When using a lifting device other than a crane or forklift for transportation, avoid applying external force to the arms and motors of the Manipulator.

Check that the eyebolts are securely fastened.

The weight of the Manipulator is approximately 47 kg including the shipping bolts and jigs (the Manipulator weight: 45 kg (100 lb.)). Use a cable strong enough to withstand the weight.

The attached eyebolts are designed to support the Manipulator weight. Do not use them for anything other than transporting the Manipulator.

Mount the shipping bolts and jigs for transporting the Manipulator.

After transporting the Manipulator, remove the eyebolts and keep them for future use.

When transporting the Manipulator for a long distance, secure it to the delivery equipment so that the Manipulator cannot fall. If necessary, pack the Manipulator in the same way as it was delivered.

When condensation occurs on the Manipulator during transport or storage, turn ON the power only after the condensation dries.

When using the Manipulator for the robot system again after long-term storage, perform a test run to verify that the Manipulator works properly. Then, operate the Manipulator thoroughly.

Grease nipples are packed with the Manipulator as accessories.

3.2.1 Using a Crane

To hoist the Manipulator with a crane, secure the Manipulator with shipping bolts and jigs and posture the Manipulator as shown in the figures below (the same posture as shipping). Using a cable threaded through the eyebolts attached to the Manipulator as shown.

Transporting Posture

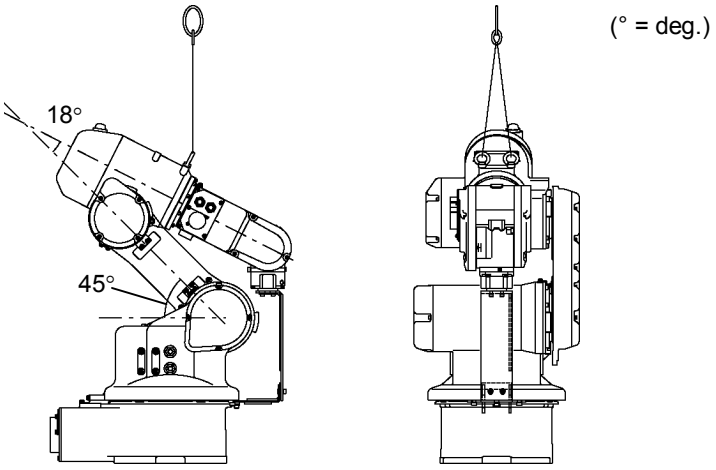

3.2.2 Using a Forklift

Position the Manipulator as shown in the figures below (the same posture as shipping) and secure it onto a pallet with shipping bolts and jigs. Insert the forklift claws under the pallet and transport the Manipulator together with the pallet. The pallet must have enough strength to bear the weight of the Manipulator. Transporting of the Manipulator must be performed slowly in order to avoid overturning or slippage.

Transporting Posture

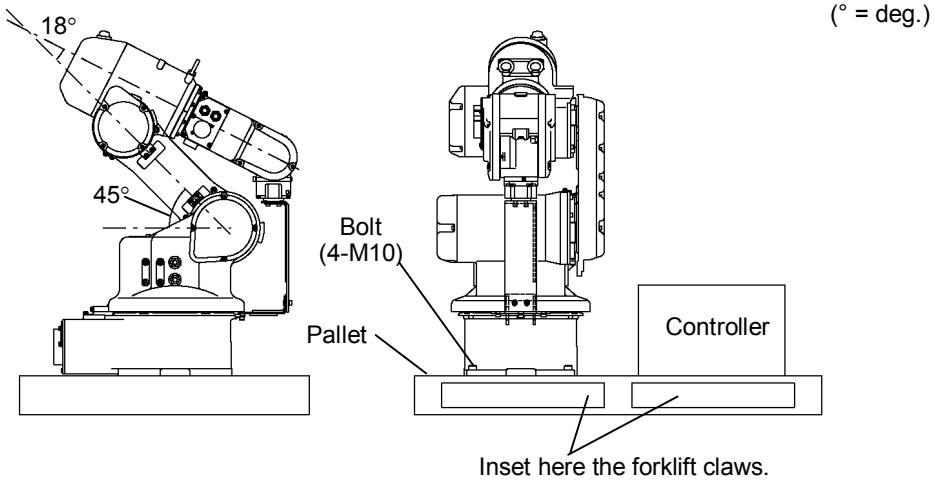

3.2.3 Removing / Attaching the Shipping Bolts and Jigs

The shipping bolts and jigs are attached to the Manipulator as shown the figure below (points A, B, and C) for protecting the Manipulator from various external forces during transportation. The jigs are painted yellow.

Point A : 4-M5×12 hexagon socket head cap bolts with plain washers and disc spring washers
Point B : 2-M5×12 hexagon socket head cap bolts with plain washers and disc spring washers
Point C : 2-M6×15 hexagon socket head cap bolts with disc spring washers

(° = deg.)

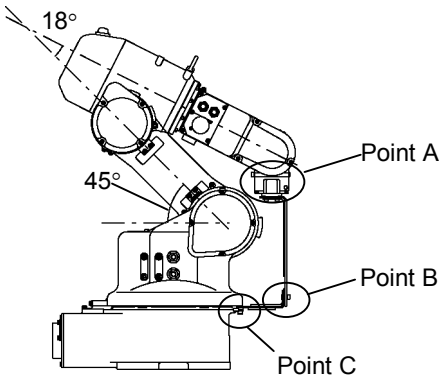

Removal

(1) Remove the bolts combining the shipping jigs at the point B.
2-M5×12 hexagon socket head cap bolts with plain washers and disc spring washers

(2) Remove the bolts securing the shipping jigs at the point A. Then, remove the upper part of the shipping jigs.
4-M5×12 hexagon socket head cap bolts with plain washers and disc spring washers

(3) Remove the bolts securing the shipping jig at the point C. Then, remove the lower part of the shipping jigs.
2-M6×15 hexagon socket head cap bolts with disc spring washers

NOTE ☞ Before turning on the power, be sure that the shipping bolts and jigs have been removed. The shipping bolts and jigs must then be stored for future use, in the event that the Manipulator must be moved again.

Installation

(1) Position the Manipulator as show in the figure above.

(2) Attach the lower part of the shipping jigs to the Manipulator at the point C. Secure it with the bolts.
2-M6×15 hexagon socket head cap bolts with disc spring washers

(3) Attach the upper part of the shipping jigs to the Manipulator at the point A. Secure it with the bolts.

4-M5×12 hexagon socket head cap bolts with plain washers and disc spring washers

(4) Secure the shipping jigs at the point B with the bolts.

2-M5×12 hexagon socket head cap bolts with plain washers and disc spring washers

3.2.4 Relocating

Follow the procedures described below when relocating the Manipulator.

(1) Turn OFF the power for all devices and unplug the cables.

NOTE

Remove the mechanical stops if using them to limit the motion range.
For details on the motion range, refer to the *Setup & Operation 5.2 Motion Range Setting of Arm #J1 by Mechanical Stops*.

(2) Unscrew the anchor bolts.
Then, remove the Manipulator from the base table.

(3) Position the Manipulator as shown in the figure. Then, secure the Manipulator to the delivery equipment or have three or more people to carry the Manipulator.
Do not hold the bottom of the base (the screened parts in the figure). Holding these parts by hand is extremely hazardous and may cause your hands and fingers to be caught.

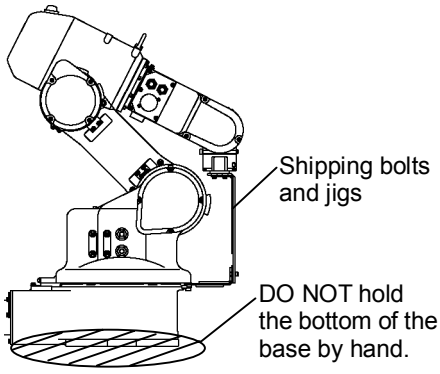

Approx. 47 kg
(Manipulator weight: 45 kg (100 lb.))

3.3 Mounting Dimensions

Mounting Area

Be sure to have the following space available in addition to the space for mounting the Manipulator, Controller, and peripheral equipment.

Space for teaching points
Space for maintenance and inspections
Space for cables

NOTE

The minimum bend radius of the power cable is 150 mm. When installing the cable, be sure to maintain sufficient distance from obstacles. In addition, leave enough space for other cables so that they are not bent forcibly.

Mounting Dimensions [Unit: mm]

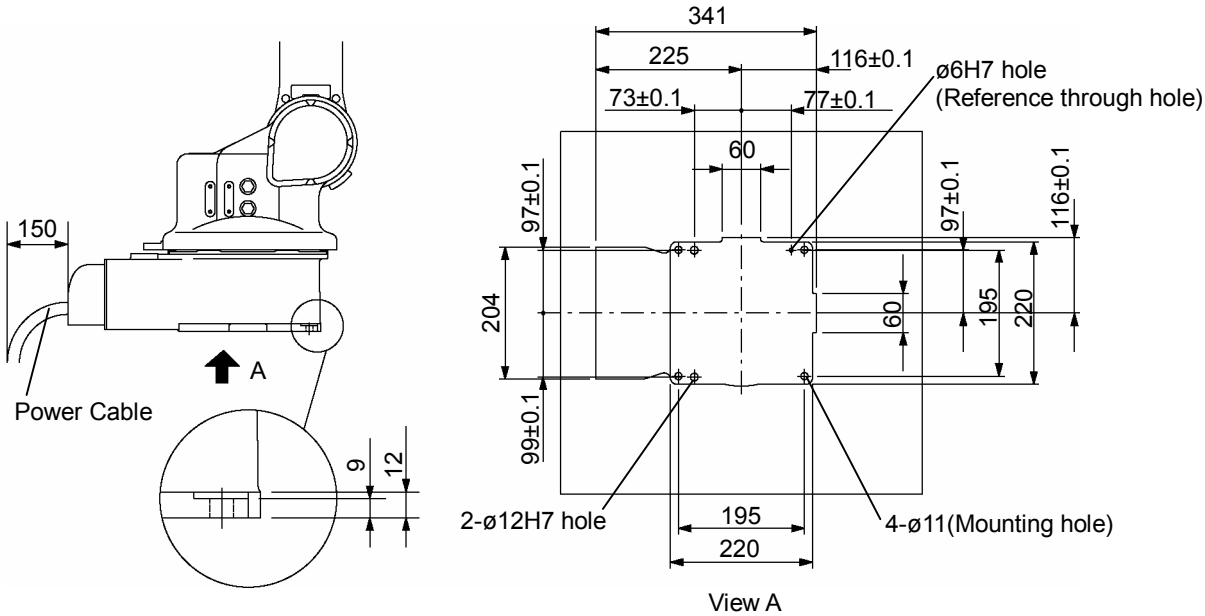

3.4 Installation

THE INSTALLATION SHALL BE MADE BY QUALIFIED INSTALLATION PERSONNEL AND SHOULD CONFORM TO ALL NATIONAL AND LOCAL CODES.

WARNING	■ To ensure safety, a safeguard must be installed for the robot system. For details on the safeguard, refer to the *Installation and Design Precautions* in the *Safety* chapter of the EPSON RC+ User's Guide or the *Safety 1.3 Design Precautions* in the SPEL CT User's Guide. ■ Install the Manipulator at a location with sufficient space so that a tool or a work piece on the end effector does not reach a wall or a safeguard when the Manipulator extends its arm fully while holding a work piece. Installing the Manipulator at a location with insufficient space is extremely hazardous and may result in serious bodily injury and/or severe equipment damage to the robot system as a tool or a work piece may collide with a wall and a safeguard. ■ Anchor the Manipulator before turning ON the power to or operating the Manipulator. Turning ON the power to or operating the Manipulator that is not anchored is extremely hazardous and may result in serious bodily injury and/or severe equipment damage to the robot system as the Manipulator may fall down. ■ Before installing and operating the Manipulator, make sure that all parts of the Manipulator are in place and have no external defects. Missing or defective parts may cause improper operation of the Manipulator. Improper operation of the Manipulator is extremely hazardous and may result in serious bodily injury and/or severe equipment damage to the robot system.

CAUTION	■ Before first turning ON the power, be sure to remove the shipping bolts and jigs from the Manipulator. Turning ON the power while the shipping bolts and jigs are attached may result in equipment damage to the Manipulator. ■ Do not remove the wire tie securing the arm until you finish the installation. You may get your hands caught in the Manipulator when the wire tie is removed before completing the installation.

3.4.1 Base Table Mounting

A base table for anchoring the Manipulator is not supplied. Please make or obtain the base table for your Manipulator. The shape and size of the base table will differ depending on the use of the robot system. For your reference, we list some basic Manipulator table requirements here.

The base table must not only be able to bear the weight of the Manipulator but also be able to withstand the dynamic movement of the Manipulator when it operates at maximum acceleration. Ensure that there is enough strength on the base table by attaching reinforcing materials such as crossbeams.

The torque and reaction force produced by the movement of the Manipulator are as follows:

Max. Horizontal rotating torque	: 300 N·m
Max. Horizontal reaction force	: 500 N
Max. Vertical rotating torque	: 460 N·m
Max. Vertical reaction force	: 1100 N

There are 4 threaded holes for the Manipulator base. Use M10 mounting bolts conforming to the strength, ISO898-1 property class: 12.9. For the dimensions, refer to the *Setup & Operation 3.3 Mounting Dimensions*.

The plate for the Manipulator mounting face should be 30 mm thick or more and made of steel to reduce vibration. The surface roughness of the steel plate should be 25 μm or less.

The base table must be secured on the floor to prevent it from moving.

The Manipulator must be installed horizontally.

When using a leveler to adjust the height of the base table, use a screw with M16 diameter or more.

If you are making holes for the cables and passing the cables through the holes on the base table, see photos below.

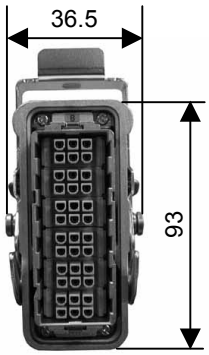

Power Cable Connector

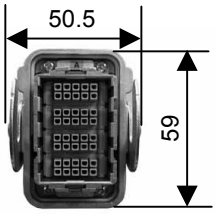

Signal Cable Connector [Unit: mm]

NOTE

For environmental conditions regarding space when placing the Controller on the base table, refer to the Controller manual.

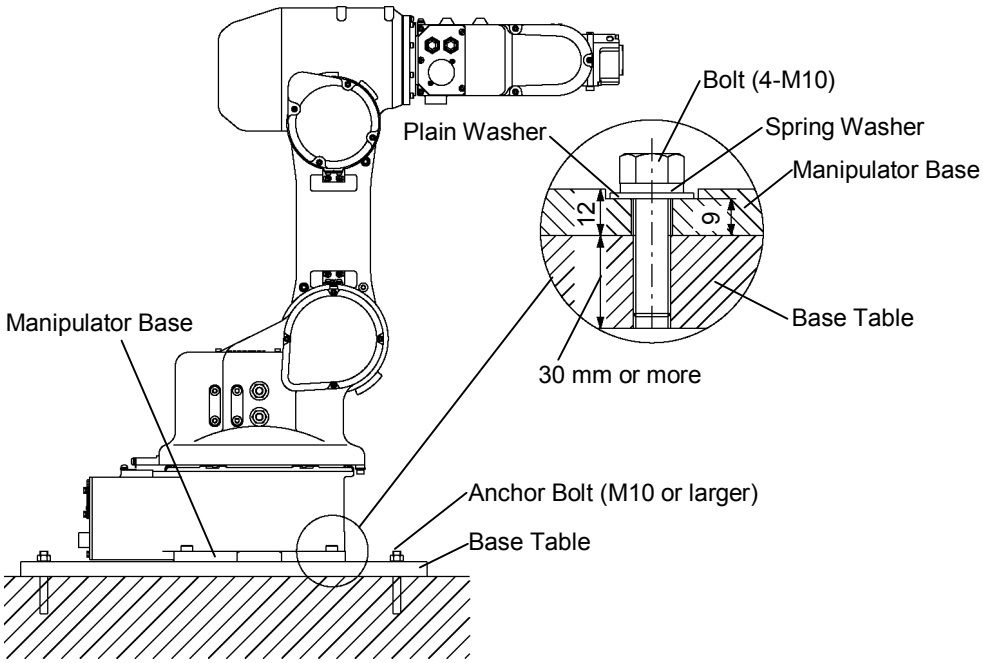
Bolt (4-M10)
Plain Washer
Spring Washer
Manipulator Base
12
9
Base Table
Manipulator Base
30 mm or more
Anchor Bolt (M10 or larger)
Base Table

3.4.2 Floor Mounting

The floor should have enough strength to bear the weight of the Manipulator. Construct a solid foundation with the appropriate thickness to withstand maximum torque and reaction force of the Manipulator (refer to the table in *Setup & Operation 3.4.1 Base Table Mounting*). As a rough standard, when there is a concrete floor with thickness of 150 mm or more, the base of the Manipulator can be secured directly to the floor with M10 anchor bolts. However, before mounting the Manipulator, check that the floor is level and that all cracks, etc. are repaired. Any thickness less than 150 mm is insufficient for mounting, even if the floor is concrete.

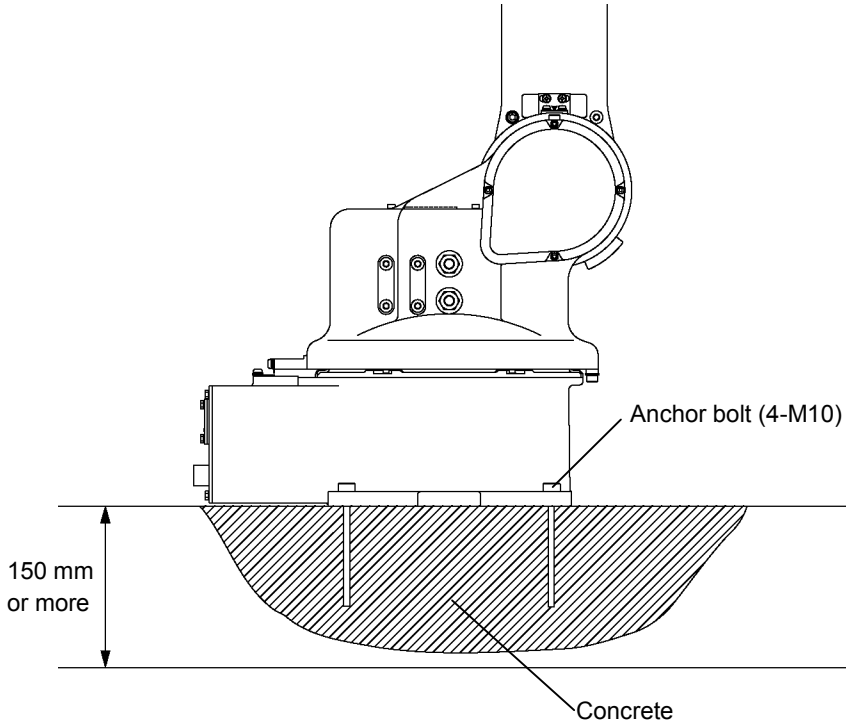

3.5 Connecting the Cables

WARNING	■ Before performing any replacement procedure, turn OFF the Controller and related equipment, and then pull out the power plug from the power source. Performing any replacement procedure with the power ON is extremely hazardous and may result in electric shock and/or malfunction of the robot system. ■ Be sure to connect the AC power cable to a power receptacle. DO NOT connect it directly to a factory power source. To shut off power to the robot system, pull out the power plug from the power source. Performing any work while connecting the AC power cable to a factory power source is extremely hazardous and may result in electric shock and/or malfunction of the robot system. ■ Be sure to connect the cables properly. Do not allow unnecessary strain on the cables. (Do not put heavy objects on the cables. Do not bend or pull the cables forcibly.) The unnecessary strain on the cables may result in damage to the cables, disconnection, and/or contact failure. Damaged cables, disconnection, or contact failure is extremely hazardous and may result in electric shock and/or improper function of the robot system. ■ Before wiring, turn OFF the Controller and related equipment, and then pull up a warning sign (e.g. DO NOT TURN ON THE POWER.). Wiring with the power ON is extremely hazardous and may result in electric shock and/or malfunction of the robot system.

CAUTION	■ When connecting the Manipulator and the Controller, make sure that the serial numbers on each equipment match. Improper connection between the Manipulator and Controller may not only cause improper function of the robot system but also safety problems. The connection method varies with the Controller used. For details on the connection, refer to the Controller manual. ■ Only authorized or certified personnel should be allowed to perform wiring. Wiring by unauthorized or uncertified personnel may result in bodily injury and/or malfunction of the robot system.

3.5.1 Cable Connections

The connector numbers are indicated on the power cable, signal cable, and Manipulator. Verify the connector numbers and connect the power cable (2BC) to the Manipulator first. Then, connect the signal cable (1BC) to the Manipulator. After connecting the cables, push down the connector lock lever until you hear the lock click.

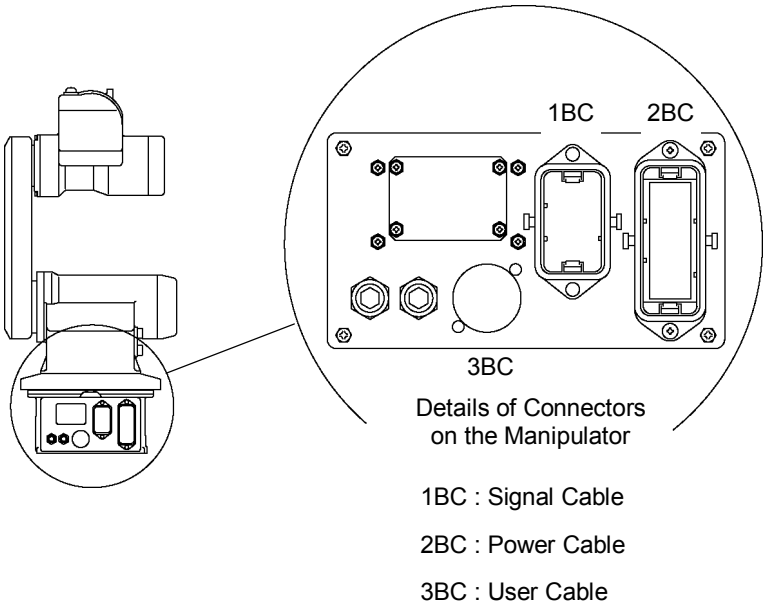

CAUTION	■ Be careful not to get hands or fingers caught while pushing down the connector lock lever because you should apply strong force to it.

For details on the Controller connectors, refer to the robot controller manual.

3.5.2 Grounding

WARNING	■ Ground resistance must be 100 Ω or less. Improper ground resistance may result in fire and/or electric shock. ■ Do not use the ground line for the Manipulator in common with other ground lines or grounding electrodes for other electric power, motor power, welding devices, etc. Using the ground line for the Manipulator in common with other ground lines or grounding electrodes may result in electric shock and/or malfunction of the robot system. ■ When using metal ducts, metallic conduits, or distributing racks for cable, ground in accordance with national and local electric equipment technical standards. Grounding that dose not meet the standards may result in electric shock and/or malfunction of the robot system.

Follow local regulations for grounding. It is recommended that the core size of the grounding wire be 5.5 mm^2 or more.
Directly connect the ground line to the Manipulator as shown in the figure below.

Grounding Method

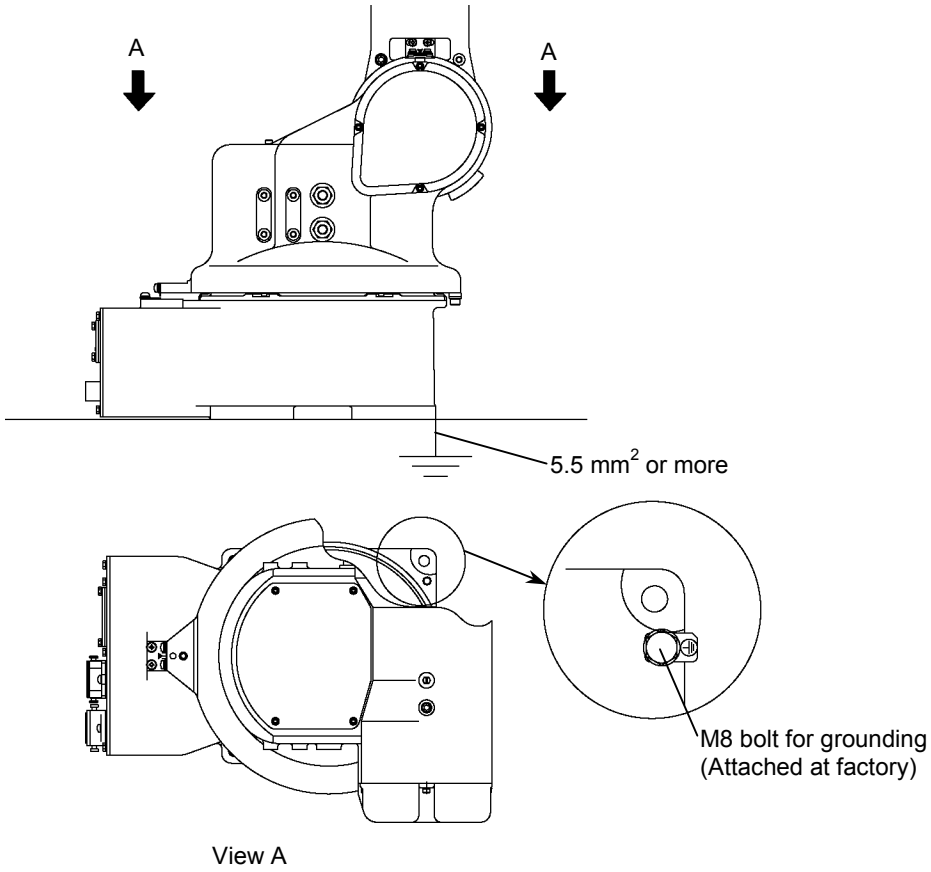

3.6 Setting the Basic Pose for Calibration

After certain parts have been replaced (motors, reduction gear unit, belts, etc.), a mismatch exists between the origin stored in each motor and its corresponding origin stored in the Controller. It is necessary to match these origins after replacing the parts. The process of aligning the two origins is called "Calibration".
Before performing the calibration, a specific point must be set as "reference point", and also the pose data (point data) on the reference point (hereinafter referred to as the "basic pose") must be recorded. This must be carried out as soon as the robot system is installed. Follow the procedure below to record pulses of the basic pose.

For SPEL CT, a coordinate point including the arm pose is defined as "pose". The data is called "pose data". For EPSON RC+, a coordinate point including the arm pose is defined as "point". The data is called "point data".

How to set the reference points for calibration

(1) Decide the reference points.
The reference points should be two or more around the points (poses) where your Manipulator moves frequently. Also, arms #J2, #J3, and #J5 should not form a straight line at these reference points (the Manipulator should not stretch completely). Be sure that the Manipulator moves to the reference points without problems.

(2) Attach the calibration jigs to the reference points.
Attach your end effector or the calibration jigs described in the section *Maintenance 13.2 Calibration Jig* to the Manipulator.

(3) Move the Manipulator to the reference points and set the basic pose as the pose data (point data).
Refer to the following manual for how to move the Manipulator.

SPEL CT	: *Introduction 6. Teaching* in the SPEL CT User's Guide
EPSON RC+ 4.*	: *Jog & Teach Command (Tools Menu)* in the chapter *The EPSON RC+ GUI* in the *EPSON RC+ User's Guide*
EPSON RC+ 5.*	: *5.11.1 Robot Manager Command Tools: Robot Manager: Jog and Teach Page* in the *EPSON RC+ 5.0 User's Guide*

(4) Place tram marks on the Manipulator so that you can reproduce each joint position to create the set basic pose.
You should place tram marks on the Manipulator if the Manipulator cannot move to the 0 pulse positions.

(5) Display the origin data that are currently stored in the Controller and record them.
(The origin data are not used in this calibration procedure. However, record the origin data in case of calibration failure.)

SPEL CT

<Debug Pane> button - [Command Execution] window

```
HOFS
```

[Joint #J1 Pulse value] [Joint #J2 Pulse value]
[Joint #J3 Pulse value] [Joint #J4 Pulse value]
[Joint #J5 Pulse value] [Joint #J6 Pulse value]

EPSON RC+

EPSON RC+ 4.* or before (RC520)

[Monitor Window]

```
>Hofs
```

[Joint #J1 Pulse value], [Joint #J2 Pulse value], [Joint #J3 Pulse value], [Joint #J4 Pulse value], [Joint #J5 Pulse value], [Joint #J6 Pulse value]

EPSON RC+ 5.0 or later (RC170)

Select menu-[Setup]-[Controller] to display the [Setup Controller] dialog.

Select [Robot]-[Calibration] and "Hofs" values are indicated.

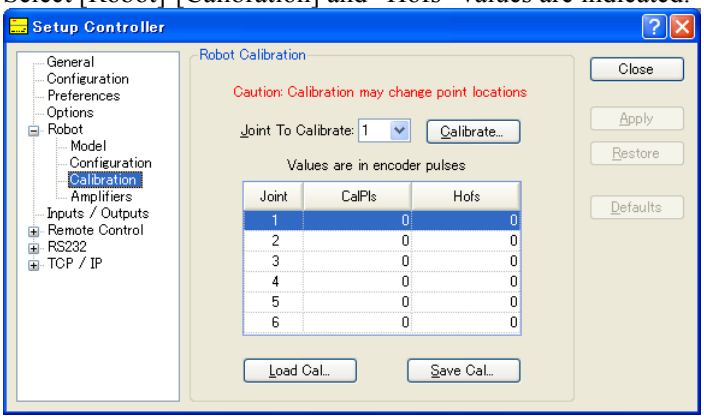

NOTE

Click the <Save> button to save the "Hofs" value to a file.

(6) Remove the calibration jigs.

When using the jigs explained in the *Maintenance 13.2 Calibration Jig*, remove the jig attached to the end effector after setting the reference points and basic pose. You can leave the other jigs attached. If you remove the jigs, attach them to the same positions for next calibration.

3.7 User Wires and Pneumatic Tubes

CAUTION	■ Only authorized or certified personnel should be allowed to perform wiring. Wiring by unauthorized or uncertified personnel may result in bodily injury and/or malfunction of the robot system.

User electrical wires and pneumatic tubes are contained in the cable unit.

Electrical Wires

Rated Voltage	Allowable Current	Wires	Nominal Sectional Area	Note
AC/DC30 V	Single wire : 2.5 A All wires : 40 A	16	0.2 mm^2	Shielded

Total currents of pins #1 to #16 must be 40A or below.

	Maker	Standard	
Suitable Connector	JAE	Wrist JL05-2A20-29SC JL05-6A20-29P-(A72)	 (On the Manipulator side) (On the other side)
		Base JL05-2A20-29PC JL05-6A20-29S-(A72)	 (On the Manipulator side) (On the other side)

Pins with the same number, indicated on the connectors on both ends of the cables, are connected.

Pneumatic Tubes

Max. Usable Pneumatic Pressure	Pneumatic Tubes	Outer Diameter × Inner Diameter
0.49 MPa (5 kgf/cm^2) (71 psi)	2	ø 6 mm × ø 4 mm

Fittings for ø 6 mm (outer diameter) pneumatic tubes are supplied on the both ends of the pneumatic tubes.

User Wires and Pneumatic Tubes

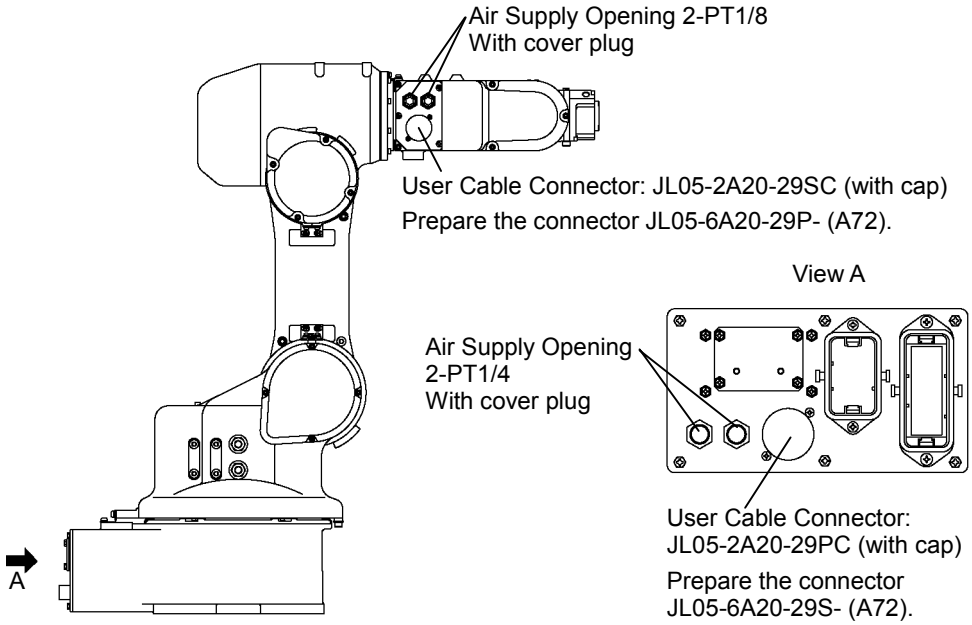

Numbers of Pins in Use

User Cable: 0.2 mm^2, 16 cables

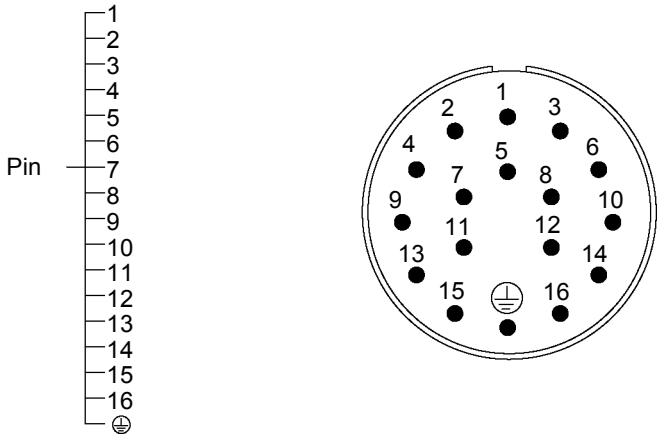

The same pin number (1-16) of two connectors is connected in the lead line of single 0.2 mm^2.

3.8 Camera Mounting

Arm #J5 end part

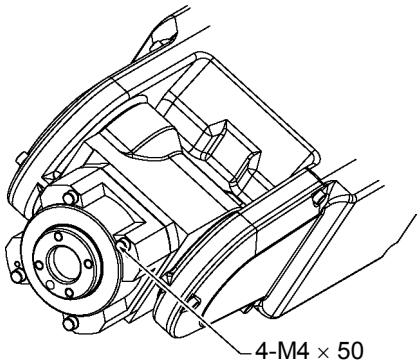

A camera mounting plate is necessary for camera mounting. Create a camera mounting plate for your Manipulator and attach it to Arm #J5 following the procedure and figures in this section.

NOTE

Prepare the following items for camera mounting:

Camera mounting plate

Screws that have at least 8 mm depth of engagement in the Arm #J5 end part

These items are included in the optional camera bracket.

CAUTION	■ When securing the Arm #J5 end part and the camera mounting plate to the Manipulator, use the screws that have at lease 8 mm depth of engagement in the Arm #J5 end part. If you use screws with insufficient depth of engagement, the Arm #J5 end part and/or camera falling due to insufficient strength of tap may cause damage to the Manipulator.

The Arm #J5 end part is secured with four screws. Remove two out of them and attach the camera mounting plate. (You can use up to two screws for camera mounting.)

How to attach the camera mounting plate

(1) Remove two screws out of four screws on the Arm #J5 end part.

4-M4×50 hexagon socket head cap bolts with disc spring washers

(2) Attach the camera mounting plate to the Arm #J5 end part and secure it with the screws that have at least 8 mm depth of engagement in the Arm #J5 end part.

Tightening torque 280 N·cm (29kgf·cm)

Camera Mounting Dimensions

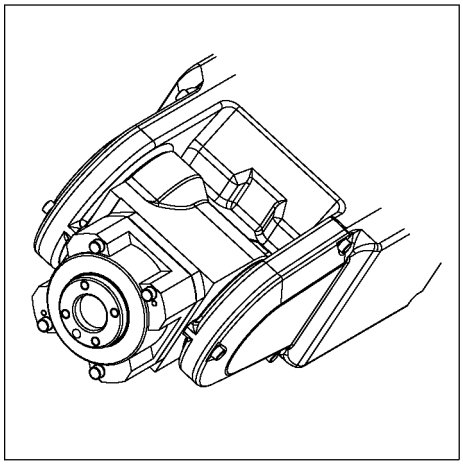

[Unit: mm]

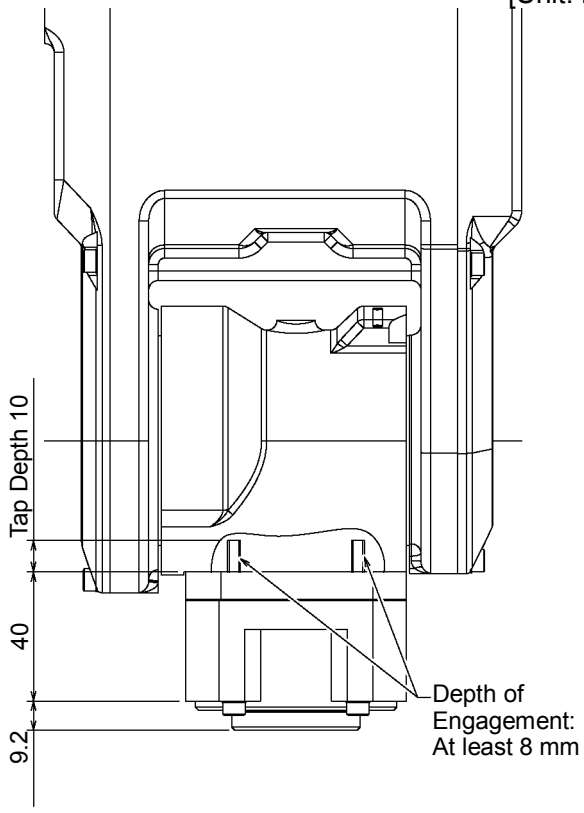

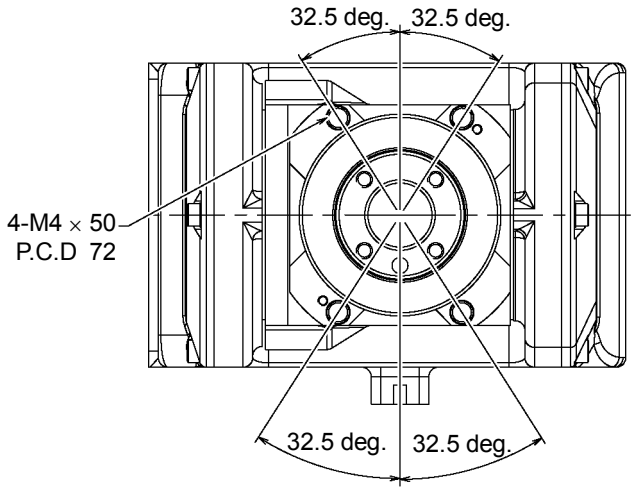

Use up to two screws for camera mounting.

For your reference, mounting examples of the optional camera bracket (Code: R12B031904) are described below. (No camera is included in the optional camera bracket.)

For details of how to mount the camera bracket, refer to the manual coming with the camera bracket.

Mounting Example 1

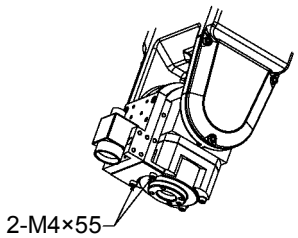

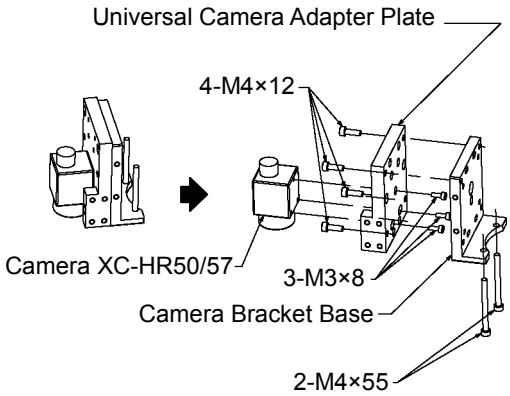

Mounting Example 2

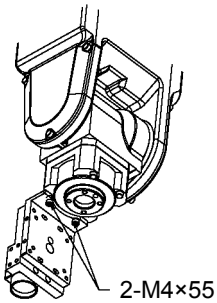

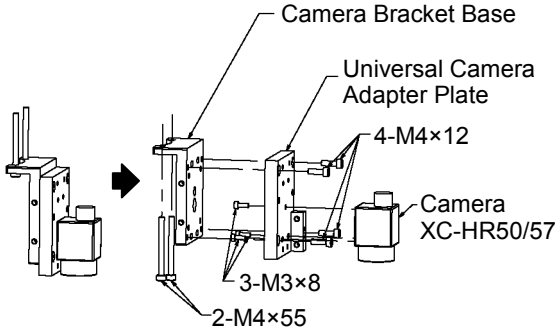

Mounting Example 3

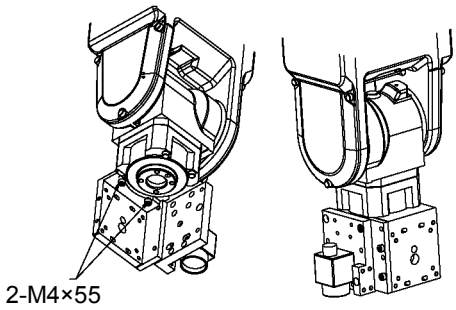

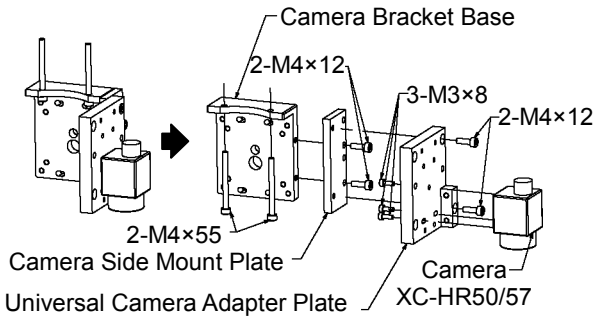

4. End Effectors

4.1 Attaching an End Effector

Create an end effector for your Manipulator that will attach to Arm #J6. Before attaching the end effector to the end of Arm #J6, observe these guidelines.
The wrist flange dimensions are shown in the following figure. In order to see the tram marks, it is recommended that the attachment be mounted inside the fitting. Fitting depth of inside and outside fittings must be 6 mm or less.

CAUTION	■ If you use an end effector equipped with a gripper or chuck, connect wires and/or pneumatic tubes properly so that the gripper does not release the work piece when the power to the robot system is turned OFF. Improper connection of the wires and/or pneumatic tubes may damage the robot system and/or work piece as the work piece is released when the Emergency Stop switch is pressed. I/O outputs are configured at the factory so that they are automatically shut off (0) by power disconnection, the Emergency Stop switch, or the safety features of the robot system.

Wrist Flange

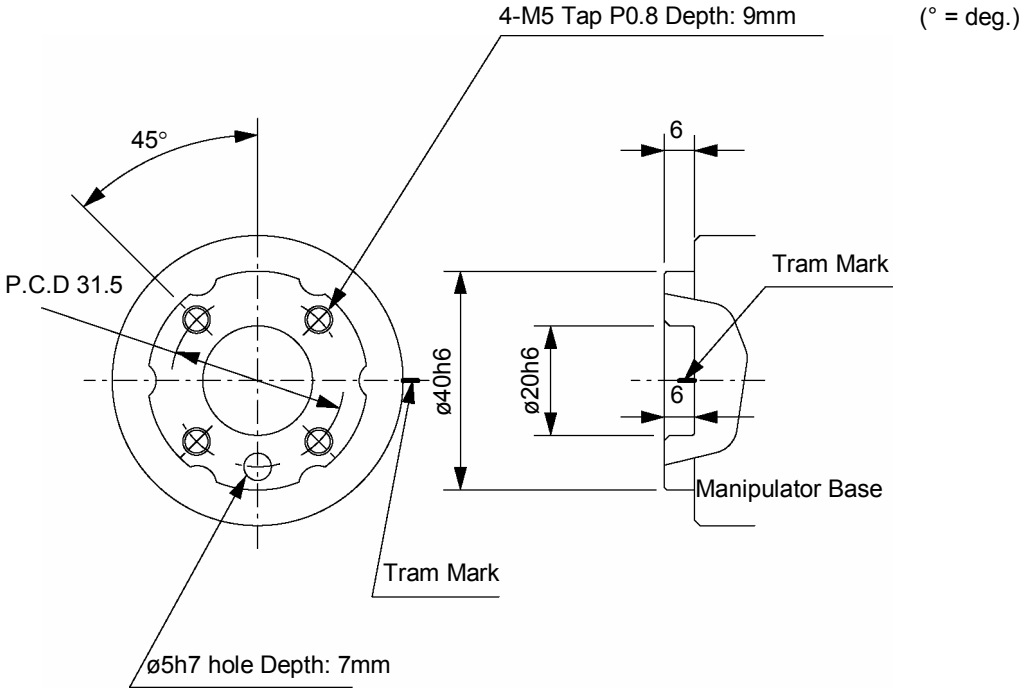

NOTE ☞ Wash off anti-corrosive paint (solid yellow paint) on the wrist flange surface with thinner or light oil before mounting the end effector.

Arm #J6

Attach an end effector to the end of the Arm #J6 using an M5 bolt.

Layouts

When you operate the Manipulator with an end effector, the end effector may interfere with the Manipulator because of the outer diameter of the end effector, the size of the work piece, or the position of the arms. When designing your system layout, pay close attention to the interference area of the end effector.

4.2 Attaching Valves

There are two decks on the upper arm called “upper arm rear deck” and “upper arm center deck” as shown in the figures below to mount peripheral equipment such as valves.

When the weight on the fore-end of Arm #J6 is 3 kg or less, the available weight on the deck is 4 kg or less including the weight on Arm #J6. For example, when the weight on Arm #J6 is 3kg, the remaining 1kg is available weight on the deck.

For details of the payload exceeding 3 kg, refer to the section “*Restriction on payload exceeding 3 kg (more than 3 kg and less than or equal to 5 kg)*” in the *Setup & Operation 4.3.1 WEIGHT Setting*.

Deck on the Upper Arm [Unit: mm]

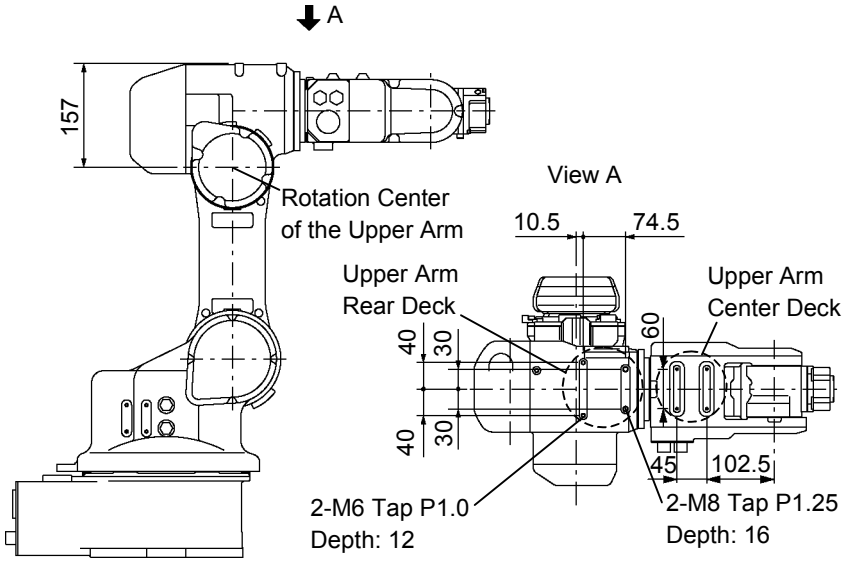

4.3 WEIGHT and INERTIA Settings

The WEIGHT and INERTIA commands are for setting the load parameters of the Manipulator. These settings optimize the Manipulator motion.

WEIGHT Setting

The WEIGHT command is for setting the load weight. The more the load weight increases, the more the speed and acceleration/deceleration for the Manipulator movement are reduced.

INERTIA Setting

The INERTIA command is for setting the moment of inertia and the eccentricity of the load. The more the moment of inertia increases, the more the acceleration and deceleration of the Arm #J6 are reduced. The more the eccentricity increases, the more the acceleration and deceleration for the Manipulator movement are reduced.

To ensure optimum Manipulator performance, it is important to make sure that the load (weight of the end effector and work piece) and moment of inertia of the load are within the maximum rating for the Manipulator, and that Arm #J6 does not become eccentric.
If the load or moment of inertia exceed the ratings or if the load becomes eccentric, follow the steps in the *Setup & Operation 4.3.1 WEIGHT Setting* and *4.3.2 INERTIA Setting*, to set parameters.
Setting parameters makes the operation of the Manipulator optimal, reduces vibration to shorten the operating time, and improves the capacity for larger loads. In addition, it reduces persistent vibration produced when the moment of inertia of the end effector and work piece is bigger.

The allowable weight for PS3 Manipulators is up to 3 kg (5 kg*). However, the moment and the moment of inertia should also be considered due to limitations for these factors.
If force is applied to the Manipulator instead of the weight, force on the Arms #J4, #J5, and #J6 should be within the values shown in the table "Allowable Moment and Moment of Inertia for PS3 Manipulators".

* When the load of the Manipulator is more than 3 kg and less than or equal to 5 kg, refer to the section "*Restriction on payload exceeding 3 kg (more than 3 kg and less than or equal to 5 kg)*" in the *Setup & Operation 4.3.1 WEIGHT Setting*.

Allowable Moment and Moment of Inertia for PS3 Manipulators

Arm	Allowable Moment N·m (kgf·m)*1	$GD^2/4$ Allowable Moment of Inertia ($kg \cdot m^2$)
#J4	7.25 (0.74)	0.3
#J5	7.25 (0.74) *2	0.3 *2
#J6	5.21 (0.53)	0.1

*1 Gravitational unit
*2 The allowable moment and allowable moment of inertia of Arm #J5 are calculated by the distance from the Arm #J5 rotation center (a + 90 mm). (Refer to the figure in the "Critical Location of the Load on PS3 Manipulators").

The following figure shows the critical location of the load on the PS3 Manipulators.

Critical Location of the Load on PS3 Manipulators

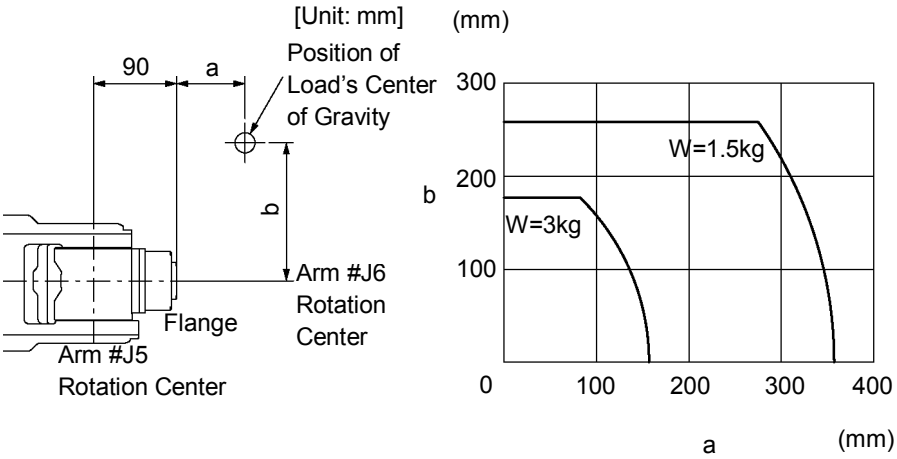

a: Distance from the Flange
b: Distance from the Arm #J6 Rotation Center

When calculating the critical location of the load on the Arm #J5 using the allowable moment and allowable moment of inertia, the calculated value represents a distance from the Arm #J5 rotation center, not the distance from the flange. Therefore, to get a value of the critical location of the load on Arm #5, subtract 90 (mm) from the calculated distance from the Arm #J5 rotation center as shown the example below.

Example: Calculate the critical location of the load on the Arm #J5 (c) when a 2.5 kg load is on the Arm #J6 rotation center line (b = 0).

Allowable Moment of the Arm #J5 (N·m) / Load (kg)
= Distance from the Arm #J5 rotation center (m)
7.25 (N·m) / 9.8 / 2.5 (kg) = 0.2959 → 0.295 (round down) (m) = 295 (mm)

c (mm) = Distance from the Arm #J5 rotation center (mm) – 90 (mm)
c = 295 (mm) – 90 (mm) = 205 (mm)

Moment

A moment is a necessary torque (holding torque) to counteract the gravity affecting the load.
Design an end effector so that the eccentric quantity at the position where the load is attached is within the allowable moment.

A maximum torque (T) is calculated by the following formula.

$T = m\ (kg) \times L\ (m) \times g\ (m/s^2)$

m: Weight of load (kg)
L: Eccentric quantity of load (m)
g: Gravitational acceleration (m/s^2)

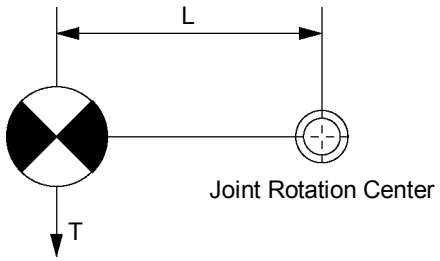

Maximum eccentric quantities of load for PS3 Manipulators are shown in the following table.

Max. Eccentric Quantity of Load for PS3 Manipulators

Axis	Max. Eccentric Quantity of Load (mm) (Distance between the joint rotation center and the load's center of gravity)				
	WEIGHT 1 kg	WEIGHT 2 kg	WEIGHT 3 kg	WEIGHT 4 kg	WEIGHT 5 kg
J4	300 mm	300 mm	247 mm	185 mm	148 mm
J5	300 mm	300 mm	247 mm	185 mm	148 mm
J6	300 mm	266 mm	178 mm	133 mm	107 mm

The maximum eccentric quantity of load is restricted to 300 mm or less.

4.3.1 WEIGHT Setting

CAUTION	■ Set the total weight of the end effector and the work piece to 3 kg or less. The PS3 Manipulators can operate without limitations on the condition that the load of the Manipulator should be 3 kg or less. When the payload of the Manipulator is more than 3 kg and less than or equal to 5 kg, refer to the section "*Restrictions on payload exceeding 3 kg (more than 3 kg and less than or equal to 5 kg)*" in the later part of this section for details. Always set the Weight parameters of the WEIGHT command according to the load. Setting a value that is smaller than the actual load may cause errors, excessive shock, insufficient function of the Manipulator, and/or shorten the life cycle of parts/mechanisms.

The acceptable weight capacity (end effector and work piece) for PS3 Manipulators is 2 kg nominal rating and 3 (5*) kg maximum. When the load (weight of the end effector and work piece) exceeds the rating, change the setting of the Weight parameter.
After the setting of the Weight parameter is changed, the maximum acceleration/deceleration and speed of the robot system corresponding to the Weight parameter is set automatically.

* When the payload of the Manipulator is more than 3 kg and less than or equal to 5 kg,

refer to the section "*Restrictions on payload exceeding 3 kg (more than 3 kg and less than or equal to 5 kg)*" in the later part of this section for details.

Setting method of Weight parameters

The method for setting Weight parameter varies with the software used.

SPEL CT

Enter the combined total weight of the end effector and work piece into the [Weight:] text box on the [WEIGHT] panel ([Setup] - [Robot Parameters]).
You may also execute the WEIGHT command from the [Command Execution] window.

EPSON RC+

EPSON RC+ 4.* or before (RC520)

Enter the combined total weight of the end effector and work piece into the [Weight:] text box on the WEIGHT panel ([Project]-[Robot Parameters]).
You may also execute the Weight command from the [EPSON RC+ Monitor Window].

EPSON RC+ 5.0 or later (RC170)

Enter into the [Weight:] text box on the [Weight] panel ([Tools]-[Robot Manager]).
You may also execute the Weight command from [Command Window].

Load on the Manipulators

The Manipulator can load valves or any other devices onto the following three points.
A point on the fore-end of the Arm #J6
Two decks, (a) rear and (b) center, on the upper arm

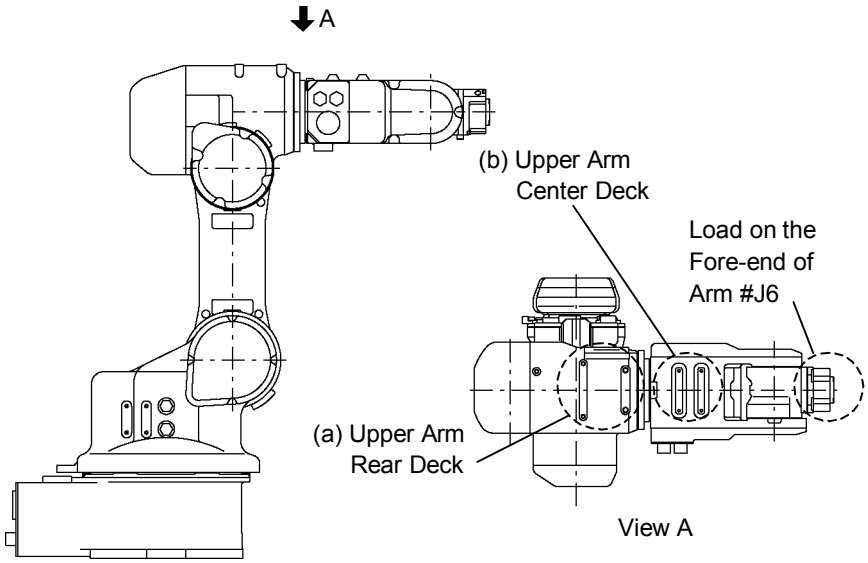

When you attach the equipment to the decks on the upper arm, convert its weight into equivalent weight assuming that the equipment is attached to the end of the Arm #J6. Then, this equivalent weight added to the load will be a Weight parameter.
Calculate the Weight parameter by following the formula below and enter the value.

Weight Parameter Formula

Weight parameter = $M_w + W_a + W_b$

M_w : Load on the fore-end of Arm #J6 (kg)
W_a : Equivalent weight of the upper arm rear deck (kg)
W_b : Equivalent weight of the upper arm center deck (kg)

$W_a = m_a (L_a)^2 / (L)^2$
$W_b = m_b (L_b)^2 / (L)^2$

m_a : Weight of the equipment on the upper arm rear deck
m_b : Weight of the equipment on the upper arm center deck
L : Length of the upper arm (390 mm)
L_a : Distance between the Joint #J3 and the center of gravity of the equipment on the upper arm rear deck (mm)
L_b : Distance between the Joint #J3 and the center of gravity of the equipment on the upper arm center deck (mm)

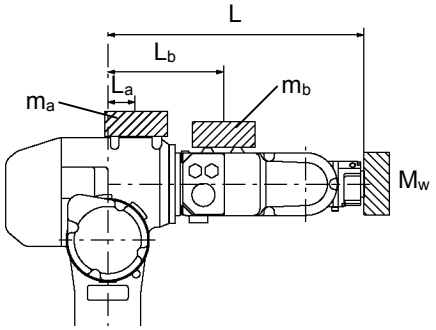

<Example> The fore-end of Arm #J6 is 390 mm (L) away from the Joint #J3.
Load on the fore-end of Arm #J6 is 1 kg (M_w).
Load on the upper arm rear deck is 1.5 kg (m_a).
The deck is 60 mm (L_a) away from Joint #J3.
Load on the upper arm center deck is 0.5 kg (m_b).
The deck is 200 mm (L_b) away from the Joint #J3.

$W_a = 1.5 \times 60^2 / 390^2 = 0.035 \rightarrow 0.04$ (round up)
$W_b = 0.5 \times 200^2 / 390^2 = 0.131 \rightarrow 0.14$ (round up)
$M_w + W_a + W_b = 1 + 0.04 + 0.14 = 1.18$

Enter “1.18” for the Weight parameter.

Depending on the load on the fore-end of Arm #J6, the payload on the upper arm rear deck and the upper arm center deck varies. See the graph below for details.

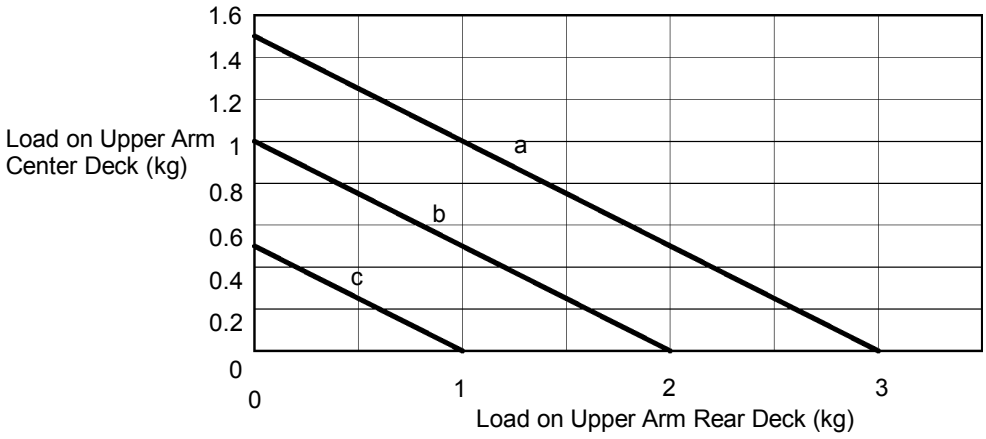

Load on the Fore-end of Arm #J6
a = 1 kg
b = 2 kg
c = 3, 4, 5 kg (Limited the wrist pose when the load is both 4 and 5 kg)

Automatic speed setting by Weight parameter

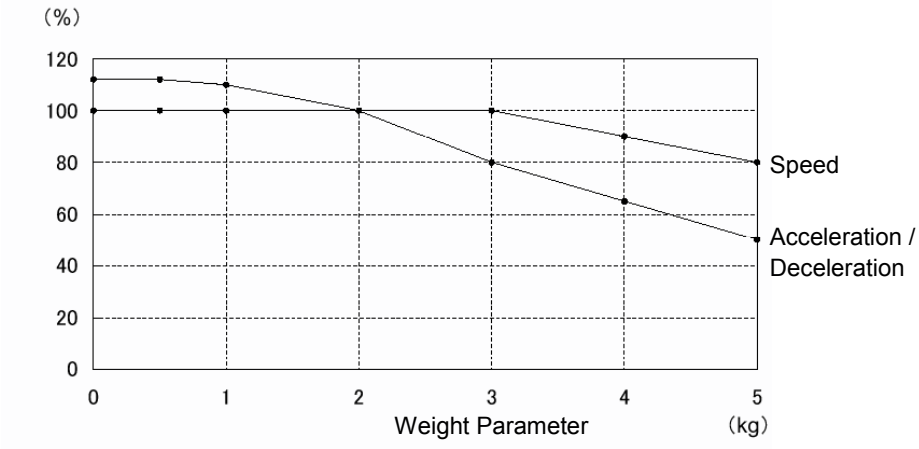

* The percentage in the graph is based on the speed at rated weight (2 kg) as 100%.
* When the payload of the Manipulator is more than 3 kg and less than or equal to 5 kg, refer to the section "*Restrictions on payload exceeding 3 kg (more than 3 kg and less than or equal to 5 kg)*" in the later part of this section for details.

Restrictions on payload exceeding 3 kg (more than 3 kg and less than or equal to 5 kg)

Although the maximum payload of the PS3 Manipulator is 3 kg, you can increase the payload up to 5 kg when you restrict the arm pose range of Arm #J5 as shown below.

When the payload exceeds 3 kg, the arm pose of Arm #J5 should be within the restricted angle range shown in the following graph.
The graph shows the relation between the load and the Arm #J5 restricted angel (A^1) measured vertically (in the direction of gravitational effect). The more the load on the fore-end of Arm #J6 increases, the more the restricted angle range narrows.

When the Manipulator operating direction is vertical to the working plane, the arm pose restriction of the Arm #J5 is equivalent to the tilt restriction of working plane (A^2).

In the case of eccentric load, the restricted angle is an angle (B) forming with a vertical line and a straight line passing through the center of gravity of load and the rotation center of Arm #J5.

The eccentric quantity of load should be within the allowable moment and the allowable moment of inertia of Arms #J4, J5, and J6.

Relation between load and Arm #J5 restricted angle

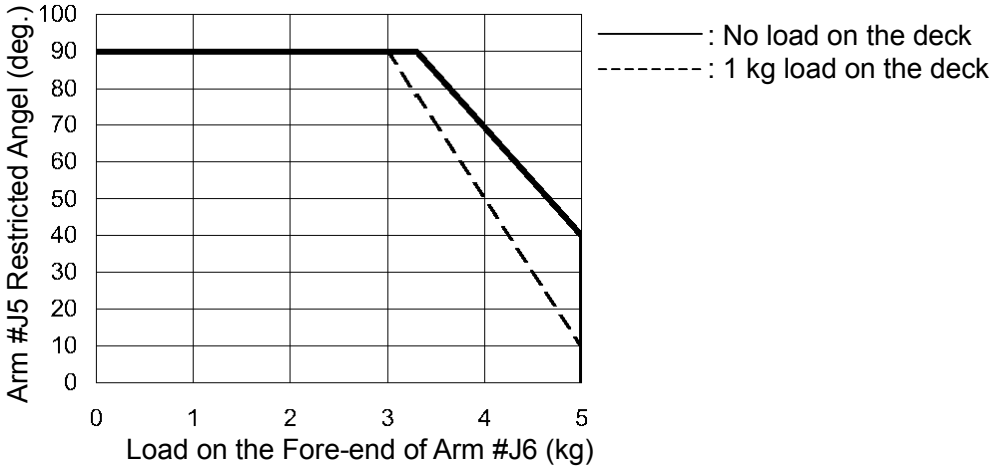

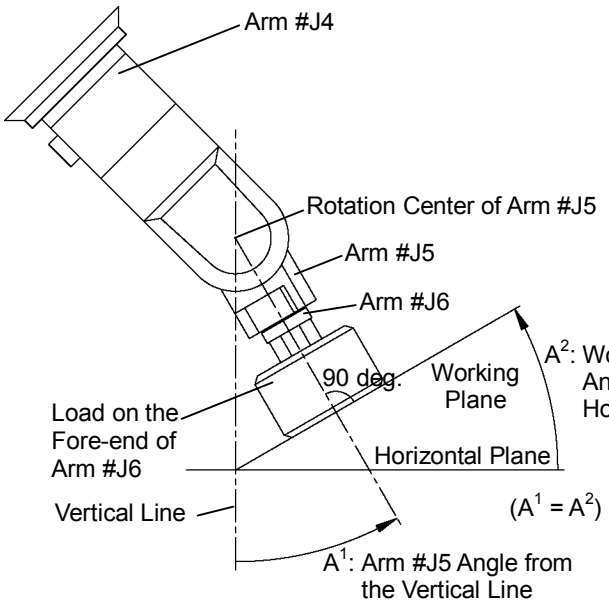

Relation between Arm #J5 Angle and Working Plane Angle

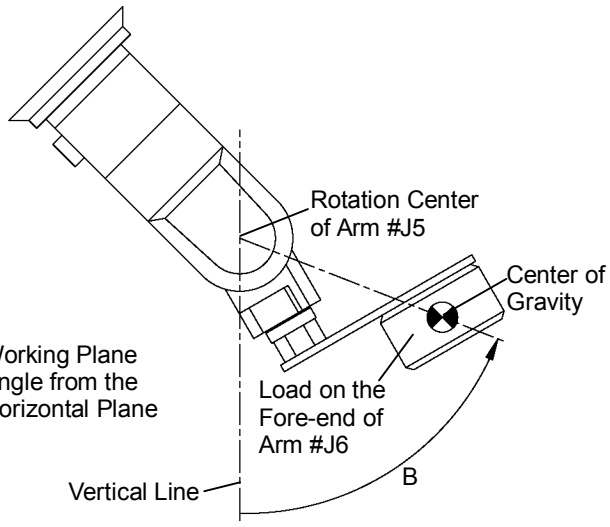

Restricted Angle for Eccentric Angle

4.3.2 INERTIA Setting

Moment of Inertia and the INERTIA Setting

The moment of inertia is defined as “the ratio of the torque applied to a rigid body and its resistance to motion”. This value is typically referred to as “the moment of inertia”, “inertia”, or “GD^2”. When the Manipulator operates with objects such as an end effector attached to the Arm #J6, the moment of inertia of load must be considered.

CAUTION	■ The moment of inertia of load (weight of the end effector and work piece) must be 0.1 kg·m^2 or less. The PS3 Manipulators are not designed to work with moment of inertia exceeding 0.1 kg·m^2. Always set the moment of inertia (INERTIA) parameter according to the moment of inertia. Setting a value that is smaller than the actual moment of inertia may cause errors, excessive shock, insufficient function of the Manipulator, and/or shorten the life cycle of parts/mechanisms.

The acceptable moment of inertia of load in PS3 Manipulator is 0.1 kg·m^2 nominal rating and 0.1 kg·m^2 maximum. When the moment of inertia of load exceeds the rating, change the setting of the moment of inertia using the INERTIA command. After the setting has been changed, the maximum acceleration/deceleration speed of Arm #J6 responding to “moment of inertia” is set automatically.

Moment of inertia of load on Arm #J6

The moment of inertia of load (weight of the end effector and work piece) on Arm #J6 can be set by the “moment of inertia (INERTIA)” parameter of the INERTIA command.
The method for setting the parameter varies with the software used.

SPEL CT

Enter the combined total moment of inertia of the end effector and work piece into the [Load inertia:] text box on the [INERTIA] panel ([Setup] - [Robot Parameters]).
You may also execute the INERTIA command from the [Command Execution] window.

EPSON RC+

EPSON RC+ 4.* or before (RC520)

Enter the combined total moment of inertia of the end effector and work piece into the [Load inertia:] text box on the [INERTIA] panel ([Project] – [Robot Parameters]).
You may also execute the INERTIA command from the [EPSON RC+ Monitor Window].

EPSON RC+ 5.0 or later (RC170)

Enter into the [Load inertia:] text box on the [Inertia] panel ([Tools]–[Robot Manager]).
You may also execute the Inertia command from [Command Window].

Eccentric Quantity and the INERTIA Setting

CAUTION	■ The eccentric quantity of load (weight of the end effector and work piece) must be 300 mm or less. The PS3 Manipulators are not designed to work with eccentric quantity exceeding 300 mm. Always set the eccentric quantity parameter according to the eccentric quantity. Setting a value that is smaller than the actual eccentric quantity may cause errors, excessive shock, insufficient function of the Manipulator, and/or shorten the life cycle of parts/mechanisms.

The acceptable eccentric quantity of load in PS3 Manipulators is 50 mm nominal rating and 300 mm maximum. When the eccentric quantity of load exceeds the rating, change the setting of eccentric quantity parameter using the INERTIA command. After the setting has been changed, the maximum acceleration/deceleration speed of Manipulator corresponding to "eccentric quantity" is set automatically.

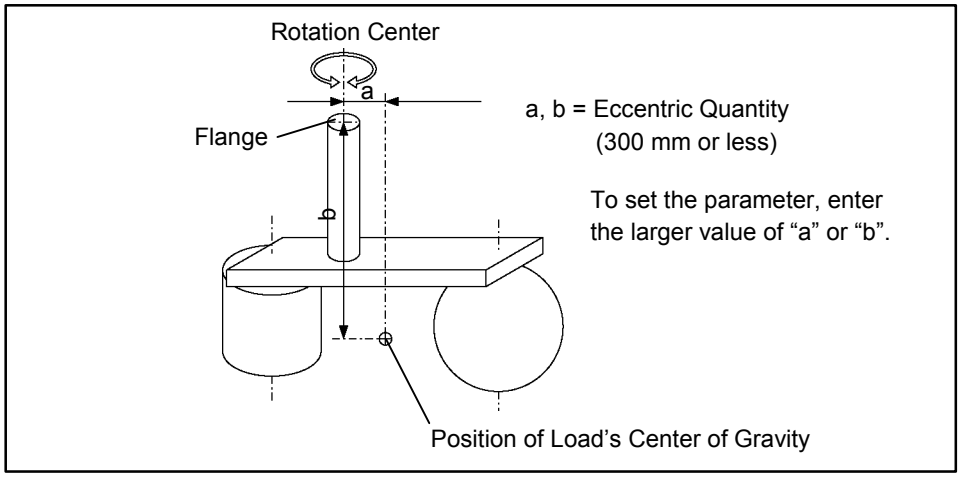

Eccentric Quantity

Eccentric quantity of load on Arm #J6

The eccentric quantity of load (weight of the end effector and work piece) on Arm #J6 can be set by the "eccentric quantity" parameter of the INERTIA command.
Enter the larger value of "a" or "b" in the figure above to the [Eccentricity] text box.
The method for setting the parameter varies with the software used.

SPEL CT

Enter the combined total eccentric quantity of the end effector and work piece into the [Eccentricity:] text box on the [INERTIA] panel ([Setup] - [Robot Parameters]).
You may also execute the INERTIA command from the [Command Execution] window.

EPSON RC+

EPSON RC+ 4.* or before (RC520)

Enter the combined total eccentric quantity of the end effector and work piece into the [Eccentricity:] text box on the [INERTIA] panel ([Project] – [Robot Parameters]).
You may also execute the INERTIA command from the [EPSON RC+ Monitor Window].

EPSON RC+ 5.0 or later (RC170)

Enter into the [Eccentricity:] text box on the [Inertia] panel ([Tools]–[Robot Manager]).
You may also execute the Inertia command from [Command Window].

Automatic acceleration/deceleration setting by INERTIA (eccentric quantity)

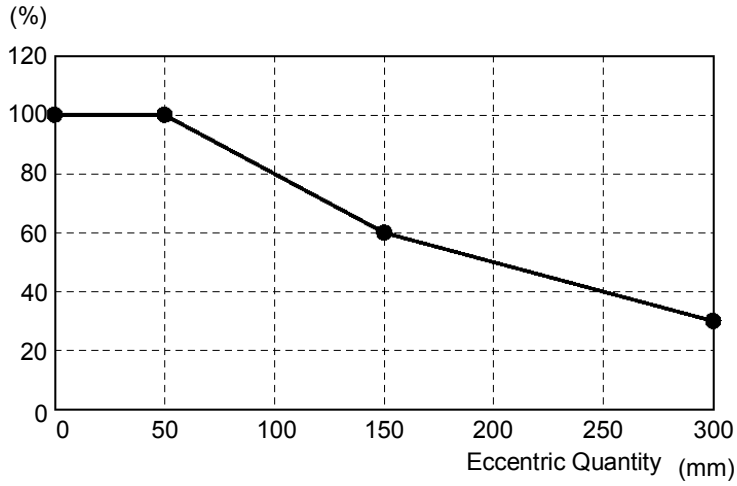

* The percentage in the graph is based on the acceleration/ deceleration at rated eccentricity (50 mm) as 100%.

Calculating the Moment of Inertia

Refer to the following examples of formulas to calculate the moment of inertia of load (end effector with work piece).

The moment of inertia of the entire load is calculated by the sum of each part (a), (b), and (c).

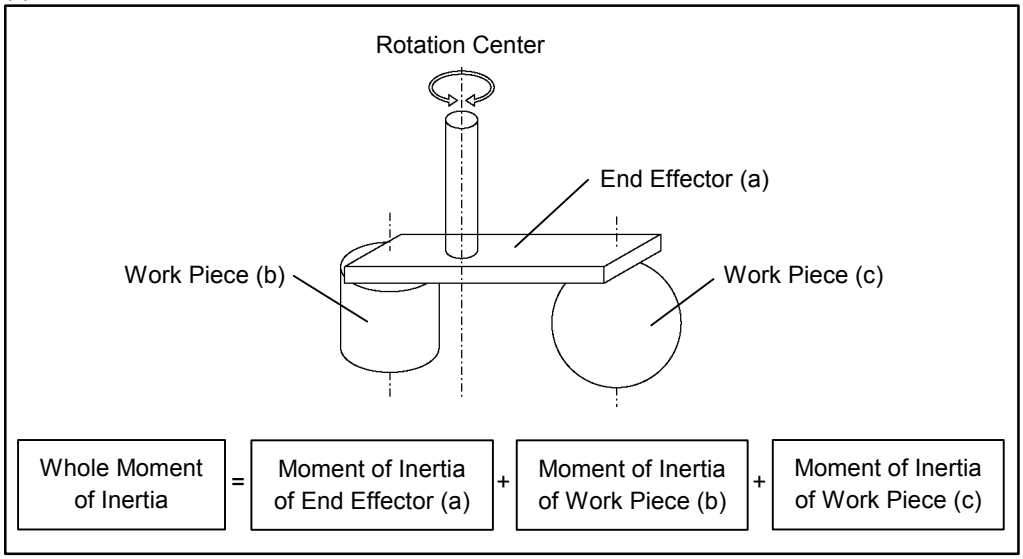

The methods for calculating the moment of inertia for (a), (b), and (c) are shown on this page or the next page. Find the whole moment of inertia using the basic formulas on the next page.

(a) Moment of inertia of a rectangular parallelepiped

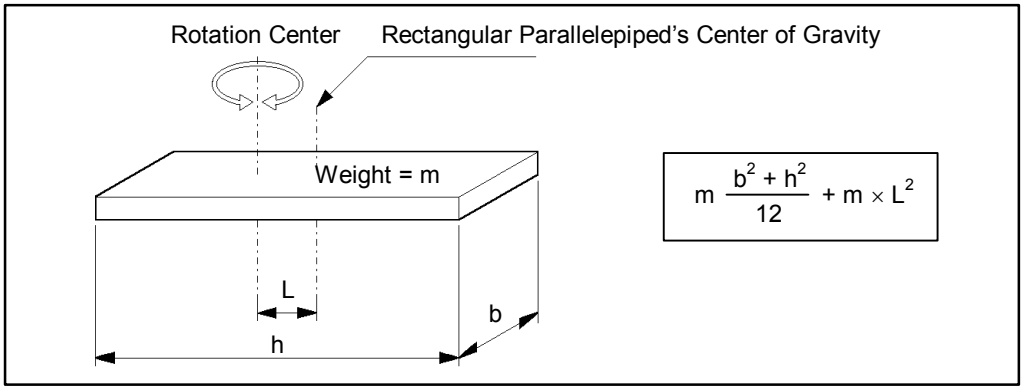

(b) Moment of inertia of a cylinder

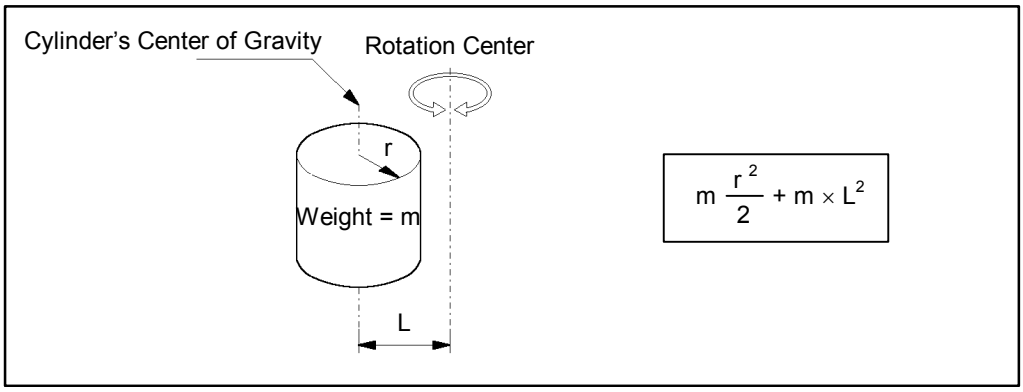

(c) Moment of inertia of a sphere

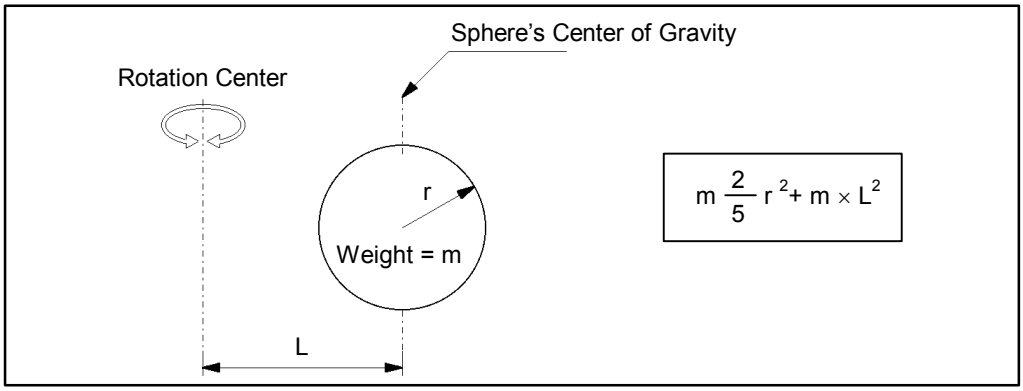

4.4 Precautions for Auto Acceleration/Deceleration

The speed and acceleration/deceleration of the Manipulator motion are automatically optimized according to the values of WEIGHT and INERTIA and the Manipulator's postures.

WEIGHT Setting

The speed and acceleration/deceleration of the Manipulator are controlled according to the load weight set by the WEIGHT command.
The more the load weight increases, the more the speed and acceleration/deceleration are reduced to prevent residual vibration.

INERTIA Setting

The acceleration/deceleration of Arm #J6 are controlled according to the moment of inertia set by the INERTIA command. The acceleration/deceleration of the whole Manipulator are controlled according to the eccentricity set by the INERTIA command. The more the moment of inertia and eccentricity of the load increase, the more the acceleration/deceleration are reduced.

Auto Acceleration/Deceleration According to Manipulator's Posture

The acceleration/deceleration are controlled according to the Manipulator's posture. When the Manipulator extends its arms or when the movement of the Manipulator produces vibration frequently, the acceleration/deceleration are reduced.

Set appropriate values for WEIGHT and INERTIA so that the Manipulator operation is optimized.

5. Motion Range

WARNING	■ When setting up the motion range for safety, both the pulse range and mechanical stops must always be set at the same time. Failure to set both of them together may cause serious safety problems.

The motion range is preset at the factory as explained in the section "Standard Motion Range" in the *Setup & Operation 2.3 Appearance*. This is the maximum motion range of the Manipulator.

There are three methods for setting the motion range described as follows:

1. Setting by pulse range (for all arms)
2. Setting by mechanical stops
3. Setting the Cartesian (rectangular) range in the X, Y coordinate system of the Manipulator

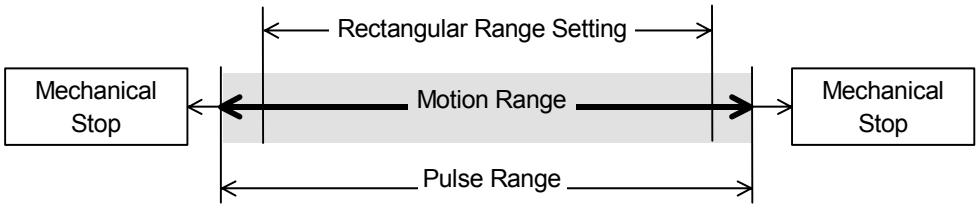

When the motion range is changed due to layout efficiency or safety, follow the descriptions in *5.1* to *5.4* to set the range.

5.1 Motion Range Setting by Pulse Range (for All Arms)

Pulses are the basic unit of Manipulator motion. The motion range of the Manipulator is controlled by the pulse range between the pulse lower limit and upper limit of each axis. Pulse values are read from the encoder output of the servo motor.

For the maximum pulse range, refer to the following sections.
The pulse range must be set inside of the mechanical stop range.

5.1.1 Max. Pulse Range of Arm #J1
5.1.2 Max. Pulse Range of Arm #J2
5.1.3 Max. Pulse Range of Arm #J3
5.1.4 Max. Pulse Range of Arm #J4
5.1.5 Max. Pulse Range of Arm #J5
5.1.6 Max. Pulse Range of Arm #J6

CAUTION	■ Do not set and/or use the Arm #J4 with pulse range beyond the maximum value. The Arm #J4 does not have a mechanical stop. The used of Arm #J4 in motion exceeding the maximum pulse range may cause inner wiring damage to and/or malfunction of the Manipulator.

NOTE

You can check the inner wiring torsion by removing the cable cover.

For details of procedure to remove the cable cover, refer to *Maintenance 3.7 Cable Guide Cover*.

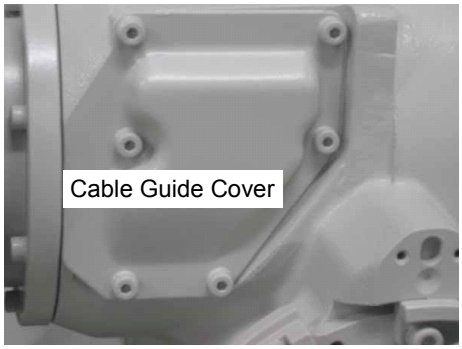

NOTE

Once the Manipulator receives an operating command, it checks whether the target position specified by the command is within the pulse range before operating. If the target position is out of the set pulse range, an error occurs and the Manipulator does not move.

The method for setting pulse ranges varies with the software used.

SPEL CT

The pulse range can be set on the [RANGE] panel shown by selecting the [Setup]- [Robot Parameters].
You may also execute the RANGE command from the [Command Execution] window.

EPSON RC+

EPSON RC+ 4.* or before (RC520)
The pulse range can be set on the [RANGE] panel shown by selecting the [Project]-[Robot Parameters].
You may also execute the RANGE command from the [EPSON RC+ Monitor Window].

EPSON RC+ 5.0 or later (RC170)
The pulse range can be set on the [Range] panel shown by selecting the [Tools]-[Robot manager].
You may also execute the Range command from the [Command Window].

5.1.1 Max. Pulse Range of Arm #J1

The 0 pulse position for Arm #J1 is shown in the figure below. Counterclockwise pulse values are positive (+) and clockwise pulse values are negative (−).

Top View

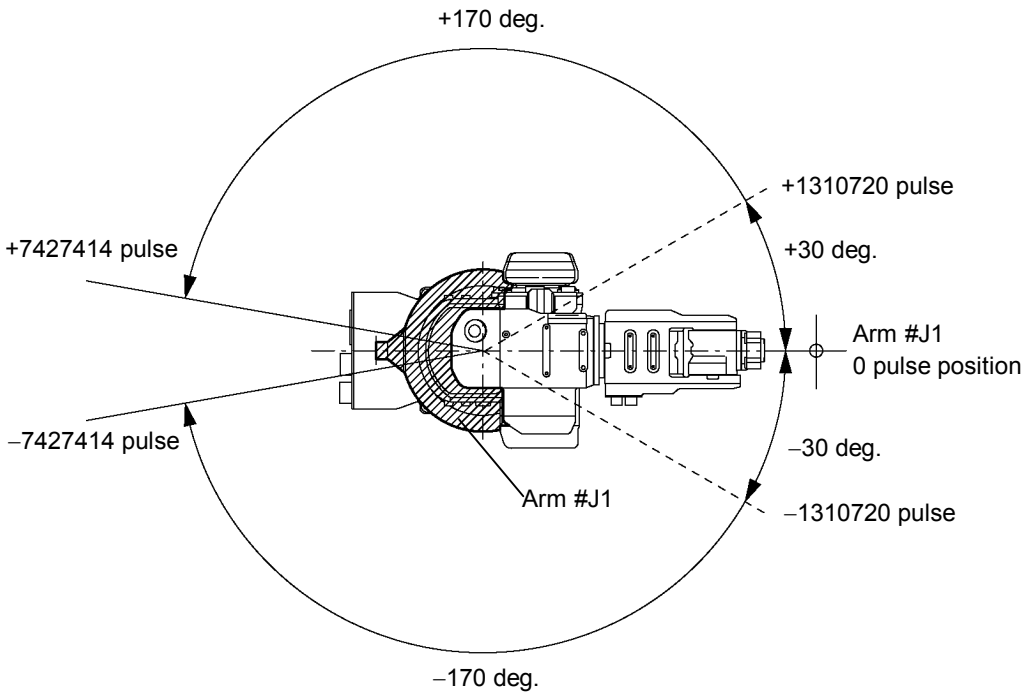

You can change the motion range setting of Arm #J1 by mechanical stops as shown in the following table. The setting methods are described in the *Setup & Operation 5.2 Motion Range Setting of Arm #J1 by Mechanical Stops*.

Motion Range of Arm #J1
±170 deg. (Standard)
±150 deg.
±135 deg.
±120 deg.
±105 deg.
±90 deg.
±75 deg.
±60 deg.
±45 deg.
±30 deg.
±15 deg.

5.1.2 Max. Pulse Range of Arm #J2

The 0 pulse position for Arm #J2 is shown in the figure below. Counterclockwise pulse values are positive (+) and clockwise pulse values are negative (−).

Lateral View

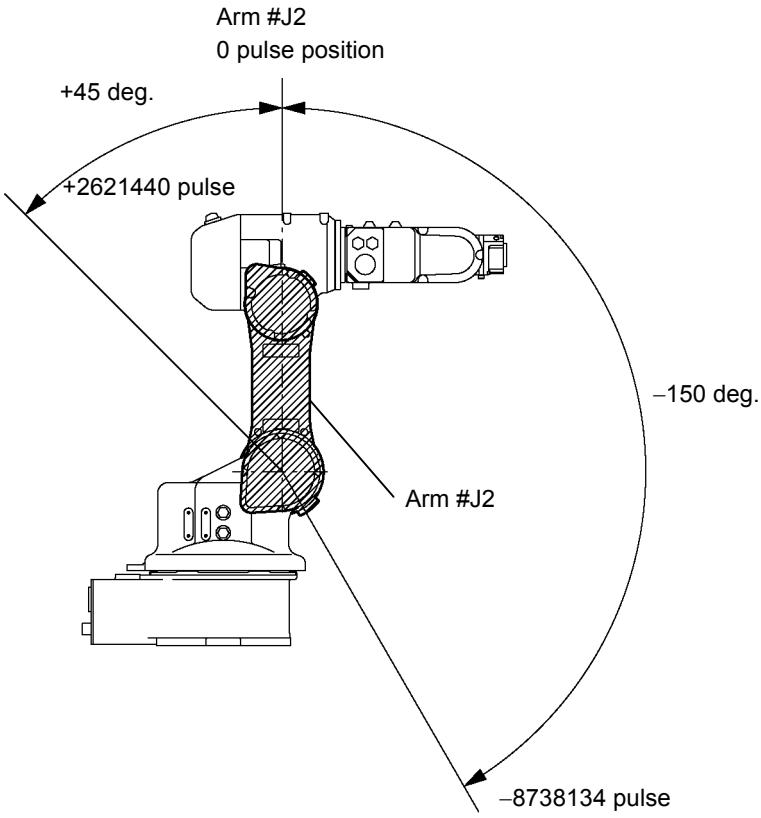

5.1.3 Max. Pulse Range of Arm #J3

The 0 pulse position for Arm #J3 is shown in the figure below. Counterclockwise pulse values are positive (+) and clockwise pulse values are negative (−).

Lateral View

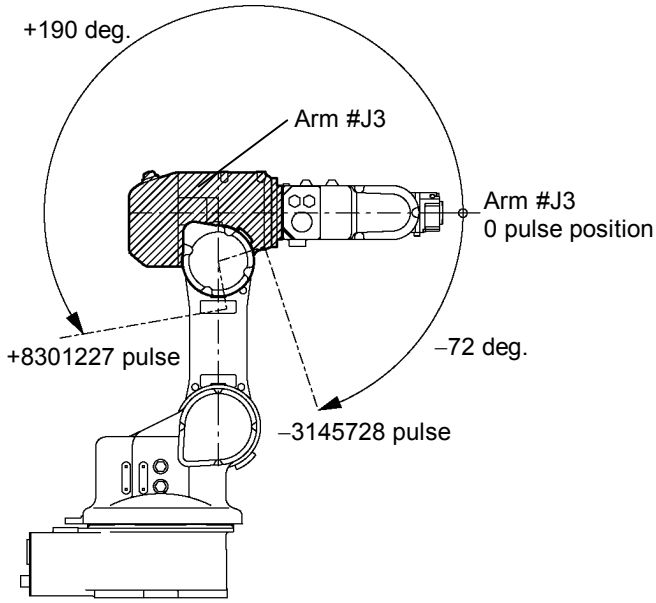

5.1.4 Max. Pulse Range of Arm #J4

The 0 pulse position for Arm #J4 is shown in the figure below. Clockwise pulse values are positive (+) and counterclockwise pulse values are negative (−).

Front View

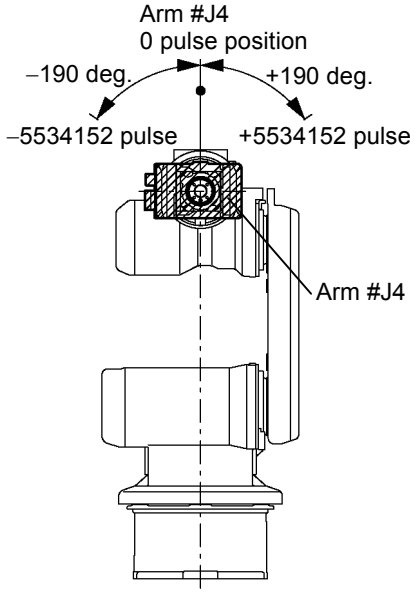

CAUTION	■ Do not set and/or use the Arm #J4 with pulse range beyond the maximum value. The Arm #J4 does not have a mechanical stop. The used of Arm #J4 in motion exceeding the maximum pulse range may cause inner wiring damage to and/or malfunction of the Manipulator.

NOTE

You can check the inner wiring torsion by removing the cable cover.

For details of procedure to remove the cable cover, refer to *Maintenance 3.7 Cable Guide Cover*.

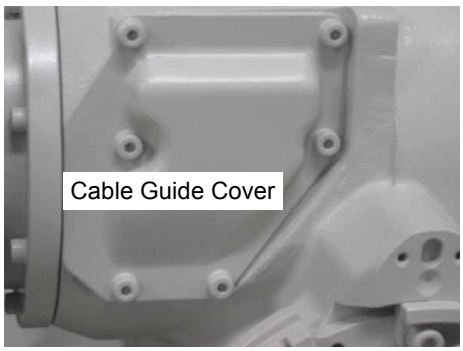

5.1.5 Max. Pulse Range of Arm #J5

The 0 pulse position for Arm #J5 is shown in the figure below. Counterclockwise pulse values are positive (+) and clockwise pulse values are negative (−).

Lateral View

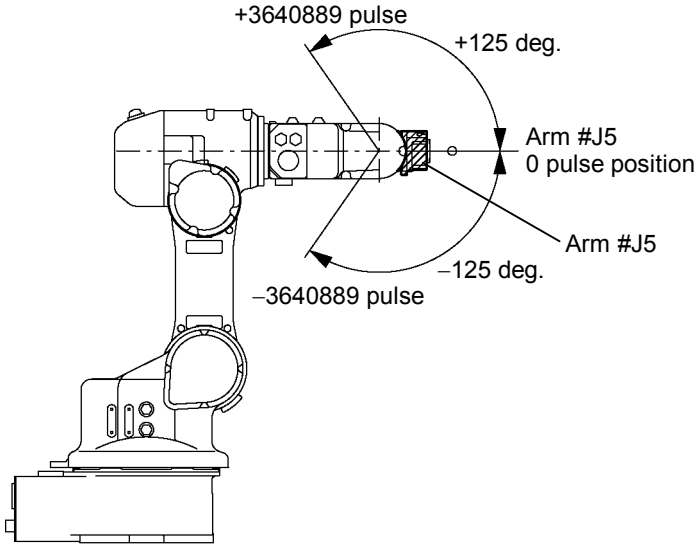

5.1.6 Max. Pulse Range of Arm #J6

The 0 pulse position for Arm #J6 is shown in the figure below. Clockwise pulse values are positive (+) and counterclockwise pulse values are negative (−).

Front View

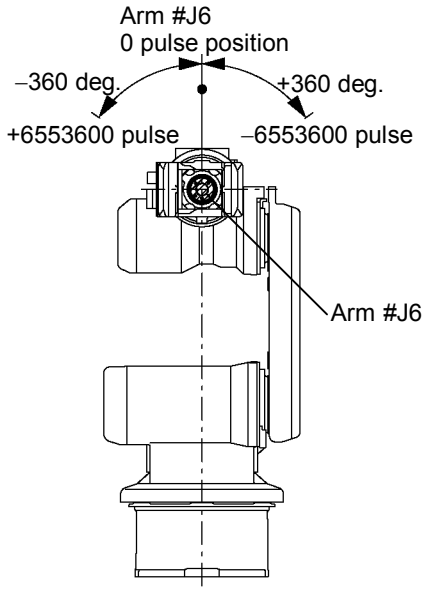

5.2 Motion Range Setting by Mechanical Stops

Mechanical stops physically limit the absolute area that the Manipulator can move.
Be sure to turn OFF the Controller in advance.

5.2.1 Motion Range Setting of Arm #J1

The mechanical stop can be set at the following angles; ±170 deg., ±150 deg., ±135 deg., ±120 deg., ±105 deg., ±90 deg., ±75 deg., ±60 deg., ±45 deg., ±30 deg., ±15 deg.
There are threaded holes corresponding to each angle on the Manipulator. Screw your preparing bolt into the threaded hole corresponding to the angle you desire (up to two holes).

M6×16 hexagon socket head cap bolt (with 6 plain washers)

Tightening torque 1000 N·cm (100 kgf·cm)

NOTE

Use a bolt conforming to the strength specified by ISO-898-1, property class: 12.9.

Back View of Arm #J1

(° = deg.)

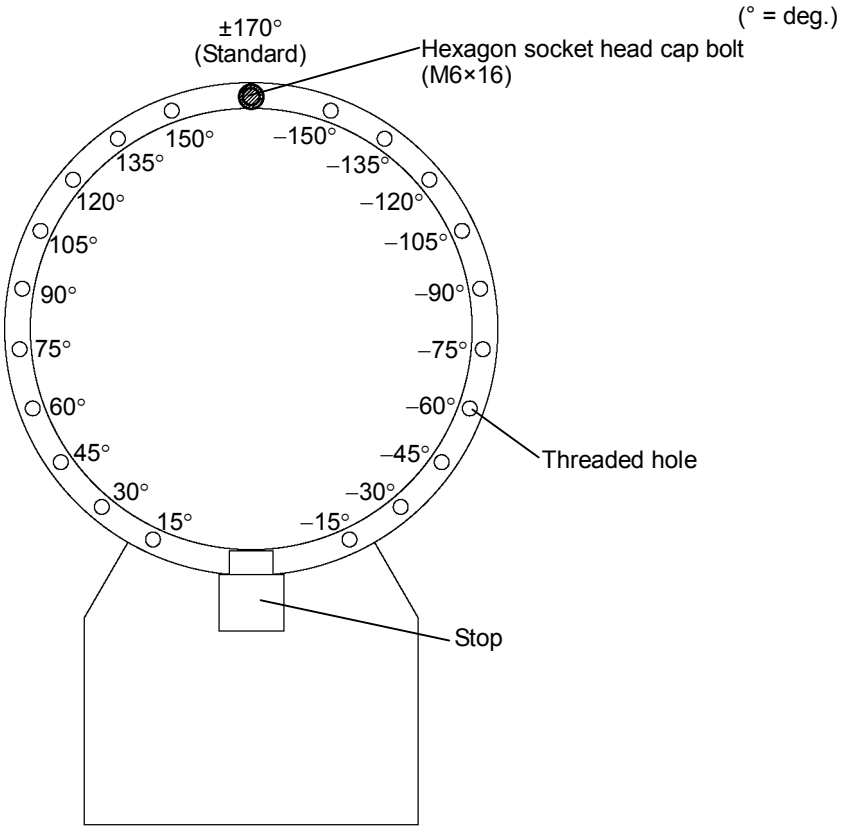

Re-specify the pulse range after changing the position of the mechanical stop.
For details on the pulse range setting, refer to the *Setup & Operation 5.1 Motion Range Setting by Pulse Range (for All Arms)*.

Setting Angle and Pulse Values of Arm #J1 (° = deg.)

Angle	+150°	+135°	+120°	+105°	+90°	+75°	+60°	+45°	+30°	+15°
Pulse	+6553600	+5898240	+5242880	+4587520	+3932160	+3276800	+2621440	+1966080	+1310720	+655360
Angle	−150°	−135°	−120°	−105°	−90°	−75°	−60°	−45°	−30°	−15°
Pulse	−6553600	−5898240	−5242880	−4587520	−3932160	−3276800	−2621440	−1966080	−1310720	−655360

NOTE

Be sure to set the pulse range without exceeding the pulse values corresponding to the mechanical stop's setting angles.

5.2.2 Motion Range Setting of Arm #J2 and #J3 (Option)

The motion range of Arm #J2 and #J3 can be set using the variable mechanical stops (option).
Attach the variable mechanical stops to the arms and set the motion range following the procedure below.

NOTE

The Manipulators equipped with the variable mechanical stop conform with the safety standard “ANSI/RIA R15.06”and “CE”, but do not with “UL1740”

Optional Variable Mechanical Stops

Arm	Variable Mechanical Stop	Bolt	Code
#J2	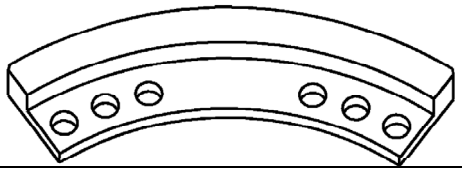	2-M5×20 hexagon socket head cap bolts (Strength ISO898-1, property class 12.9)	R12B031906
#J3	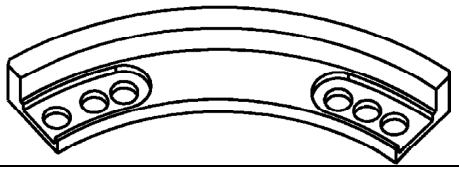	2-M5×15 hexagon socket head cap bolts (Strength ISO898-1, property class 12.9)	

Installation of J2 Variable Mechanical Stop

The standard motion range of Arm #J2 is -150 to +45 deg.
The variable mechanical stop (option) allows you to select the motion range from the following table.

(° = deg.)

Setting Motion Range	Pulse Value	Screw Hole	Installation Position
-150° to +45° (Standard)	-8738134 to +2621440	---	---
-71° to + 45°	-4136050 to +2621440	A	a, b
-79° to + 45°	-4602084 to +2621440	B	a, b
-35° to +45°	-2038898 to +2621440	B	b, c
-43° to + 45°	-2504932 to +2621440	C	b, c
-150° to -27°	-8738134 to +1572864	B	d, e

Screw Holes

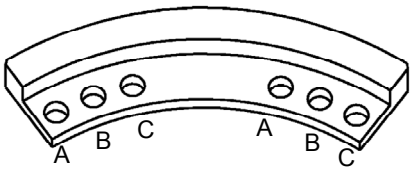

Installation Positions

(The figure below is a section view of Joint #J2 viewed from the J2 arm cover side.)

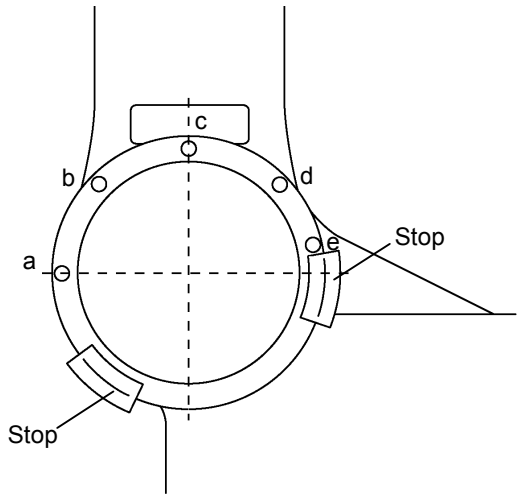

Installation Procedure

(1) Remove the screws at the installation positions corresponding to the motion range referring to the table above.

2-M5×16 hexagon socket head cap bolts

NOTE ☞ -Do not remove the screws more than three from the Manipulator at the same time when installing the variable mechanical stop.

(2) Secure the variable mechanical stop to the installation positions on Joint #2 with the bolts included with the stop using the specified screw holes.

2-M5×20 hexagon socket head cap bolts: Strength ISO898-1, property class 12.9

Tightening torque 600 N·cm (60 kgf·cm)

(3) Change the pulse range in accordance with the selected motion range. For details on the pulse range setting, refer to the *Setup & Operation 5.1 Motion Range Setting by Pulse Range (for All Arms)*.

NOTE ☞ - Be sure to set the pulse range without exceeding the pulse values corresponding to the mechanical stop's setting angles.

Reference: The Installation Position of J2 Variable Mechanical Stop

(° = deg.)

−71° to +45°

−79° to +45°

−35° to +45°

−43° to +45°

−150° to −27°

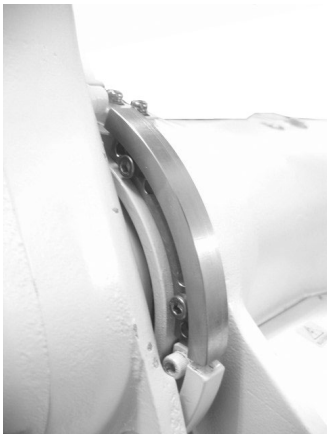

Installation of J3 Variable Mechanical Stop

The standard motion range of Arm #J3 is -72 to +190 deg.
The variable mechanical stop (option) allows you to select the motion range from the following table.

Setting Motion Range	Pulse Value	Screw Hole	Installation Position
-72° to +190° (Standard)	-3145728 to +8301227	---	---
+36° to +190°	+1572864 to +8301227	A	a, b
-72° to +77°	-3145728 to +3364185	B	c, d
-72° to +83°	-3145728 to +3626324	B	c, d

Screw Holes

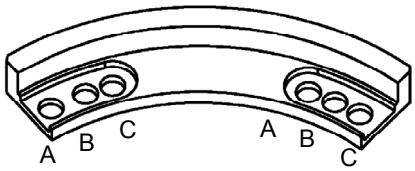

Installation Positions

(The figure below is a section view of Joint #J3 viewed from the J2 arm cover side.)

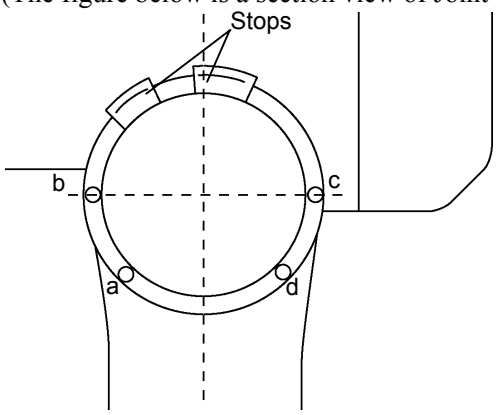

Installation Procedure

(1) Remove the screws at the installation positions corresponding to the motion range referring to the table above.
2-M5×16 hexagon socket head cap bolts

NOTE
Do not remove the screws more than three from the Manipulator at the same time when installing the variable mechanical stop.

(2) Secure the variable mechanical stop to the installation positions on Joint #3 with the bolts included with the stop using the specified screw holes.
2-M5×20 hexagon socket head cap bolts: Strength ISO898-1, property class 12.9
Tightening torque 600 N·cm (60 kgf·cm)

(3) Change the pulse range in accordance with the selected motion range. For details on the pulse range setting, refer to the *Setup & Operation 5.1 Motion Range Setting by Pulse Range (for All Arms)*.

NOTE
Be sure to set the pulse range without exceeding the pulse values corresponding to the mechanical stop's setting angles.

Reference: The Installation Position of J3 Variable Mechanical Stop

+36° to +190° (° = deg.)

–72° to +77°

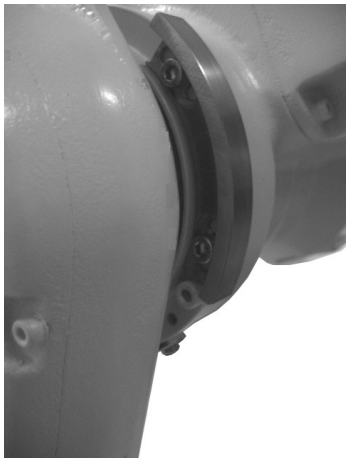

–72 to +83°

5.3 Restriction of Manipulator Operation by Joint Angle Combination of Arms #J1, #J2, and #J3

To prevent the arms of the Manipulator from interfering each other, the Manipulator operation is restricted in the specified motion range as shown below according to the joint angle combination of the Arm #J1, #J2, and #J3.

(1) Joint Angle Combination of Arm #J1 and #J2

The Manipulator operation is restricted and the Manipulator stops when the joint angles of the Arm #J1 and #J2 are within the gray areas in the following figure.

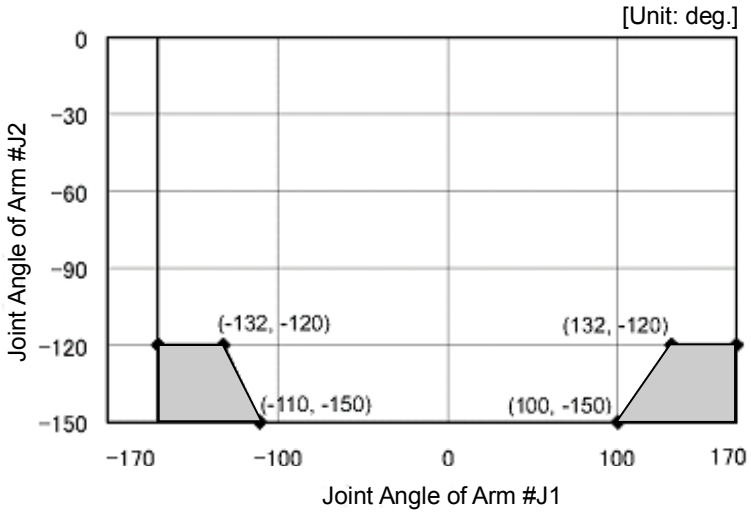

(2) Joint Angle Combination of Arm #J2 and #3

The Manipulator operation is restricted and the Manipulator stops when the joint angles of the Arm #J2 and #J3 are within the gray areas in the following figure.

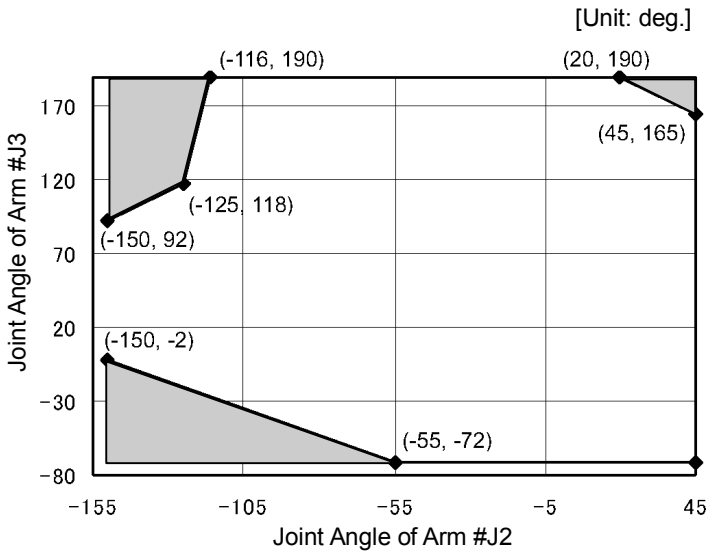

(3) Joint Angle Combination of Arm #J1, #J2, and #J3

The Manipulator operation is restricted and the Manipulator stops when the joint angle of the Arm #J1 is 128 deg. or more, or −128 deg. or less, and the joint angles of the Arms #J2 and #J3 are also within the gray area in the following figure.

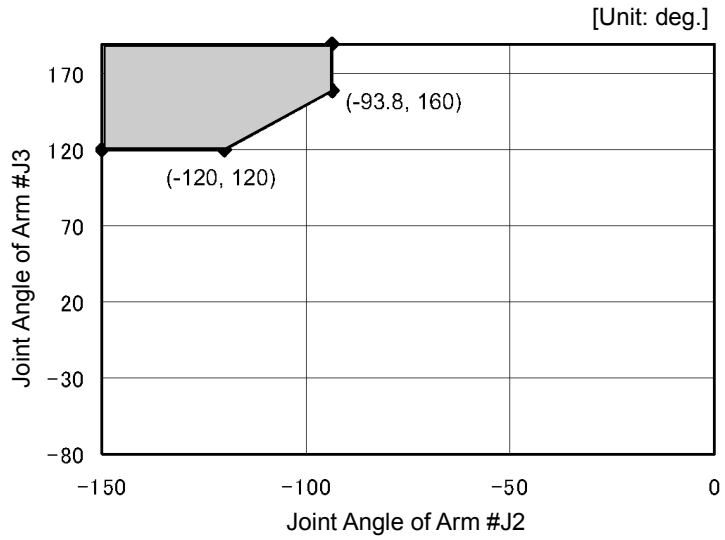

The restriction to Manipulator operation is enabled on the following conditions:

- During CP motion command execution
- You attempt to execute the motion command for moving the Manipulator to a target point (or pose) in the specified motion range.

The restriction to the Manipulator operation is disabled on the following conditions:

- The Arms of the Manipulator momentarily go through the specified motion range during the PTP motion command execution even though the joint angles of the Arms are in the gray areas of the figures above.

5.4 Coordinate System

The origin point is located where the Manipulator base intersects with the rotation axis of Joint #J1.
For details on the coordinate system, refer to the software manual.

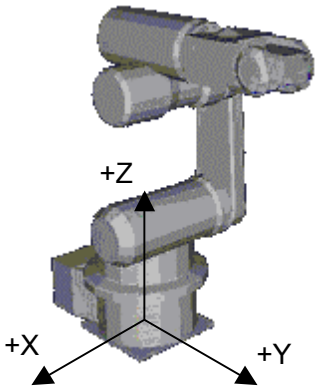

5.5 Setting the Cartesian (Rectangular) Range in the XY Coordinate System of the Manipulator

The Cartesian (rectangular) range in the XY coordinate system of the Manipulator is specified by the limited Manipulator operation area and the XYLIM setting.
The limited Manipulator operation area is defined so that the end effector does not interfere with the rear side of the Manipulator. The XYLIM setting is that you can set the upper and lower limits of the X and Y coordinates.

The limited Manipulator operation area and XYLIM setting apply only to the software. Therefore, these settings do not change the physical range. The maximum physical range is based on the position of the mechanical stops.

These settings are disabled during a joint jogging operation. Therefore, be careful not to allow the end effector to collide with the Manipulator or peripheral equipment.

The method for changing the XYLIM setting varies with the software used.

SPEL CT

Set the XYLIM setting on the [XYLIM] panel shown by selecting the [Setup]- [Robot Parameters].
You may also execute the XYLIM command from the [Command Execution] window.

EPSON RC+

EPSON RC+ 4.* or before (RC520)
Set the XYLIM setting on the [XYLIM] panel shown by selecting the [Project]-[Robot Parameters].
You may also execute the XYLIM command from the [EPSON RC+ Monitor Window].

EPSON RC+ 5.0 or later (RC170)
Set the XYLIM setting on the [XYZ Limits] panel shown by selecting the [Tools]-[Robot manager].
You may also execute the XYLim command from the [Command Window].

Maintenance

This volume contains maintenance procedures with safety precautions for Manipulators.

1. Safety Maintenance

Please read this manual and other relevant manuals carefully to understand safe maintenance procedures before performing any maintenance.

Only authorized personnel who have taken the safety training should be allowed to maintain the robot system. The safety training is the program for the industrial robot operator that follows the laws and regulations of each nation.
The personnel who have taken the safety training acquire knowledge of industrial robots (operations, teaching, etc.), knowledge of inspections, and knowledge of related rules/regulations. Only personnel who have completed the robot system-training and maintenance-training classes held by the manufacturer, dealer, or locally-incorporated company should be allowed to maintain the robot system.

WARNING	■ Do not remove any parts that are not covered in this manual. Follow the maintenance procedure strictly as described in this manual. Improper removal of parts or improper maintenance may not only cause improper function of the robot system but also serious safety problems. ■ Keep away from the Manipulator while the power is ON if you have not taken the training courses. Do not enter the operating area while the power is ON. Entering the operating area with the power ON is extremely hazardous and may cause serious safety problems as the Manipulator may move even though it seems to be stopped. ■ When you check the operation of the Manipulator after replacing parts, be sure to check it while you are outside of the safeguarded area. Checking the operation of the Manipulator while you are inside of the safeguarded area may cause serious safety problems as the Manipulator may move unexpectedly. ■ Before operating the robot system, make sure that both the Emergency Stop switches and safeguard switches function properly. Operating the robot system when the switches do not function properly is extremely hazardous and may result in serious bodily injury and/or serious damage to the robot system as the switches cannot fulfill their intended functions in an emergency.

WARNING	■ Be sure to connect the AC power cable to a power receptacle. DO NOT connect it directly to a factory power source. To shut off power to the robot system, pull out the power plug from the power source. Performing any work while connecting the AC power cable to a factory power source is extremely hazardous and may result in electric shock and/or malfunction of the robot system. ■ Before performing any replacement procedure, turn OFF the Controller and related equipment, and then pull out the power plug from the power source. Performing any replacement procedure with the power ON is extremely hazardous and may result in electric shock and/or malfunction of the robot system.

WARNING	■ Be sure to connect the cables properly. Do not allow unnecessary strain on the cables. (Do not put heavy objects on the cables. Do not bend or pull the cables forcibly.) The unnecessary strain on the cables may result in damage to the cables, disconnection, and/or contact failure. Damaged cables, disconnection, or contact failure is extremely hazardous and may result in electric shock and/or improper function of the robot system.

CAUTION	■ Carefully use alcohol, liquid gasket, and adhesive following respective instructions and also instructions below. Careless use of alcohol, liquid gasket, or adhesive may cause a fire and/or safety problems. - Never put alcohol, liquid gasket, or adhesive close to fire. - Use alcohol, liquid gasket, or adhesive while ventilating the room. - Wear protective gear including a mask, protective goggles, and oil-resistant gloves. - If alcohol, liquid gasket, or adhesive gets on your skin, wash the area thoroughly with soap and water. - If alcohol, liquid gasket, or adhesive gets into your eyes or mouth, flush your eyes or wash out your mouth with clean water thoroughly, and then see a doctor immediately. ■ Wear protective gear including a mask, protective goggles, and oil-resistant gloves during grease up. If grease gets into your eyes, mouth, or on your skin, follow the instructions below. If grease gets into your eyes : Flush them thoroughly with clean water, and then see a doctor immediately. If grease gets into your mouth : If swallowed, do not induce vomiting. See a doctor immediately. If grease just gets into your mouth, wash out your mouth with water thoroughly. If grease gets on your skin : Wash the area thoroughly with soap and water.

2. Periodic Inspection

Performing the inspection steps properly is essential to preventing trouble and maintaining safety. This section describes the schedule for maintenance inspections and the procedures.
Be sure to perform the maintenance inspections in accordance with the schedule.

2.1 Schedule for Maintenance Inspections

Inspection tasks are divided into five stages: daily, 4 months, 24 months, 48 months, and 96 months. Move up the regular checks when the Manipulator has been used for the following amount of time.

Inspection	Interval between Inspections	Accumulated Operating Time
Daily	Inspect every day.	
4-month	4 months	1000 hours
24-month	24 months	6000 hours
48-month	48 months	12000 hours
96-month	96 months	24000 hours

2.2 Inspection Tasks

Inspection Tasks	Inspection	Method	Inspection and Maintenance	Related Details
Tram mark	Daily	Visual	Check for tram mark misalignment or damage at the home position.	-
Motion range and Manipulator	Daily	Visual	Clean the area of motion range for each joint if dust or spatter is present. Check for damage and outside cracks.	-
Baseplate mounting bolts	4-month	Spanner, Wrench	Tighten loose bolts. Replace if necessary.	-
Cover mounting screws	4-month	Screw-driver, Wrench	Tighten loose screws. Replace if necessary.	-
Base connectors	4-month	Manual	Check for loose connectors.	-
J5 and J6 timing belts	48-month	Manual	Check for proper belt tension and wear.	8.3, 9.5
Cable unit *1	48-month	Visual, Multimeter	Check for conduction between the main connector of base and intermediate connector. *2 Check for wear of protective spring. *2	10
Battery unit	-	-	Replace the battery unit when an error warning that low battery status is occurring at startup of the software or every three years.	11
J1 reduction gear unit	24-month	Grease gun	Check for malfunction (Replace if necessary). Perform grease replenishment*3	2.3.1 4.2
J2 reduction gear unit	24-month	Grease gun	Check for malfunction (Replace if necessary). Perform grease replenishment *3	2.3.2 5.2
J3 reduction gear unit	24-month	Grease gun	Check for malfunction (Replace if necessary). Perform grease replenishment *3	2.3.3 6.2
J4 reduction gear unit	24-month	Grease gun	Check for malfunction (Replace if necessary). Perform grease replenishment *3	2.3.4 7.2
J5 reduction gear unit	24-month	Grease gun	Check for malfunction (Replace if necessary). Perform grease replenishment *3	2.3.5 8.2
J6 reduction gear unit	24-month	Grease gun	Check for malfunction (Replace if necessary). Perform grease replenishment *3	2.3.6 9.2
Overhaul	96-month	-	Please ask your distributor for details.	-

*1 Replace the cable unit every 24000 hours. Refer to the *Maintenance 10. Replacing the Cable Unit* for details.

*2 When checking for conduction with a multimeter, connect the battery (for backing up motor encoder) to the BAT and OBT connectors, which are encoder connectors for maintenance, on the motor side. Then, disconnect the encoder connector on the cable unit side from the motor. If you disconnect the encoder connector on the cable unit side from the motor before connecting the battery to the BAT and OBT connectors, the arm position data will be lost and the arm will need to be calibrated again.

*3 Replenish grease every 6000 hours. Refer to the *Maintenance 2.3 Grease Replenishment* for details.

2.3 Grease Replenishment

The reduction gear units need greasing at intervals of 6000 hours of operation time. Use only the grease specified.

WARNING	■ Move out of the safeguarded area before operating the Manipulator for run-in during grease replenishment. Operating the Manipulator while someone is inside of the safeguarded area is extremely hazardous and may cause serious safety problems.

WARNING	■ After the run-in, be sure to turn OFF the controller and related equipment, and then pull out the power plug from the power source. Then, continue the grease replenishment. Performing any grease procedure with the power ON is extremely hazardous and may result in electric shock and/or malfunction of the robot system.

CAUTION	■ Ensure that there is sufficient grease in the Manipulator. Operating the Manipulator with insufficient grease will damage sliding parts and/or result in insufficient function of the Manipulator. Once the parts are damaged, a lot of time and money will be required for the repairs. ■ Wear protective gear including a mask, protective goggles, and oil-resistant gloves during grease up. If grease gets into your eyes, mouth, or on your skin, follow the instructions below. If grease gets into your eyes : Flush them thoroughly with clean water, and then see a doctor immediately. If grease gets into your mouth : If swallowed, do not induce vomiting. See a doctor immediately. If grease just gets into your mouth, wash out your mouth with water thoroughly. If grease gets on your skin : Wash the area thoroughly with soap and water.

Grease Gun Lubrication Nozzle Shape

Use a commercially available grease gun.

We recommend the use of a grease gun with a nozzle shaped like that shown in the figure below and an outer diameter (øD) 13 mm or less.

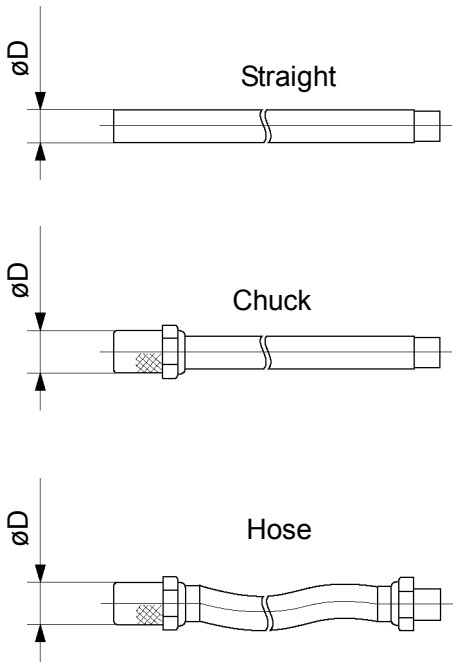

2.3.1 J1 Reduction Gear Unit

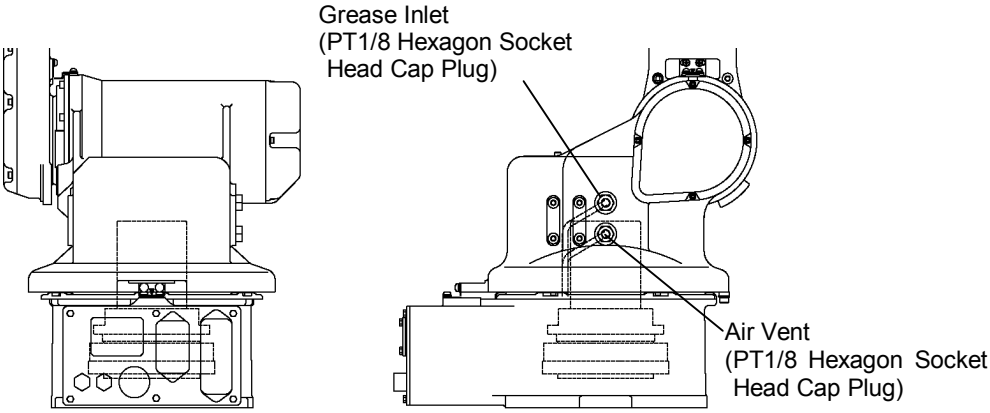

Maintenance Parts and Tools

	Name	Quantity	Note
Maintenance Parts	Grease for reduction gear (4BNo2)	25 g	R13B030302
	Liquid gasket (1206C)	Proper quantity	R13B031201
Tools	Hexagonal wrench (width across flats: 5 mm)	1	
	Grease nipple PT 1/8	1	
	Grease gun	1	
	Wiping cloth	1	For wiping grease

Grease Replenishment Procedure

(1) Remove the hexagon socket head cap plug from the grease inlet.

(2) Attach a grease nipple PT1/8 to the grease inlet. (The grease nipple is supplied with the Manipulator.)

(3) Remove the hexagon socket head cap plug from the air vent.

NOTE ☞ Be sure to remove the plug from the air vent. When grease is being added while the plug is in the air vent, the internal pressure increases. Increasing internal pressure may cause malfunction of the robot system.

(4) Pump grease into the reduction gear unit from the grease inlet using a grease gun.
Grease : Grease for reduction gear (4BNo2)
Quantity : 25 g

(5) Operate the Manipulator at low power mode speed for one hour to run-in the grease.

(6) Wipe off excess grease exhausted from the air vent with wiping cloth.

(7) Apply liquid gasket to the hexagon socket head cap plug and attach the plug to the air vent.

(8) Remove the grease nipple from the grease inlet.

(9) Apply liquid gasket to the hexagon socket head cap plug and attach the plug to the grease inlet.

2.3.2 J2 Reduction Gear Unit

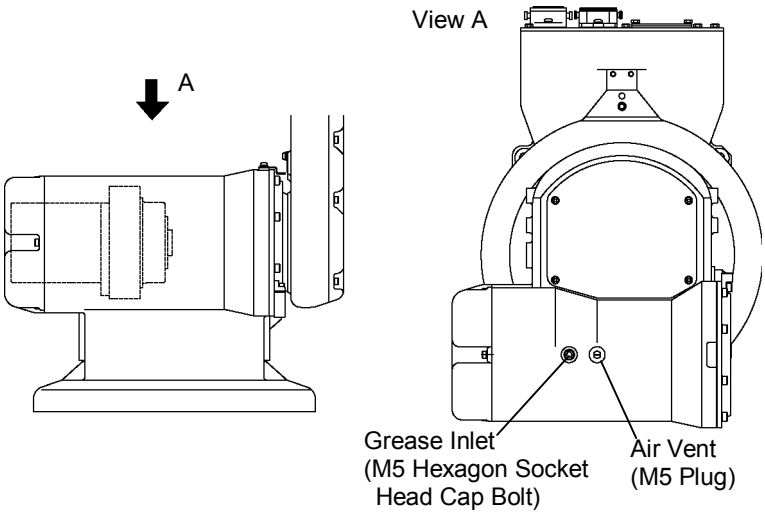

Maintenance Parts and Tools

	Name	Quantity	Note
Maintenance Parts	Grease for reduction gear (4BNo2)	30 g	R13B030302
	Liquid gasket (1206C)	Proper quantity	R13B031201
Tools	Hexagonal wrench (width across flats: 4 mm)	1	
	Grease nipple A-MT6×1	1	
	Flat blade screwdriver	1	
	Grease gun	1	
	Wiping cloth	1	For wiping grease

Grease Replenishment Procedure

(1) Remove the hexagon socket head cap bolt from the grease inlet.

(2) Attach a grease nipple A-MT6×1 to the grease inlet. (The grease nipple is supplied with the Manipulator.)

(3) Remove the plug from the air vent using a flat blade screwdriver.

NOTE ☞ Be sure to remove the plug from the air vent. When grease is being added while the plug is in the air vent, the internal pressure increases. Increasing internal pressure may cause malfunction of the robot system.

(4) Pump grease into the reduction gear unit from the grease inlet using a grease gun.
Grease : Grease for reduction gear (4BNo2)
Quantity : 30 g

(5) Operate the Manipulator at low power mode speed for one hour to run-in the grease.

(6) Wipe off excess grease exhausted from the air vent with wiping cloth.

(7) Apply liquid gasket to the plug and attach the plug to the air vent.

(8) Remove the grease nipple from the grease inlet.

(9) Apply liquid gasket to the hexagon socket head cap bolt and attach the bolt to the grease inlet.

2.3.3 J3 Reduction Gear Unit

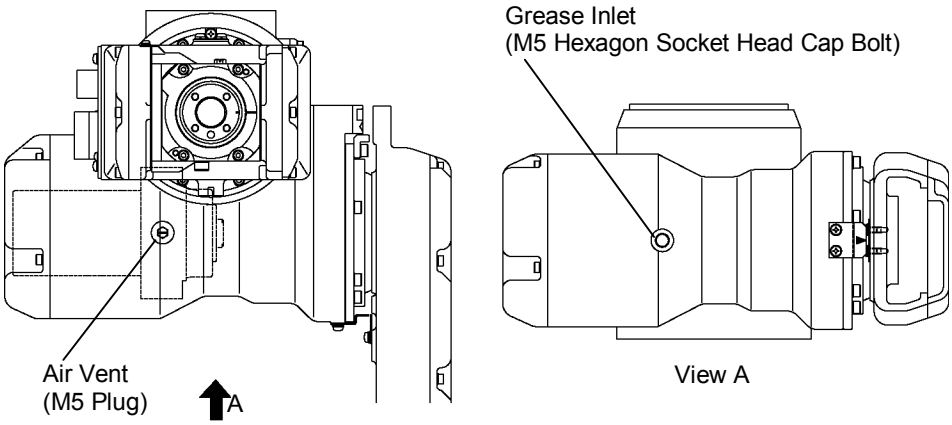

Maintenance Parts and Tools

	Name	Quantity	Note
Maintenance Parts	Grease for reduction gear (4BNo2)	20 g	R13B030302
	Liquid gasket (1206C)	Proper quantity	R13B031201
Tools	Hexagonal wrench (width across flats: 4 mm)	1	
	Grease nipple A-MT6×1	1	
	Flat blade screwdriver	1	
	Grease gun	1	
	Wiping cloth	1	For wiping grease

Grease Replenishment Procedure

(1) Remove the hexagon socket head cap bolt from the grease inlet.

(2) Attach a grease nipple A-MT6×1 to the grease inlet. (The grease nipple is supplied with the Manipulator.)

(3) Remove the plug from the air vent using a flat blade screwdriver.

NOTE ☞ Be sure to remove the plug from the air vent. When grease is being added while the plug is in the air vent, grease will go inside the motor and may cause malfunction of the robot system.

(4) Pump grease into the reduction gear unit from the grease inlet using a grease gun.
Grease : Grease for reduction gear (4BNo2)
Quantity : 20 g

(5) Operate the Manipulator at low power mode speed for one hour to run-in the grease.

(6) Wipe off excess grease exhausted from the air vent with wiping cloth.

(7) Apply liquid gasket to the plug and attach the plug to the air vent.

(8) Remove the grease nipple from the grease inlet.

(9) Apply liquid gasket to the hexagon socket head cap bolt and attach the bolt to the grease inlet.

2.3.4 J4 Reduction Gear Unit

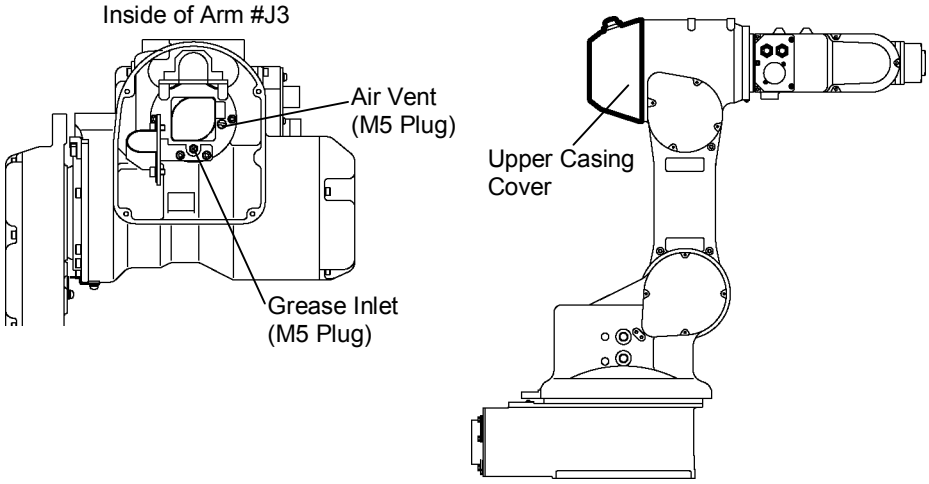

Maintenance Parts and Tools

	Name	Quantity	Note
Maintenance Parts	Grease for reduction gear (4BNo2)	7 g	R13B030302
	Liquid gasket (1206C)	Proper quantity	R13B031201
Tools	Hexagonal wrench (width across flats: 3 mm)	1	
	Grease Nipple (A-MT6×1)	1	
	Flat blade screwdriver	1	
	Grease gun	1	
	Wiping cloth	1	For wiping grease

Grease Replenishment Procedure

(1) Remove the bolts. Then, remove the upper casing cover from Arm #J3.
4-M4×12 hexagon socket head cap bolts with plain washers

(2) Remove the plug from the air vent using a flat blade screwdriver.

NOTE ☞ Be sure to remove the plug from the air vent. When grease is being added while the plug is in the air vent, the internal pressure increases. Increasing internal pressure may cause malfunction of the robot system.

(3) Remove the plug from the grease inlet.

(4) Attach a grease nipple A-MT6×1 to the grease inlet. (The grease nipple is supplied with the Manipulator.)

(5) Pump grease into the reduction gear unit from the grease inlet using a grease gun.
Grease : Grease for reduction gear (4BNo2)
Quantity : 7 g

(6) Operate the Manipulator at low power mode speed for one hour to run-in the grease.

(7) Wipe off excess grease exhausted from the air vent with wiping cloth.

(8) Apply liquid gasket to the plug and attach the plug to the air vent.

(9) Apply liquid gasket to the bolts and secure the upper casing cover with the bolts.
4-M4×12 hexagon socket head cap bolts with plain washers

2.3.5 J5 Reduction Gear Unit

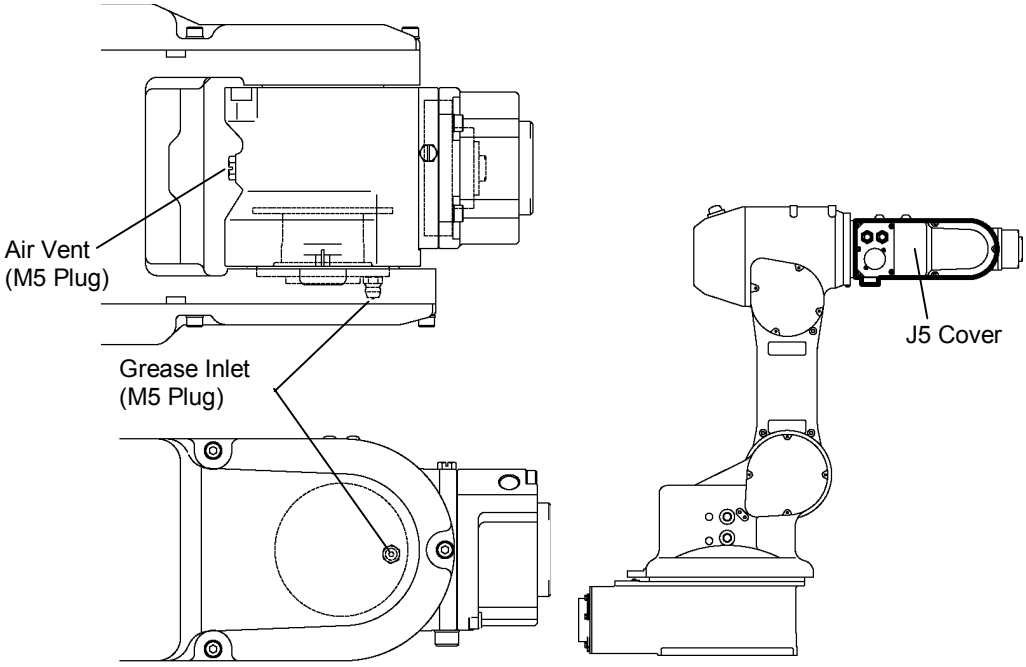

Maintenance Parts and Tools

	Name	Quantity	Note
Maintenance Parts	Grease for reduction gear (4BNo2)	5 g	R13B030302
	Liquid gasket (1206C)	Proper quantity	R13B031201
Tools	Hexagonal wrench (width across flats: 3 mm)	1	
	Grease Nipple A-MT6×1	1	
	Flat blade screwdriver	1	
	Grease gun	1	
	Wiping cloth	1	For wiping grease

Grease Replenishment Procedure

(1) Remove the bolts. Then, remove the J5 cover from Arm #J4.
5-M4×12 hexagon socket head cap bolts with plain washers

(2) Remove the plug from the air vent using a flat blade screwdriver.

NOTE
Be sure to remove the plug from the air vent. When grease is being added while the plug is in the air vent, the internal pressure increases. Increasing internal pressure may cause malfunction of the robot system.

(3) Remove the plug from the grease inlet.

(4) Attach a grease nipple A-MT6×1 to the grease inlet. (The grease nipple is supplied with the Manipulator.)

(5) Pump grease into the reduction gear unit from the grease inlet using a grease gun.
Grease : Grease for reduction gear (4BNo2)
Quantity : 5 g

(6) Operate the Manipulator at low power mode speed for one hour to run-in the grease.

(7) Wipe off excess grease exhausted from the air vent with wiping cloth.

(8) Apply liquid gasket to the plug and attach the plug to the air vent.

(9) Secure the J5 cover with the bolts.
5-M4×12 hexagon socket head cap bolts with plain washers

2.3.6 J6 Reduction Gear Unit

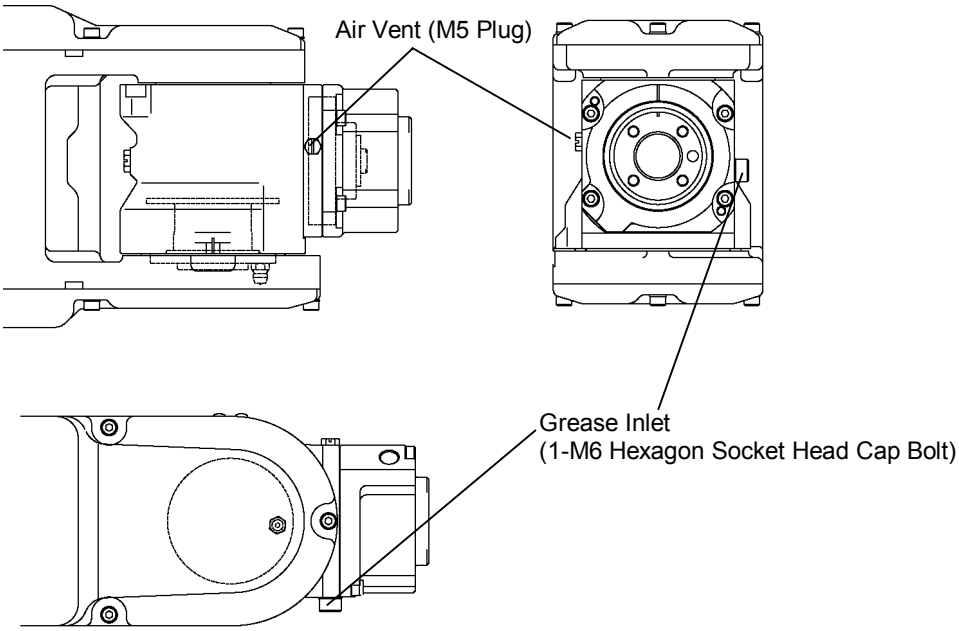

Maintenance Parts and Tools

	Name	Quantity	Note
Maintenance Parts	Grease for reduction gear (4BNo2)	5 g	R13B030302
	Liquid gasket (1206C)	Proper quantity	R13B031201
Tools	Hexagonal wrench (width across flats: 5 mm)	1	
	Grease nipple A-MT6×1	1	
	Flat blade screwdriver	1	
	Grease gun	1	
	Wiping cloth	1	For wiping grease

Grease Replenishment Procedure

(1) Remove the hexagon socket head cap bolt from the grease inlet.

(2) Attach a grease nipple A-MT6×1 to the grease inlet. (The grease nipple is supplied with the Manipulator.)

(3) Remove the plug from the air vent using a flat blade screwdriver.

NOTE ☞ Be sure to remove the plug from the air vent. When grease is being added while the plug is in the air vent, the internal pressure increases. Increasing internal pressure may cause malfunction of the robot system.

(4) Pump grease into the reduction gear unit from the grease inlet using a grease gun.
Grease : Grease for reduction gear (4BNo2)
Quantity : 5 g

(5) Operate the Manipulator at low power mode speed for one hour to run-in the grease.

(6) Wipe off excess grease exhausted from the air vent with wiping cloth.

(7) Apply liquid gasket to the plug and attach the plug to the air vent.

(8) Remove the grease nipple from the grease inlet.

(9) Apply liquid gasket to the hexagon socket head cap bolt and attach the bolt to the grease inlet.

2.4 Tightening Hexagon Socket Head Cap Bolts

Hexagon socket head cap bolts are used where mechanical strength is required. These bolts are fastened with the tightening torques shown in the following table.
When it is necessary to refasten these bolts during procedures in this manual (except special cases as noted), use a torque wrench so that the bolts are fastened with the appropriate tightening torques as shown below.

Bolt	Tightening Torque	
M3	245 N·cm	(25 kgf·cm)
M4	490 N·cm	(50 kgf·cm)
M5	980 N·cm	(100 kgf·cm)
M6	1,760 N·cm	(180 kgf·cm)
M8	3,720 N·cm	(380 kgf·cm)
M10	7,350 N·cm	(750 kgf·cm)
M12	12,740 N·cm	(1,300 kgf·cm)

We recommend that the bolts aligned on circumference should be fastened in a crisscross pattern as shown in the figure below.

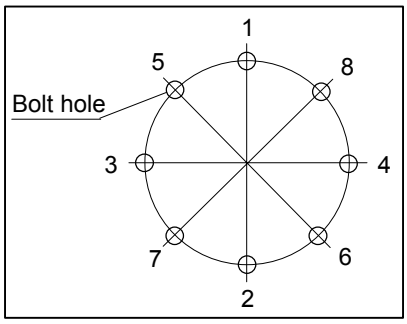

Do not fasten all bolts securely at one time. Divide the number of times that the bolts are fastened into two or three times and fasten the bolts securely with a hexagonal wrench. Then, use a torque wrench so that the bolts are fastened with the tightening torques shown the table above.

3. Removing and Installing the Covers

All procedures for removing and installing covers in maintenance are described in this chapter.

WARNING	■ Before performing any replacement procedure, turn OFF the Controller and related equipment, and then pull out the power plug from the power source. Performing any replacement procedure with the power ON is extremely hazardous and may result in electric shock and/or malfunction of the robot system. ■ Be sure to connect the AC power cable to a power receptacle. DO NOT connect it directly to a factory power source. To shut off power to the robot system, pull out the power plug from the power source. Performing any work while connecting the AC power cable to a factory power source is extremely hazardous and may result in electric shock and/or malfunction of the robot system. ■ Be careful not to get any foreign substances in the Manipulator, connectors, and pins during maintenance. Turning ON the power to the robot system when any foreign substances exist in them is extremely hazardous and may result in electric shock and/or malfunction of the robot system. ■ When installing the cover, be careful not to allow the cables to interfere with the cover mounting and do not bend these cables forcibly to push them into the cover. Unnecessary strain on cables may result in damage to the cables, disconnection, and/or contact failure. Damaged cables, disconnection, or contact failure is extremely hazardous and may result in electric shock and/or improper function of the robot system. When routing the cables, observe the cable locations after removing the cover. Be sure to place the cables back to their original locations.

CAUTION	■ Carefully use alcohol, liquid gasket, and adhesive following respective instructions and also instructions below. Careless use of alcohol, liquid gasket, or adhesive may cause a fire and/or safety problems. - Never put alcohol, liquid gasket, or adhesive close to fire. - Use alcohol, liquid gasket, or adhesive while ventilating the room. - Wear protective gear including a mask, protective goggles, and oil-resistant gloves. - If alcohol, liquid gasket, or adhesive gets on your skin, wash the area thoroughly with soap and water. - If alcohol, liquid gasket, or adhesive gets into your eyes or mouth, flush your eyes or wash out your mouth with clean water thoroughly, and then see a doctor immediately.

3.1 Battery Cover

You must remove the battery cover in order to replace the battery unit (lithium battery). The battery cover is located on the upper left of the connector plate. The words "LITHIUM BATTERY" are printed on the cover.

Tools

Name	Quantity
Cross-point screwdriver	1

Removal

(1) Turn OFF the power for the Controller.

(2) Disconnect all connectors from the connector plate (outside).

(3) Remove the screws, and then remove the battery cover and gasket from the connector plate.

4-M4×8 mounting screws for the battery cover

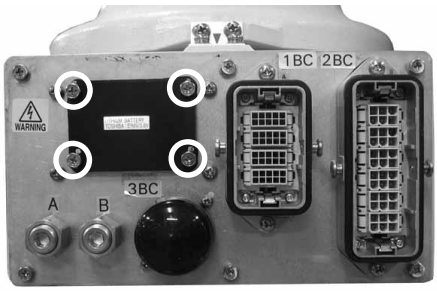

NOTE

Do not lose the gasket between the battery cover and connector plate.

Installation

(1) Place the gasket between the battery cover and the connector plate. Then, secure the battery cover to the connector plate with the screws.

4-M4×8 mounting screws for the battery cover

(2) Connect the connectors that were disconnected from the connector plate in step (2).

3.2 J1 Cover

You must remove the J1 cover in order to perform maintenance work or replacement on/of the items listed below.

J1 motor J1 reduction gear unit Cables
J2 motor J2 reduction gear unit

Tools

Name	Quantity
Hexagonal wrench (width across flats: 3 mm)	1
Threaded rod (M4) for tap	2

Remove the bolts and then remove the J1 cover.

4-M4×10 hexagon socket head cap bolts with plain washers
2-M4 taps

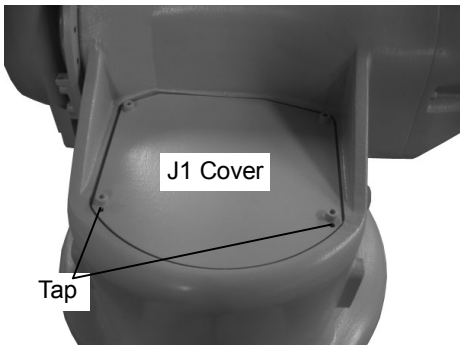

3.3 J2 Cover

You must remove the J2 cover in order to perform maintenance work on the items listed below.

J2 motor
J2 reduction gear unit

Tools

Name	Quantity
Hexagonal wrench (width across flats: 3 mm)	1

Remove the bolts and then remove the J2 cover.

4-M4×12 hexagon socket head cap bolts with plain washers

3.4 J3 Cover

You must remove the J3 cover in order to perform maintenance work on the items listed below.

J3 motor

J3 reduction gear unit

Tools

Name	Quantity
Hexagonal wrench (width across flats: 3 mm)	1

Remove the bolts and then remove the J3 cover.

4-M4×12 hexagon socket head cap bolts with plain washers

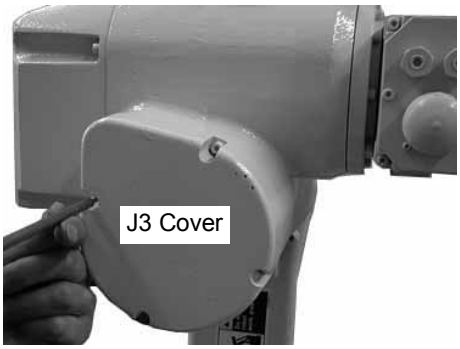

3.5 J2 Arm Cover

You must remove the J2 arm cover in order to replace cables.

Tools

Name	Quantity
Hexagonal wrench (width across flats: 3 mm)	1

Remove the bolts and then remove the J2 arm cover.

12-M4×8 hexagon socket head cap bolts with plain washers

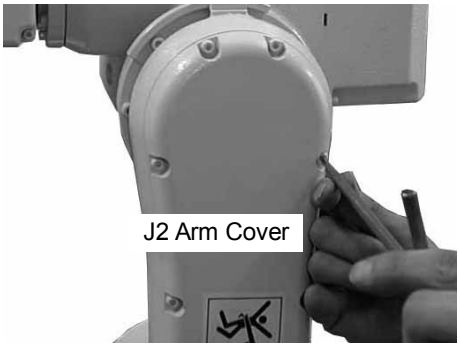

3.6 Upper Casing Cover

You must remove the upper casing cover in order to perform maintenance work or replacement on/of the items listed below.

J3 motor	J3 reduction gear unit	Cables
J4 motor	J4 reduction gear unit	LED lamp

Maintenance Parts and Tools

	Name	Quantity	Note
Maintenance Parts	Liquid gasket (1206C)	Proper quantity	R13B031201
Tools	Hexagonal wrench (width across flats: 3 mm)	1	
	Flat blade screwdriver	1	
	Scraper	1	
	Alcohol	Proper quantity	
	Wiping cloth	1	For wiping liquid gasket

Removal

(1) Remove the bolts from the upper casing cover.
4-M4×12 hexagon socket head cap bolts with plain washers

(2) Insert a flat blade screwdriver or similar tool into the slit and remove the upper casing cover.

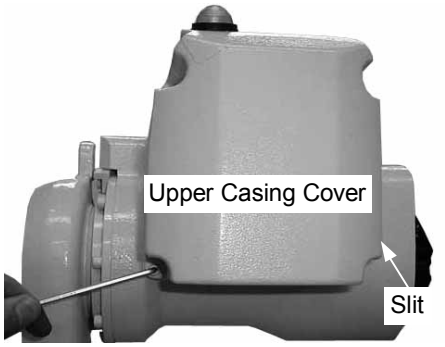

NOTE

There is an LED lamp cable between the Manipulator and the cover. Be careful not to pull on this cable when performing maintenance work.

(3) Unplug the LED lamp connectors (red U, black V).

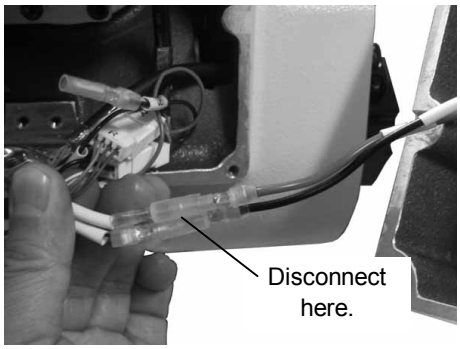

(4) Remove caked-on liquid gasket residue with a scraper or similar tool.

Installation

(1) Plug in the LED lamp connectors (red U, black V).

(2) Apply liquid gasket to those surfaces of the upper casing cover and the Manipulator that make contact with each other.

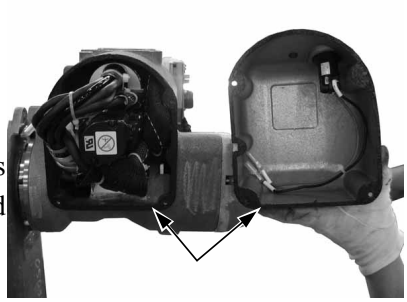

NOTE ☞ Wipe off any excess liquid gasket from other parts of the Manipulator with a wiping cloth treated with alcohol.

(3) Apply liquid gasket to the bolts and fasten the upper casing cover into place with the bolts.

4-M4×12 hexagon socket head cap bolts with plain washers

NOTE ☞ Make sure that the cable does not get caught between the upper casing cover and the Manipulator.

NOTE ☞ Wipe off any excess liquid gasket on other parts with a wiping cloth treated with alcohol.

3.7 Cable Guide Cover

Remove the cable guide cover when wiring the cables between the wrist and the upper casing.

Maintenance Parts and Tools

	Name	Quantity	Note
Maintenance Parts	Liquid gasket (1206C)	Proper quantity	R13B031201
Tools	Hexagonal wrench (width across flats: 3 mm)	1	
	Flat blade screwdriver	1	
	Scraper	1	
	Alcohol	Proper quantity	
	Wiping cloth	1	For wiping liquid gasket

Removal

(1) Remove the bolts to detach the cable guide cover.
6-M4×8 hexagon socket head cap bolts with disc spring washers

(2) Insert a flat blade screwdriver or similar tool into the slit and remove the cable guide cover.

(3) Remove caked-on liquid gasket residue with a scraper or similar tool.

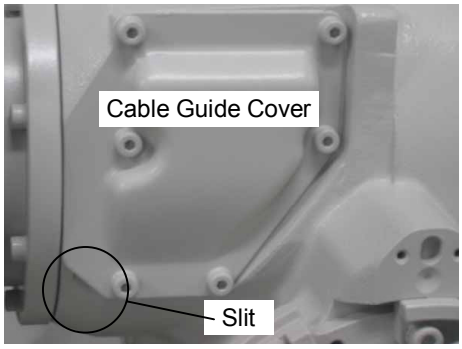

Installation

(1) Apply liquid gasket to those surfaces of the cable guide cover and the Manipulator that make contact with each other.

NOTE

Wipe off any excess liquid gasket with a wiping cloth treated with alcohol.

(2) Fasten the cable guide cover into place with the bolts.
6-M4×8 hexagon socket head cap bolts with disc spring washers

3.8 J5 Cover

You must remove the J5 cover in order to perform maintenance work or replacement on/of the items listed below.

J5 motor	J5 reduction gear unit	J5 timing belt	J6 oil seal
J6 motor	J6 reduction gear unit	J6 bearing	Cables

Maintenance Parts and Tools

	Name	Quantity	Note
Maintenance Parts	Liquid gasket (1206C)	Proper quantity	R13B031201
Tools	Hexagonal wrench (width across flats: 3 mm)	1	
	Flat blade screwdriver	1	
	Nipper	1	
	Scraper	1	
	Alcohol	Proper quantity	
	Wiping cloth	1	For wiping liquid gasket
Materials	Wire tie	2	

Removal

(1) Remove the bolts from the J5 cover.
5-M4×12 hexagon socket head cap bolts with plain washers

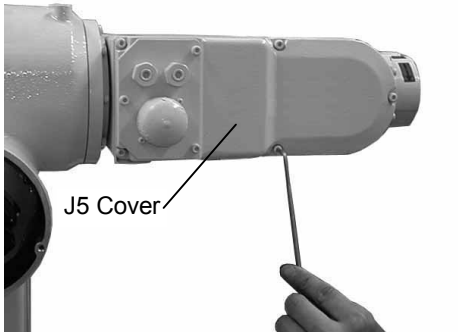

(2) Insert a flat blade screwdriver or similar tool into the slit and open the J5 cover.

NOTE ☞ The J5 cover cannot be removed since the pneumatic tubes are connected inside the J5 cover.

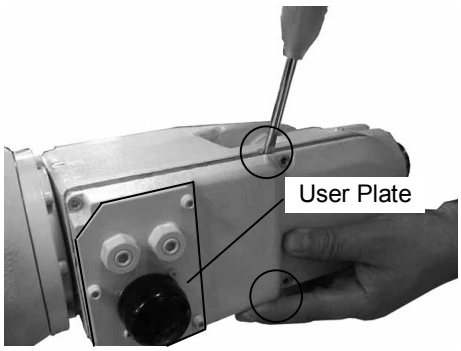

(3) Unplug two pneumatic tubes (1 blue, 1 black) located on the back of the user plate and then remove the J5 cover.

NOTE ☞ Press on the couplings to remove the pneumatic tubes.
Be careful not to damage the couplings.

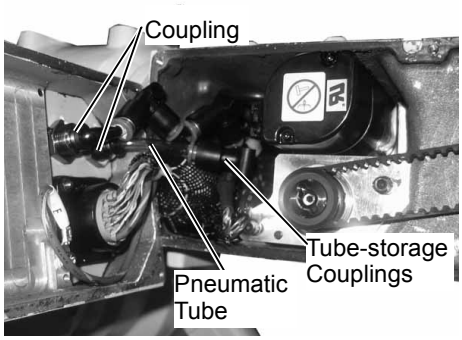

NOTE

To replace the cable, remove the tube-storage couplings from the pneumatic tubes. Do not lose the tube-storage couplings since they are used again.

(4) Cut the two wire ties that bind the user wiring connector packs and move them from the connectors.

(5) Unplug the user wiring connectors (S1, S2, S3) and remove the connector packs.

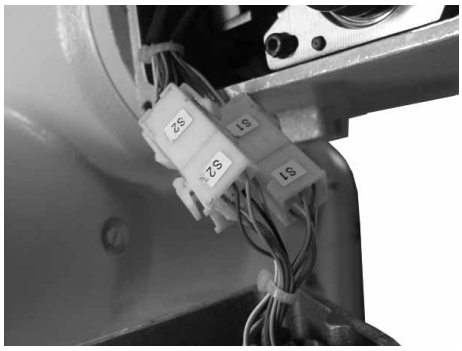

(6) Remove caked-on liquid gasket residue with a scraper or similar tool.

Installation

(1) Put the connector packs to the cables

(2) Plug in the user wiring connectors (S1, S2, S3).

(3) Cover the connectors with the connector packs and bind the connector packs with two wire ties.

(4) Attach the pneumatic tubes to the back of the user plate. Attach the black one to "A" and the blue one to "B" as shown in the photo.

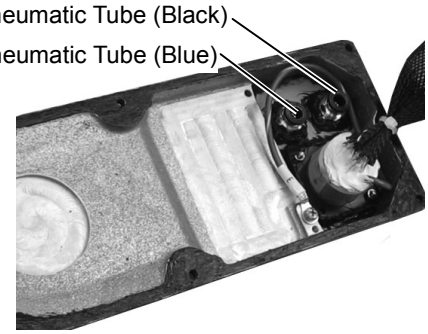

(5) Apply liquid gasket to those surfaces of the J5 cover and the Manipulator that make contact with each other.

NOTE

Wipe off any excess liquid gasket from other parts of the Manipulator with a wiping cloth treated with alcohol.

(6) Secure the J5 cover with the bolts.

5-M4×12 hexagon socket head cap bolts with plain washers

NOTE

Make sure that the cable does not get caught between the J5 cover and the Manipulator.

3.9 J6 Cover

You must remove the J6 cover in order to perform maintenance work or replacement on/of the items listed below.

J5 motor	J5 reduction gear unit	J6 oil seal	J6 timing belt
J6 motor	J6 reduction gear unit	J6 bearing	Cables

Maintenance Parts and Tools

	Name	Quantity	Note
Maintenance Parts	Liquid gasket (1206C)	Proper quantity	R13B031201
Tools	Hexagonal wrench (width across flats: 3 mm)	1	
	Flat blade screwdriver	1	
	Scraper	1	
	Alcohol	Proper quantity	
	Wiping cloth	1	For wiping liquid gasket

Removal

(1) Remove the bolts from the J6 cover.
5-M4×12 hexagon socket head cap bolts with plain washers

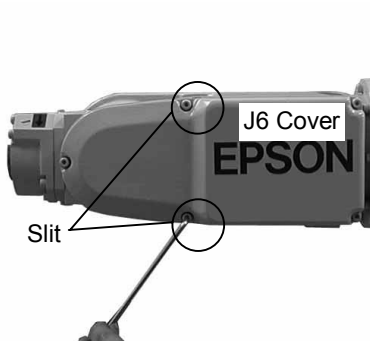

(2) Insert a flat blade screwdriver or similar tool into the slit and remove the J6 cover.

(3) Remove caked-on liquid gasket residue with a scraper or similar tool.

Installation

(1) Apply liquid gasket to those surfaces of the J6 cover and the Manipulator that make contact with each other.

NOTE
Wipe off any excess liquid gasket from other parts of the Manipulator with a wiping cloth treated with alcohol.

(2) Secure the J6 cover into place with the bolts.
5-M4×12 hexagon socket head cap bolts with plain washers

NOTE
Make sure that the cable does not get caught between the J6 cover and the Manipulator.

4. Arm #J1

4.1 Replacing the Motor

WARNING	■ Before performing any replacement procedure, turn OFF the Controller and related equipment, and then pull out the power plug from the power source. Performing any replacement procedure with the power ON is extremely hazardous and may result in electric shock and/or malfunction of the robot system. ■ Do not insert or pull out the motor connectors while the power to the robot system is turned ON. Inserting or pulling out the motor connectors with the power ON is extremely hazardous and may result in serious bodily injury as the Manipulator may move abnormally, and also may result in electric shock and/or malfunction of the robot system. ■ Be sure to connect the AC power cable to a power receptacle. DO NOT connect it directly to a factory power source. To shut off power to the robot system, pull out the power plug from the power source. Performing any work while connecting the AC power cable to a factory power source is extremely hazardous and may result in electric shock and/or malfunction of the robot system.

CAUTION	■ Be careful not to apply excessive shock to the motor shaft during replacement procedures. The shock may shorten the life cycle of the motors and encoder and/or damage them. ■ Never disassemble the motor and encoder. Disassembled motor and encoder will cause a positional gap and cannot be used again. ■ Carefully use alcohol, liquid gasket, and adhesive following respective instructions and also instructions below. Careless use of alcohol, liquid gasket, or adhesive may cause a fire and/or safety problems. - Never put alcohol, liquid gasket, or adhesive close to fire. - Use alcohol, liquid gasket, or adhesive while ventilating the room. - Wear protective gear including a mask, protective goggles, and oil-resistant gloves. - If alcohol, liquid gasket, or adhesive gets on your skin, wash the area thoroughly with soap and water. - If alcohol, liquid gasket, or adhesive gets into your eyes or mouth, flush your eyes or wash out your mouth with clean water thoroughly, and then see a doctor immediately.

CAUTION	■ Wear protective gear including a mask, protective goggles, and oil-resistant gloves during grease up. If grease gets into your eyes, mouth, or on your skin, follow the instructions below. If grease gets into your eyes : Flush them thoroughly with clean water, and then see a doctor immediately. If grease gets into your mouth : If swallowed, do not induce vomiting. See a doctor immediately. If grease just gets into your mouth, wash out your mouth with water thoroughly. If grease gets on your skin : Wash the area thoroughly with soap and water.

NOTE

- After parts have been replaced (motors, reduction gear units, timing belts, etc.), the Manipulator cannot perform positioning properly because a mismatch exists between the origin stored in each motor encoder and its corresponding origin stored in the Controller. After replacing the parts, it is necessary to match these origins.
  The process of aligning the two origins is called "Calibration".
  Refer to *Maintenance 13. Calibration* and follow the steps that pertain to the software you are using to perform the calibration.

4.1.1 Type of Motor

The motor type used in Arm #J1 is shown in the table below.
When ordering a motor for replacement, verify the arm number. Then, specify the code from the table below.

Item	Arm #	Code	Note
AC servo motor 200W with brake	J1	R13B000602	200W

4.1.2 Location of Motor

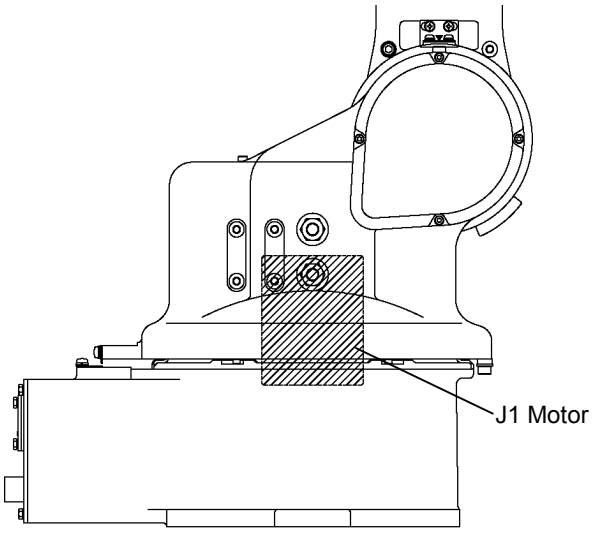

4.1.3 How to Replace the Motor

Maintenannce Part, Tools, and Material

	Name	Quantity	Note
Maintenance Parts	AC servo motor 200W with brake	1	R13B000602
	Grease for reduction gear (4BNo2)	Proper quantity	R13B030302
	Liquid gasket (1206C)	Proper quantity	R13B031201
	Adhesive (Loctite 242)	Proper quantity	R13B031701
Tools	Hexagonal wrench	1 set	
	Nippers	1	
	Needle-nose pliers	1	
	Cloth	1	For protecting J1 input gear-tooth side
	Scraper	1	
	Alcohol	Proper quantity	
	Wiping cloth	3	For wiping liquid gasket For wiping J1 input gear For wiping adhesive
	Torque wrench	1	
Material	Wire tie	4	

Removal

(1) Remove the J1 cover.

Refer to the *Maintenance 3.2 J1 Cover* for details.

(2) Cut the four wire ties that bind two connector packs (power system, signal system).

NOTE

- Cables are divided by system (power, signal) instead of by joint. Do not unplug the J2 (L) connectors by mistake. The arm position data will be lost and the arm will need to be calibrated again if the J2 (L) connectors are unplugged.

(3) Move the two connector packs away from the connectors.

(4) Unplug the J1 (S) connectors for the power cable and the signal cable. Remove the two connector packs.

(5) Remove the bolts that fasten the base of the upper cable clamp by sliding them away from the outside of Arm #J1.

2-M4×16 hexagon socket head cap bolts with plain washers

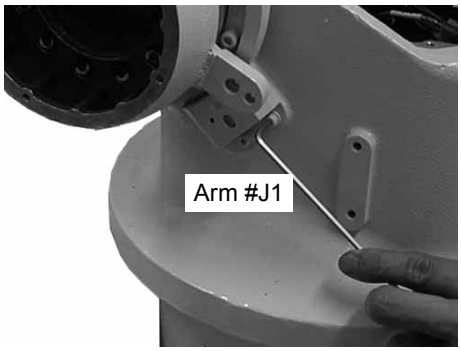

(6) Remove the bolts from the motor. Slide the motor out.
4-M6×20 hexagon socket head cap bolts with plain washers

(7) Remove the bolt and then remove the J1 input gear from the motor.
1-M4×50 hexagon socket head cap bolt with disc spring washer

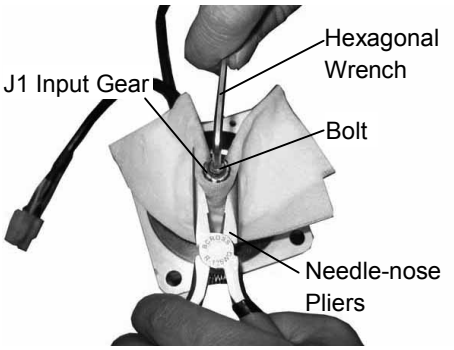

NOTE
- Hold the J1 input gear with needle-nose pliers while removing the bolt to prevent the J1 input gear from turning. When using needle-nose pliers, wrap a cloth around the J1 input gear to prevent damage to its teeth.

(8) Remove caked-on liquid gasket residue with a scraper or similar tool.

Installation

NOTE
- Double-check the bolts to make sure that you have not forgotten to tighten any of them.

(1) Apply liquid gasket to those areas where the motor makes contact with the J1 input gear.

NOTE
- Wipe off any excess liquid gasket from other parts of the Manipulator with a wiping cloth treated with alcohol.

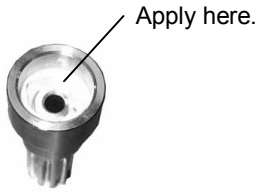

J1 Input Gear

(2) Wipe off the side of the J1 input gear nearest the motor.

NOTE
- The side of the J1 input gear nearest the motor will make contact with the seal lip.

(3) Apply grease (4BNo2) to the motor shaft.

(4) Apply adhesive (Loctite 242) to the bolt and attach the J1 input gear to the motor using the bolt.
1-M4×50 hexagon socket head cap bolt with disc spring washer
Tightening torque 490 N·cm (50 kgf·cm)

NOTE
- Hold the J1 input gear with needle-nose pliers while tightening the bolt to prevent the J1 input gear from turning. When using needle-nose pliers, wrap a cloth around the J1 input gear to prevent damage to its teeth.

- Wipe excess adhesive from other parts of the motor with a wiping cloth treated with alcohol.

(5) Point the cable side of the motor so that it faces away from the connector plate. Insert the motor into the Manipulator. Fasten the motor with the bolts.
4-M6×20 hexagon socket head cap bolts with plain washers
Tightening torque 980 N·cm (100 kgf·cm)

(6) Fasten the base of the upper cable clamp with the bolts from the outside of Arm #J1.
2-M4×16 hexagon socket head cap bolts with plain washers

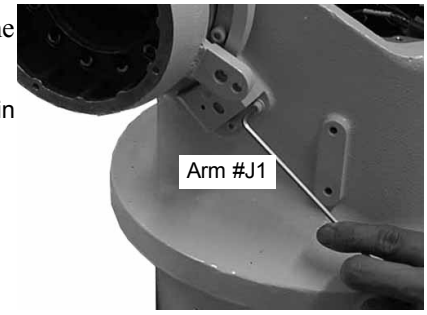

(7) Attach two connector packs (power system, signal system) to the cables and plug them into the J1 (S) power cable and signal cable connectors.

(8) Cover the connectors with two connector packs.

(9) Bind the two connector packs with four wire ties.

(10) Attach the J1 cover.
Refer to the *Maintenance 3.2 J1 Cover* for details on how to attach the J1 cover.

4.2 Replacing the Reduction Gear Unit

WARNING	■ Before performing any replacement procedure, turn OFF the Controller and related equipment, and then pull out the power plug from the power source. Performing any replacement procedure with the power ON is extremely hazardous and may result in electric shock and/or malfunction of the robot system. ■ Do not insert or pull out the motor connectors while the power to the robot system is turned ON. Inserting or pulling out the motor connectors with the power ON is extremely hazardous and may result in serious bodily injury as the Manipulator may move abnormally, and also may result in electric shock and/or malfunction of the robot system. ■ Be sure to connect the AC power cable to a power receptacle. DO NOT connect it directly to a factory power source. To shut off power to the robot system, pull out the power plug from the power source. Performing any work while connecting the AC power cable to a factory power source is extremely hazardous and may result in electric shock and/or malfunction of the robot system.

CAUTION	■ Be careful not to apply excessive shock to the motor shaft during replacement procedures. The shock may shorten the life cycle of the motors and encoder and/or damage them. ■ Carefully use alcohol, liquid gasket, and adhesive following respective instructions and also instructions below. Careless use of alcohol, liquid gasket, or adhesive may cause a fire and/or safety problems. - Never put alcohol, liquid gasket, or adhesive close to fire. - Use alcohol, liquid gasket, or adhesive while ventilating the room. - Wear protective gear including a mask, protective goggles, and oil-resistant gloves. - If alcohol, liquid gasket, or adhesive gets on your skin, wash the area thoroughly with soap and water. - If alcohol, liquid gasket, or adhesive gets into your eyes or mouth, flush your eyes or wash out your mouth with clean water thoroughly, and then see a doctor immediately. ■ Wear protective gear including a mask, protective goggles, and oil-resistant gloves during grease up. If grease gets into your eyes, mouth, or on your skin, follow the instructions below. If grease gets into your eyes : Flush them thoroughly with clean water, and then see a doctor immediately. If grease gets into your mouth : If swallowed, do not induce vomiting. See a doctor immediately. If grease just gets into your mouth, wash out your mouth with water thoroughly. If grease gets on your skin : Wash the area thoroughly with soap and water.

NOTE

- After parts have been replaced (motors, reduction gear units, timing belts, etc.), the Manipulator cannot perform positioning properly because a mismatch exists between the origin stored in each motor encoder and its corresponding origin stored in the Controller.
  After replacing the parts, it is necessary to match these origins.
  The process of aligning the two origins is called "Calibration".
  Refer to *Maintenance 13. Calibration* and follow the steps that pertain to the software you are using to perform the calibration.

4.2.1 Type of Reduction Gear Unit

The type of the reduction gear unit used in Arm #J1 is shown in the table below.
When ordering a reduction gear unit for replacement, verify the arm number. Then, specify the code from the table below.

Item	Arm #	Code
J1 reduction gear unit	J1	R13B010002

4.2.2 Location of Reduction Gear Unit

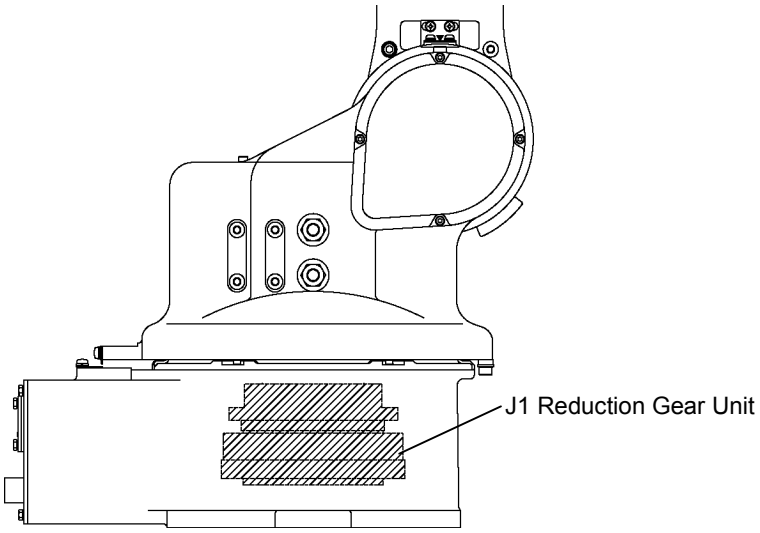

4.2.3 Structure of Reduction Gear Unit

A reduction gear unit consists of the three parts described below. When replacing the reduction gear unit, be sure to always replace the waveform generator, flexspline, and circular spline all together as one set.

(1) Waveform generator

This waveform generator consists of an ellipsoidal cam with ball bearings on its outer circumference.
The inner ring of bearings is secured to the cam, while the outer ring is capable of flexible deformation through the ball bearings.

(2) Flexspline

A thin, elastic, cup-shaped metal body with gear teeth around the outer circumference of the opening.

(3) Circular spline

A rigid, ring-shaped body with gear teeth on the inner circumference.
The circular spline has two more teeth than the flexspline does.

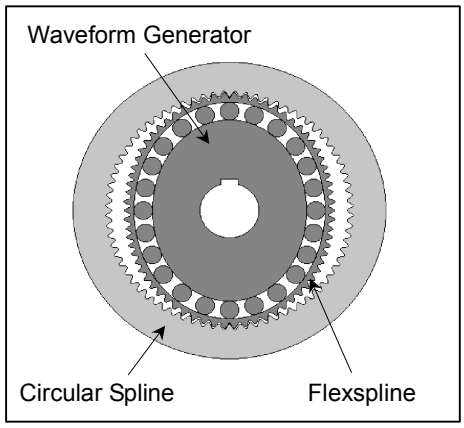

4.2.4 How to Grease the Reduction Gear Unit

CAUTION	■ Wear protective gear including a mask, protective goggles, and oil-resistant gloves during grease up. If grease gets into your eyes, mouth, or on your skin, follow the instructions below. If grease gets into your eyes : Flush them thoroughly with clean water, and then see a doctor immediately. If grease gets into your mouth : If swallowed, do not induce vomiting. See a doctor immediately. If grease just gets into your mouth, wash out your mouth with water thoroughly. If grease gets on your skin : Wash the area thoroughly with soap and water.

When greasing the reduction gear unit, use only the grease specified for the reduction gear unit.
While greasing the reduction gear unit, be careful not to allow any foreign substances in the grease. The adequate quantities of grease are specified as follows:

Location for applying grease on J1 reduction gear unit	Grease quantity	Grease color	Code	Note
Waveform generator	40 g	Cream	R13B030302	4BNo2

Location for applying grease on the waveform generator

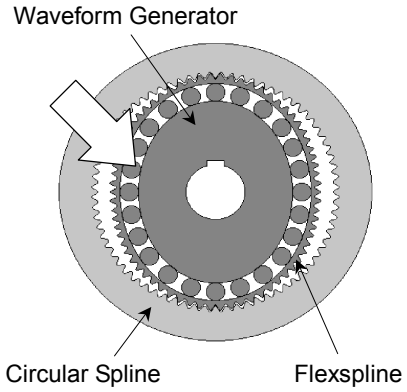

4.2.5 How to Replace the Reduction Gear Unit

CAUTION	■ Use at least three people when removing the upper structure (Arms #J1 to #J6). One should support the upper arm and the others should hold Arm #J1 up. The upper structure is so heavy that attempting this task requires a large force.

NOTE

- Prepare a working table 25 cm long, 50 cm wide, and 20 cm high next to the Manipulator.

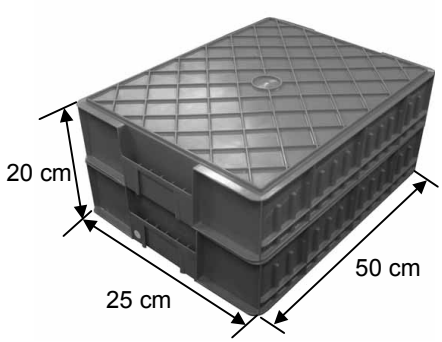

Maintenance Parts, Tools, and Material

	Name	Quantity	Note
Maintenance Parts	J1 reduction gear unit	1	R13B010002
	Grease for reduction gear (4BNo2)	40 g	R13B030302
	Liquid gasket (1206C)	Proper quantity	R13B031201
	Oil seal	1	For replacing oil seal R13B031208
Tools	Working table	1	L:25 × W:50 × H:20 cm
	Hexagonal wrench	1 set	Length: 300 mm
	Nippers	1	
	Cloth	1	For removing tube
	Threaded rod (M5) for tap	2	Length: 150 mm
	Scraper	1	
	Hand press	1	For replacing oil seal
	Alcohol	Proper quantity	
	Wiping cloth	2	For wiping reduction gear For wiping liquid gasket
	Torque wrench	1	
	Threaded rod (M6) for positioning	1	Length: 150 mm
Material	Wire tie	4	

Removal

(1) Remove the J1 motor from the Manipulator following the removal steps (1) to (6) in the *Maintenance 4.1.3 How to Replace the Motor*.

(2) Remove the grease supply tube from the interior of Arm #J1 and the motor plate.

NOTE

- Cover the grease supply tube with a cloth when removing it to prevent grease from dripping inside Arm #J1.

(3) Remove the bolts in the interior of Arm #J1 with hexagonal wrench.

7-M6×30 hexagon socket head cap bolts with plain washers

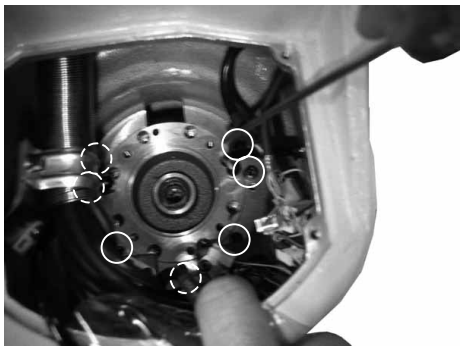

NOTE

- Have one person support Arm #J1 to prevent it from turning while another person removes the bolts.

CAUTION	■ Use at least three people when removing the upper structure (Arms #J1 to #J6). One should support the upper arm and the others should hold Arm #J1 up. The upper structure is so heavy that attempting this task requires a large force.

(4) Remove the upper structure (Arms #J1 to #J6) and place it on the working table so that Arm #J2 is on the bottom.

NOTE

- To connect the upper structure and the lower structure, internal cable is used. Be careful not to lift the upper structure too high.

(5) Remove the bolts and then lift the motor plate up and off.

8-M5×16 hexagon socket head cap bolts with plain washers

(6) Remove the bolts and then lift the reduction gear unit up and off.

12-M5×45 hexagon socket head cap bolts with disc spring washers

Tap 2-M5

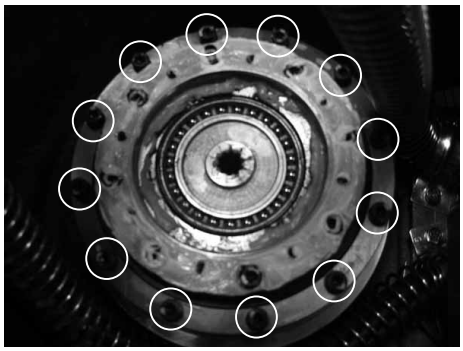

(7) Remove caked-on liquid gasket residue with a scraper or similar tool.

(8) Check the oil seal on the motor plate. If the oil seal shows signs of deterioration (if it is no longer effective), refer to the following procedure for details on how to replace it.

Oil Seal Replacement Procedure

(1) Remove the oil seal with a hand press or similar tool to dislodge it, from the side opposite the oil reservoir.

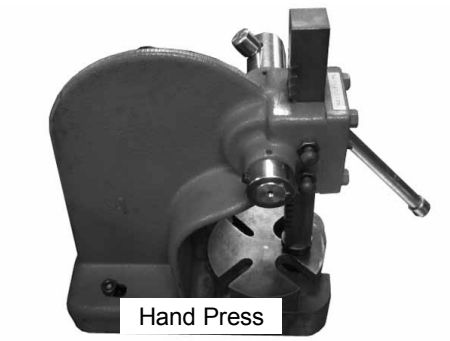

(2) Apply grease (4BNo2) to the contact zone of the motor shaft and a new oil seal.

(3) Attach the oil seal from the reduction gear unit side to ensure that the oil reservoir is located at reduction gear unit side.

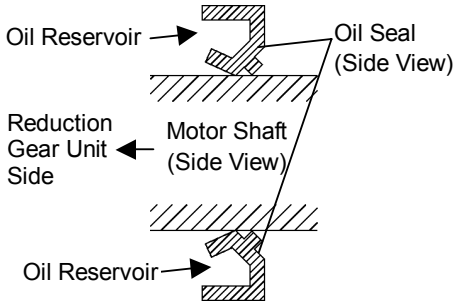

Installation

NOTE

- Double-check the bolts to make sure that you have not forgotten to tighten any of them.

(1) With a wiping cloth treated with alcohol, wipe the surfaces of the reduction gear unit and Manipulator that make contact with each other.

(2) Apply grease (4BNo2) to the waveform generator until the ball bearings of the waveform generator are covered. Refer to the *Maintenance 4.2.4 How to Grease the Reduction Gear Unit* for details.

(3) Apply liquid gasket to contact surfaces of the J1 base and the J1 reduction gear unit

NOTE

- Wipe off any excess liquid gasket from other parts of the Manipulator with a wiping cloth treated with alcohol.

(4) Fasten the reduction gear unit to the Manipulator with the bolts.
12-M5×45 hexagon socket head cap bolts with disc spring washers
Tightening torque 980 N·cm (100 kgf·cm)

(5) Apply liquid gasket to the top of the circular spline.

NOTE
- Wipe off any liquid gasket that has dripped inside the reduction gear unit to ensure that it does not mix with the grease.

(6) Point the flat side of the motor plate so that it faces away from the connector plate. Insert the motor into the Manipulator. Fasten the motor cable with the bolts.

8-M5×16 hexagon socket head cap bolts with plain washers

Tightening torque 600 N·cm (60 kgf·cm)

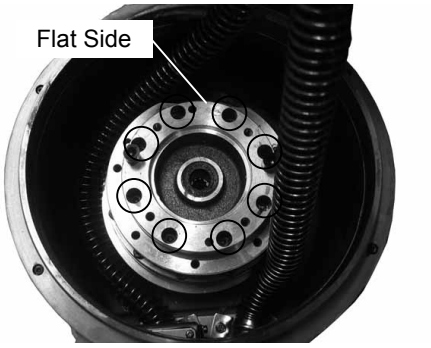

(7) Insert the upper structure into the Manipulator.

NOTE
- As necessary, insert a 150 mm threaded rod (M6) through the screw hole for positioning.
- Bend the J1 base cable through the cable storage section and insert the upper structure so that Arm #J1 will be able to rotate smoothly.

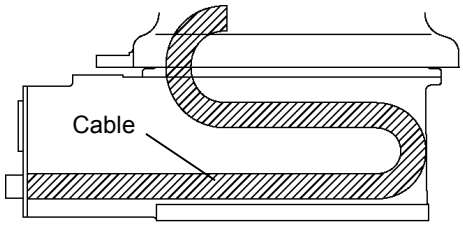

(8) Fasten the upper structure into place with the bolts.

7-M6×30 hexagon socket head cap bolts with plain washers

Tightening torque 980 N·cm (100 kgf·cm)

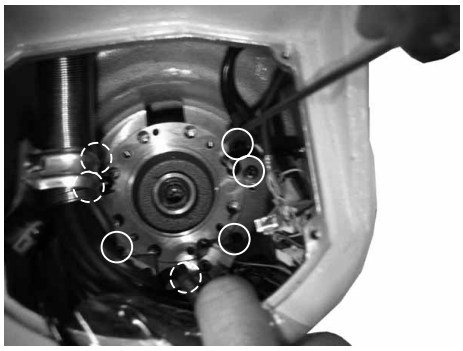

(9) Attach the J1 motor and the J1 cover following the installation steps (5) to (10) in the *Maintenance 4.1.3 How to Replace the Motor*.

5. Arm #J2

5.1 Replacing the Motor

WARNING	■ Before performing any replacement procedure, turn OFF the Controller and related equipment, and then pull out the power plug from the power source. Performing any replacement procedure with the power ON is extremely hazardous and may result in electric shock and/or malfunction of the robot system. ■ Do not insert or pull out the motor connectors while the power to the robot system is turned ON. Inserting or pulling out the motor connectors with the power ON is extremely hazardous and may result in serious bodily injury as the Manipulator may move abnormally, and also may result in electric shock and/or malfunction of the robot system. ■ Be sure to connect the AC power cable to a power receptacle. DO NOT connect it directly to a factory power source. To shut off power to the robot system, pull out the power plug from the power source. Performing any work while connecting the AC power cable to a factory power source is extremely hazardous and may result in electric shock and/or malfunction of the robot system.

CAUTION	■ Be careful not to apply excessive shock to the motor shaft during replacement procedures. The shock may shorten the life cycle of the motors and encoder and/or damage them. ■ Never disassemble the motor and encoder. Disassembled motor and encoder will cause a positional gap and cannot be used again. ■ Carefully use alcohol, liquid gasket, and adhesive following respective instructions and also instructions below. Careless use of alcohol, liquid gasket, or adhesive may cause a fire and/or safety problems. - Never put alcohol, liquid gasket, or adhesive close to fire. - Use alcohol, liquid gasket, or adhesive while ventilating the room. - Wear protective gear including a mask, protective goggles, and oil-resistant gloves. - If alcohol, liquid gasket, or adhesive gets on your skin, wash the area thoroughly with soap and water. - If alcohol, liquid gasket, or adhesive gets into your eyes or mouth, flush your eyes or wash out your mouth with clean water thoroughly, and then see a doctor immediately.

CAUTION	■ Wear protective gear including a mask, protective goggles, and oil-resistant gloves during grease up. If grease gets into your eyes, mouth, or on your skin, follow the instructions below. If grease gets into your eyes : Flush them thoroughly with clean water, and then see a doctor immediately. If grease gets into your mouth : If swallowed, do not induce vomiting. See a doctor immediately. If grease just gets into your mouth, wash out your mouth with water thoroughly. If grease gets on your skin : Wash the area thoroughly with soap and water.

NOTE

- After parts have been replaced (motors, reduction gear units, timing belts, etc.), the Manipulator cannot perform positioning properly because a mismatch exists between the origin stored in each motor encoder and its corresponding origin stored in the Controller. After replacing the parts, it is necessary to match these origins.
  The process of aligning the two origins is called “Calibration”.
  Refer to *Maintenance 13. Calibration* and follow the steps that pertain to the software you are using to perform the calibration.

5.1.1 Type of Motor

The motor type used in Arm #J2 is shown in the table below.
When ordering a motor for replacement, verify the arm number. Then, specify the code from the table below.

Item	Arm #	Code	Note
AC servo motor 200W with brake	J2	R13B000602	200W

5.1.2 Location of Motor

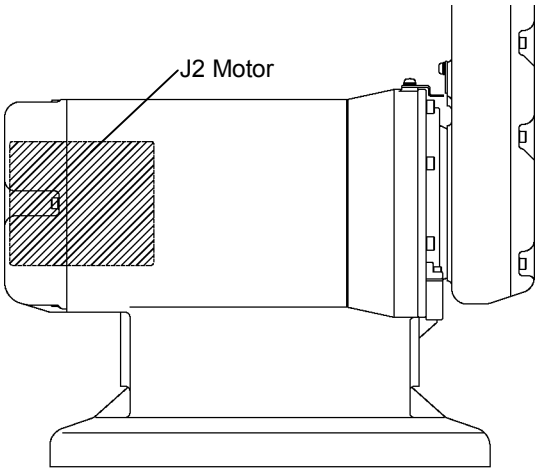

5.1.3 How to Replace the Motor

WARNING	■ Always use at least two people when removing the motor unit. Remove the motor unit while one person is supporting the upper structure (Arms #J2 to #J6). The upper structure folds inward at Joint #2 as soon as the motor unit is removed and the brake is released. Failure to properly support the upper structure may result in serious bodily injury and/or severe equipment damage.

Maintenance Parts, Tools, and Material

	Name	Quantity	Note
Maintenance Parts	AC servo motor 200W with brake	1	R13B000602
	Grease for reduction gear (4BNo2)	6 g	R13B030302
	Liquid gasket (1206C)	Proper quantity	R13B031201
	Oil seal	1	For replacing oil seal R13B031209
	Adhesive (Loctite 242)	Proper quantity	R13B031701
	O-ring S110	1	For replacing O-ring R13B031207
Tools	Hexagonal wrench	1 set	
	Nippers	1	
	Threaded rod (M5) for tap	2	Length: 100 mm
	Needle-nose pliers	1	
	Scraper	1	
	Sharpening stone	1	
	Hand press	1	For replacing oil seal
	Torque wrench	1	
	Alcohol	Proper quantity	
	Wiping cloth	2	For wiping liquid gasket For wiping adhesive
	Threaded rod (M6) for positioning	1	Length: 150 mm
Material	Wire tie	4	

NOTE

- We recommend folding the upper structure (Arms #J2 to #J6) toward the stop side before starting the replacement.

Removal

(1) Remove the J1 cover.

Refer to the *Maintenance 3.2 J1 Cover* for details on removing the J1 cover.

(2) Remove the J2 cover.

Refer to the *Maintenance 3.3 J2 Cover* for details on removing the J2 cover.

(3) Cut four wire ties that bind two connector packs (power system, signal system).

NOTE
- Cables are divided by system (power, signal) instead of by joint. Do not unplug the J1 (S) connectors by mistake. The arm position data will be lost and the arm will need to be calibrated again if the J1 (S) connectors are unplugged.

(4) Move the two connector packs away from the connectors.

(5) Unplug the J2 (L) connectors for the power cable and the signal cable. Remove the two connector packs.

(6) Pass the J2 motor connector from the J1 motor side through the interior of the Manipulator to the J2 motor side.

(7) Have another person support the upper structure (Arms #J2 to #J6).

WARNING	■ Always use at least two people when removing the motor unit. Remove the motor unit while one person is supporting the upper structure (Arms #J2 to #J6). The upper structure folds inward at Joint #2 as soon as the motor unit is removed and the brake is released. Failure to properly support the upper structure may result in serious bodily injury and/or severe equipment damage.

(8) Remove the bolts from the motor plate. Grasp the motor unit and remove it from the Manipulator.

4-M6×16 hexagon socket head cap bolts with disc spring washers

2-M5 taps

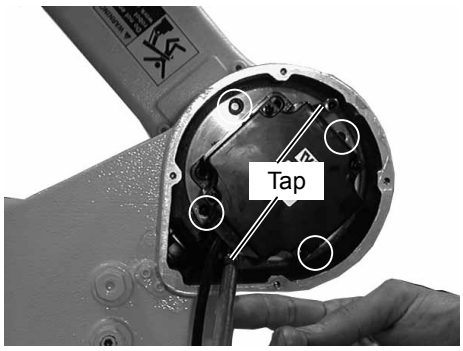

NOTE
- Use a threaded rod approximately 100 mm in length for these taps.

(9) Remove the bolt with hexagonal wrench and then remove the waveform generator from the motor unit.

1-M4×25 hexagon socket head cap bolt with disc spring washer

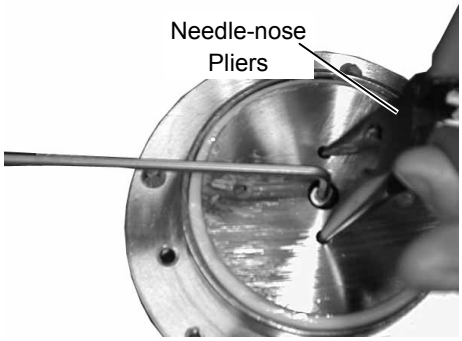

NOTE
- Hold the waveform generator with needle-nose pliers while removing the bolt to prevent the waveform generator from turning.

(10) Remove the seal shaft from the motor shaft.

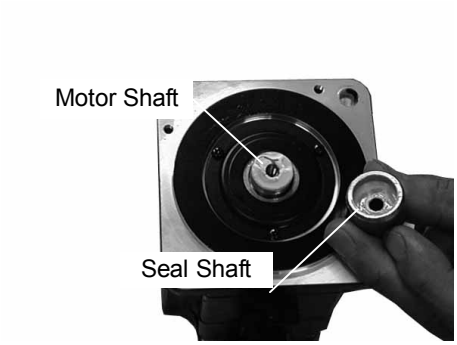

(11) Put a tram mark between the motor and the motor plate.

(12) Remove the bolts and then remove the motor from the motor plate.
4-M6×16 hexagon socket head cap bolts with disc spring washers

NOTE

- Be careful not to lose the O- ring on the motor plate.

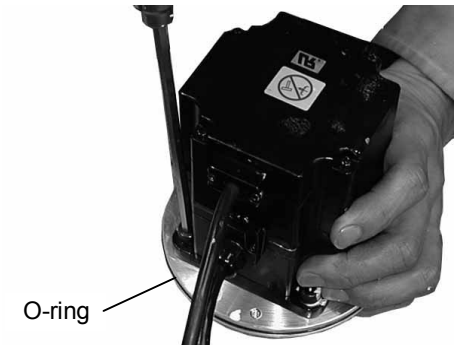

(13) Remove caked-on liquid gasket residue with a scraper or similar tool.

(14) Repair scratches incurred during tap use with a sharpening stone or similar tool.

(15) Check the oil seal on the motor plate. If the oil seal shows signs of deterioration (if it is no longer effective), refer to the following procedure for details on how to replace it.

Oil Seal Replacement Procedure

(1) Remove the oil seal with a hand press or similar tool to dislodge it, from the side opposite the oil reservoir.

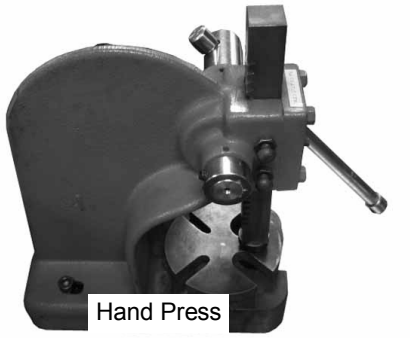

(2) Apply grease (4BNo2) to the contact zone between the motor shaft and a new oil seal.

(3) Attach the oil seal from the reduction gear unit side to ensure that the oil reservoir is located at reduction gear unit side.

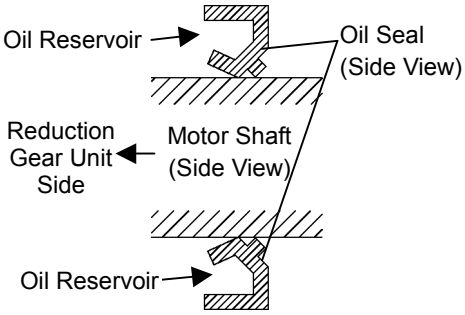

Installation

NOTE

- Double-check the bolts to make sure that you have not forgotten to tighten any of them.

(1) Apply liquid gasket to the bolts and fasten the motor plate to the motor with the bolts.
4-M6×16 hexagon socket head cap bolts with disc spring washers
Tightening torque 980 N·cm (100 kgf·cm)

NOTE

- Position the motor properly using the tram mark from the old motor.
- Wipe off any excess liquid gasket on other parts with a wiping cloth treated with alcohol.

(2) Apply liquid gasket to the bottom of the waveform generator seal shaft. (The bottom of the seal shaft is the surface where the seal shaft connects to the motor shaft.) Attach the seal shaft to the motor shaft.

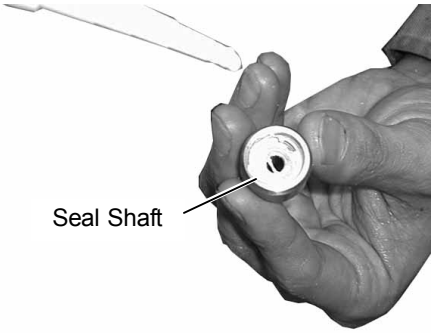

NOTE

- Wipe off any excess liquid gasket from other parts of the Manipulator with a wiping cloth treated with alcohol.

(3) Apply adhesive to the hexagon socket head cap bolt and secure the waveform generator to the motor unit together with the seal shaft with the bolt.
1-M4×25 hexagon socket head cap bolt with disc spring washer
Tightening torque 490 N·cm (50 kgf·cm)

NOTE
- Hold the waveform generator with needle-nose pliers while tightening the bolt to prevent the waveform generator from turning.
- Wipe excess adhesive from other parts of the motor unit with a wiping cloth treated with alcohol.

(4) Apply grease (4BNo2) to the waveform generator.

(5) Point the cable side of the motor down and to the left. Insert the motor into the Manipulator passing the connector through to the J1 side. Apply liquid gasket to the bolts and fasten the motor unit into place with the bolts.
4-M6×16 hexagon socket head cap bolts with disc spring washers
Tightening torque 980 N·cm (100 kgf·cm)

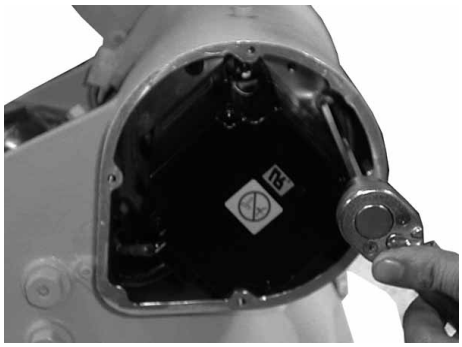

NOTE
- As necessary, insert a 150 mm threaded rod (M6) through the screw hole in the motor for positioning.
- Wipe off any excess liquid gasket with a wiping cloth treated with alcohol.

Check the following with relation to the O-ring:
(Replace with a new O-ring if lost or damaged.)

- Is the O-ring securely installed on the motor plate?
- Is there any damage and/or residue caked onto the O-ring (causing oil leakage)?
- Does the O-ring seat properly when the motor is inserted?

(6) Attach two connector packs (power system, signal system) to the cables and plug them into the J2 (L) power cable and signal cable connectors.

(7) Cover the connectors with two connector packs.

(8) Bind the two connector packs with four wire ties.

(9) Attach the J2 cover.

Refer to the *Maintenance 3.3 J2 Cover* for details on how to attach the J2 cover.

(10) Attach the J1 cover.

Refer to the *Maintenance 3.2 J1 Cover* for details on how to attach the J1 cover.

5.2 Replacing the Reduction Gear Unit

WARNING	■ Before performing any replacement procedure, turn OFF the Controller and related equipment, and then pull out the power plug from the power source. Performing any replacement procedure with the power ON is extremely hazardous and may result in electric shock and/or malfunction of the robot system. ■ Do not insert or pull out the motor connectors while the power to the robot system is turned ON. Inserting or pulling out the motor connectors with the power ON is extremely hazardous and may result in serious bodily injury as the Manipulator may move abnormally, and also may result in electric shock and/or malfunction of the robot system. ■ Be sure to connect the AC power cable to a power receptacle. DO NOT connect it directly to a factory power source. To shut off power to the robot system, pull out the power plug from the power source. Performing any work while connecting the AC power cable to a factory power source is extremely hazardous and may result in electric shock and/or malfunction of the robot system.

CAUTION	■ Be careful not to apply excessive shock to the motor shaft during replacement procedures. The shock may shorten the life cycle of the motors and encoder and/or damage them. ■ Carefully use alcohol, liquid gasket, and adhesive following respective instructions and also instructions below. Careless use of alcohol, liquid gasket, or adhesive may cause a fire and/or safety problems. - Never put alcohol, liquid gasket, or adhesive close to fire. - Use alcohol, liquid gasket, or adhesive while ventilating the room. - Wear protective gear including a mask, protective goggles, and oil-resistant gloves. - If alcohol, liquid gasket, or adhesive gets on your skin, wash the area thoroughly with soap and water. - If alcohol, liquid gasket, or adhesive gets into your eyes or mouth, flush your eyes or wash out your mouth with clean water thoroughly, and then see a doctor immediately. ■ Wear protective gear including a mask, protective goggles, and oil-resistant gloves during grease up. If grease gets into your eyes, mouth, or on your skin, follow the instructions below. If grease gets into your eyes : Flush them thoroughly with clean water, and then see a doctor immediately. If grease gets into your mouth : If swallowed, do not induce vomiting. See a doctor immediately. If grease just gets into your mouth, wash out your mouth with water thoroughly. If grease gets on your skin : Wash the area thoroughly with soap and water.

NOTE

- After parts have been replaced (motors, reduction gear units, timing belts, etc.), the Manipulator cannot perform positioning properly because a mismatch exists between the origin stored in each motor encoder and its corresponding origin stored in the Controller.
  After replacing the parts, it is necessary to match these origins.
  The process of aligning the two origins is called “Calibration”.
  Refer to *Maintenance 13. Calibration* and follow the steps that pertain to the software you are using to perform the calibration.

5.2.1 Type of Reduction Gear Unit

The type of the reduction gear unit used in Arm #J2 is shown in the table below.
When ordering a reduction gear unit for replacement, verify the arm number. Then, specify the code from the table below.

Item	Arm #	Code
J2 reduction gear unit	J2	R13B010003

5.2.2 Location of Reduction Gear Unit

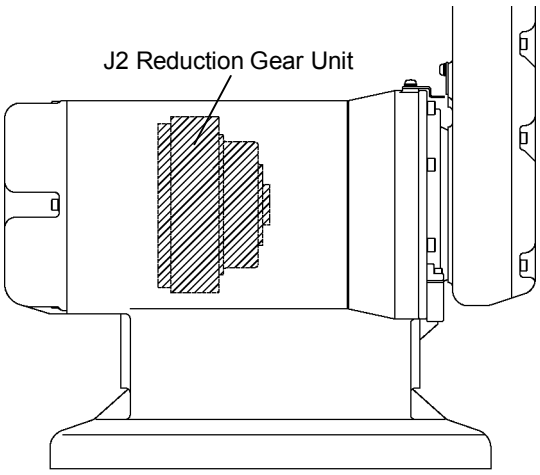

5.2.3 Structure of Reduction Gear Unit

A reduction gear unit consists of the waveform generator, flexspline, and circular spline. When replacing the reduction gear unit, be sure to always replace these parts all together as one set.

Refer to the *Maintenance 4.2.3 Structure of Reduction Gear Unit (Arm #J1)* for details.

5.2.4 How to Grease the Reduction Gear Unit

CAUTION	■ Wear protective gear including a mask, protective goggles, and oil-resistant gloves during grease up. If grease gets into your eyes, mouth, or on your skin, follow the instructions below. If grease gets into your eyes : Flush them thoroughly with clean water, and then see a doctor immediately. If grease gets into your mouth : If swallowed, do not induce vomiting. See a doctor immediately. If grease just gets into your mouth, wash out your mouth with water thoroughly. If grease gets on your skin : Wash the area thoroughly with soap and water.

When greasing the reduction gear unit, use only the grease specified for the reduction gear unit.

While greasing the reduction gear unit, be careful not to allow any foreign substances in the grease. The adequate quantities of grease are specified as follows:

Location for applying grease on J2 reduction gear unit	Grease quantity	Grease color	Code	Note
Teeth of the flexspline and the circular spline Waveform generator	60 g	Cream	R13B030302	4BNo2
Between the waveform generator and the motor plate	6 g			

Location for applying grease on the teeth of flexspline and circular spline and the waveform generator

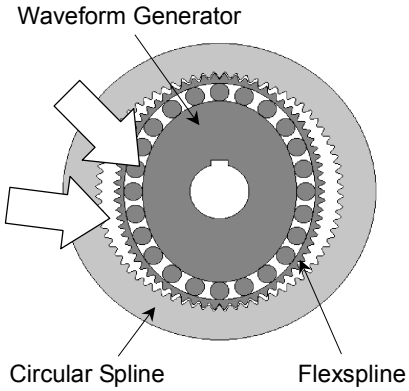

Location for applying grease between the waveform generator and the motor plate

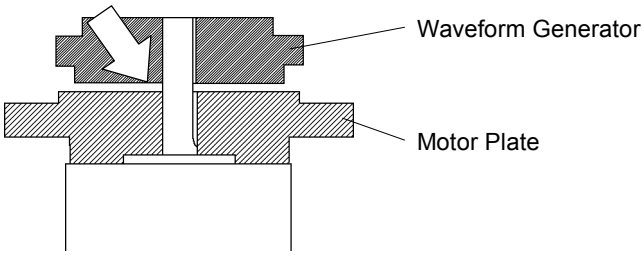

5.2.5 How to Replace the Reduction Gear Unit

WARNING	■ Always use at least two people when removing the motor unit. Remove the motor unit while one person is supporting the upper structure (Arms #J2 to #J6). The upper structure folds inward at Joint #2 as soon as the motor unit is removed and the brake is released. Failure to properly support the upper structure may result in serious bodily injury and/or severe equipment damage.

Maintenance Parts, Tools, and Material

	Name	Quantity	Note
Maintenance Parts	J2 reduction gear unit	1	R13B010003
	Grease for reduction gear (4BNo2)	66 g	R13B030302
	Liquid gasket (1206C)	Proper quantity	R13B031201
	Adhesive (Loctite 242)	Proper quantity	R13B031701
	O-ring S110	1	For replacing O-ring R13B031207
Tools	Hexagonal wrench	1 set	
	Nippers	1	
	Threaded rod (M5) for tap	2	Length: 100 mm
	Cloth	1	Lint-free For wiping grease
	Needle-nose pliers	1	
	Scraper	1	
	Sharpening stone	1	
	Torque wrench	1	
	Alcohol	Proper quantity	
	Wiping cloth	2	For wiping adhesive For wiping liquid gasket
	Threaded rod (M5) for positioning	1	Length: 150 mm
	Threaded rod (M6) for positioning	1	Length: 150 mm
Material	Wire tie	4	

Removal

NOTE
- We recommend folding the upper structure (Arms #J2 to #J6) to the stop side before the replacement.

(1) Remove the J2 motor unit from the Manipulator following the removal steps (1) to (8) in the *Maintenance 5.1.3 How to Replace the Motor*.

(2) Remove the bolts from the motor base ring (spacer). Pull the motor base ring off the Manipulator. (The motor base ring and the circular spline are secured with the same bolts.)
12-M5×25 hexagon socket head cap bolts with disc spring washers
2-M5 taps

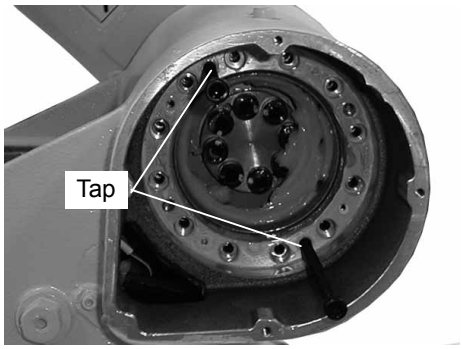

NOTE
- Use a threaded rod approximately 100 mm in length for these taps.

(3) Screw two threaded rods (M5) into the taps on the circular spline. Remove the circular spline from the Manipulator.

(4) Wipe the grease off the flexspline. (Use a lint-free cloth that will not leave any fibers behind.)

(5) Remove the bolts and the flexspline.
8-M8×20 hexagon socket head cap bolts with disc spring washers
2-M5 taps

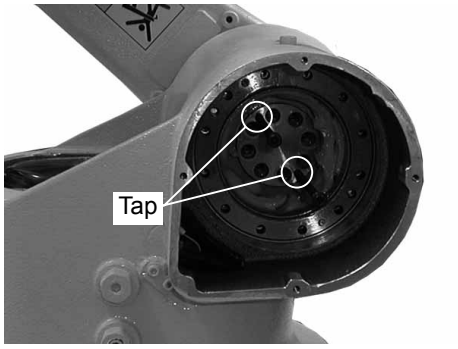

(6) Remove the flexspline cap from the flexspline.

NOTE
- The flexspline cap will be attached to the flexspline of the new reduction gear unit. Do not discard the flexspline cap along with the reduction gear unit.


Flexspline Cap

(7) Remove the bolt with hexagonal wrench and then remove the waveform generator from the motor unit.

1-M4×25 hexagon socket head cap bolt with disc spring washer

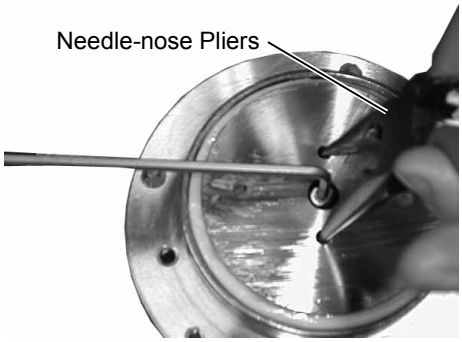

NOTE
- Hold the waveform generator with needle-nose pliers while removing the bolt to prevent the waveform generator from turning.

(8) Remove caked-on liquid gasket residue with a scraper or similar tool.

(9) Repair scratches incurred during tap use with a sharpening stone or similar tool.

Installation

NOTE
- Double-check the bolts to make sure that you have not forgotten to tighten any of them.

(1) Apply grease (4BNo2) to the teeth of the flexspline and circular spline, and the waveform generator until the ball bearings of the waveform generator are covered. Refer to the *Maintenance 5.2.4 How to Grease the Reduction Gear Unit* for details.

(2) Apply adhesive to the bolt and secure the waveform generator to the motor unit together with the seal shaft with the bolt.

1-M4×25 hexagon socket head cap bolt with disc spring washer

Tightening torque 490 N·cm (50 kgf·cm)

NOTE
- Hold the waveform generator with needle-nose pliers while tightening the bolt to prevent the waveform generator from turning.
- Wipe off any excess liquid gasket on other parts with a wiping cloth treated with alcohol.

(3) Apply grease (4BNo2) between the waveform generator and the motor plate. Refer to the *Maintenance 5.2.4 How to Grease the Reduction Gear Unit* for details.

(4) Insert the circular spline into the Manipulator with the inscribed surface on the outside.

NOTE
- As necessary, insert a 150 mm threaded rod (M5) through the screw hole in the circular spline for positioning.

(5) Make sure that the grease channel on the motor base ring is facing up. Insert the motor base ring into the Manipulator.

NOTE
- As necessary, insert a 150 mm threaded rod (M5) through the screw hole in the motor base ring for positioning.

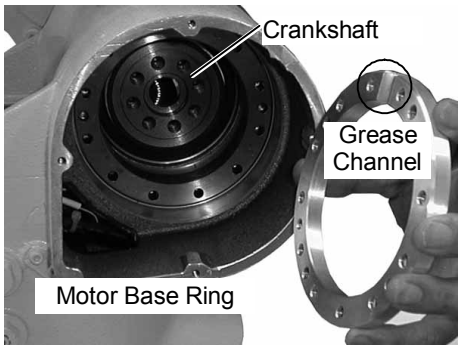

(6) Fasten the motor base ring to the Manipulator with the bolts. (The motor base ring and the circular spline are secured with the same bolts.)
12-M5×25 hexagon socket head cap bolts with disc spring washers
Tightening torque 980 N·cm (100 kgf·cm)

(7) Attach the flexspline cap to the flexspline.

(8) Apply liquid gasket to boss protrusion (side) of the flexspline cap.

NOTE
- Make sure that no liquid gasket gets in the air holes.
- Wipe off any excess liquid gasket on other parts with a wiping cloth treated with alcohol.

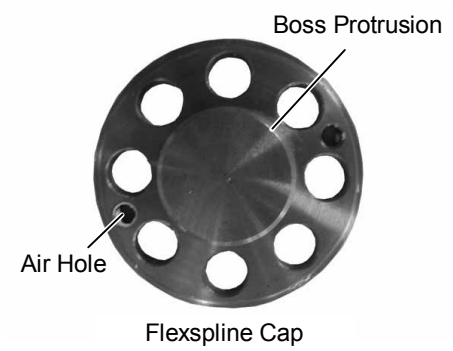

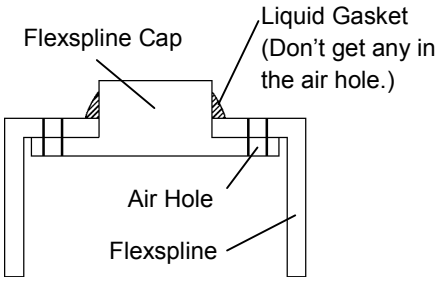

(9) Screw two threaded rods (M5) into the taps. Insert the flexspline parallel to the Manipulator using the viscosity of the liquid gasket.

NOTE
- Line the air holes on the flexspline and the flexspline cap up with the hole of the crankshaft. Insert the flexspline and the flexspline cap.

(10) Apply liquid gasket to the bolts and fasten the flexspline to the Manipulator with the bolts.
8-M8×20 hexagon socket head cap bolts with disc spring washers
Tightening torque 4,000 N·cm (410 kgf·cm)

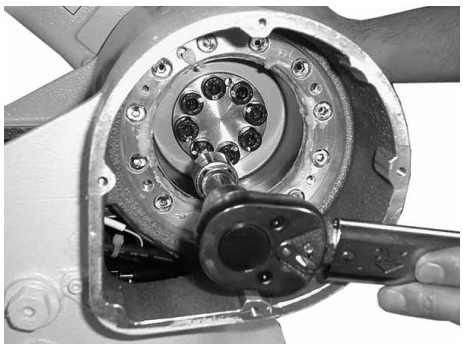

NOTE
- Wipe off any excess liquid gasket on other parts with a wiping cloth treated with alcohol.

(11) Fill the cup of the flexspline halfway with grease (4BNo2).

(12) Attach the J2 motor, the J1 cover, and the J2 cover following the installation steps (4) to (10) in the *Maintenance 5.1.3 How to Replace the Motor*.

6. Arm #J3

6.1 Replacing the Motor

WARNING	■ Before performing any replacement procedure, turn OFF the Controller and related equipment, and then pull out the power plug from the power source. Performing any replacement procedure with the power ON is extremely hazardous and may result in electric shock and/or malfunction of the robot system. ■ Do not insert or pull out the motor connectors while the power to the robot system is turned ON. Inserting or pulling out the motor connectors with the power ON is extremely hazardous and may result in serious bodily injury as the Manipulator may move abnormally, and also may result in electric shock and/or malfunction of the robot system. ■ Be sure to connect the AC power cable to a power receptacle. DO NOT connect it directly to a factory power source. To shut off power to the robot system, pull out the power plug from the power source. Performing any work while connecting the AC power cable to a factory power source is extremely hazardous and may result in electric shock and/or malfunction of the robot system.

CAUTION	■ Be careful not to apply excessive shock to the motor shaft during replacement procedures. The shock may shorten the life cycle of the motors and encoder and/or damage them. ■ Never disassemble the motor and encoder. Disassembled motor and encoder will cause a positional gap and cannot be used again. ■ Carefully use alcohol, liquid gasket, and adhesive following respective instructions and also instructions below. Careless use of alcohol, liquid gasket, or adhesive may cause a fire and/or safety problems. - Never put alcohol, liquid gasket, or adhesive close to fire. - Use alcohol, liquid gasket, or adhesive while ventilating the room. - Wear protective gear including a mask, protective goggles, and oil-resistant gloves. - If alcohol, liquid gasket, or adhesive gets on your skin, wash the area thoroughly with soap and water. - If alcohol, liquid gasket, or adhesive gets into your eyes or mouth, flush your eyes or wash out your mouth with clean water thoroughly, and then see a doctor immediately.

CAUTION	■ Wear protective gear including a mask, protective goggles, and oil-resistant gloves during grease up. If grease gets into your eyes, mouth, or on your skin, follow the instructions below. If grease gets into your eyes : Flush them thoroughly with clean water, and then see a doctor immediately. If grease gets into your mouth : If swallowed, do not induce vomiting. See a doctor immediately. If grease just gets into your mouth, wash out your mouth with water thoroughly. If grease gets on your skin : Wash the area thoroughly with soap and water.

NOTE

- After parts have been replaced (motors, reduction gear units, timing belts, etc.), the Manipulator cannot perform positioning properly because a mismatch exists between the origin stored in each motor encoder and its corresponding origin stored in the Controller. After replacing the parts, it is necessary to match these origins.
  The process of aligning the two origins is called "Calibration".
  Refer to *Maintenance 13. Calibration* and follow the steps that pertain to the software you are using to perform the calibration.

6.1.1 Type of Motor

The motor type used in Arm #J3 is shown in the table below.
When ordering a motor for replacement, verify the arm number. Then, specify the code from the table below.

Item	Arm #	Code	Note
AC servo motor 100W with brake	J3	R13B000603	100W

6.1.2 Location of Motor

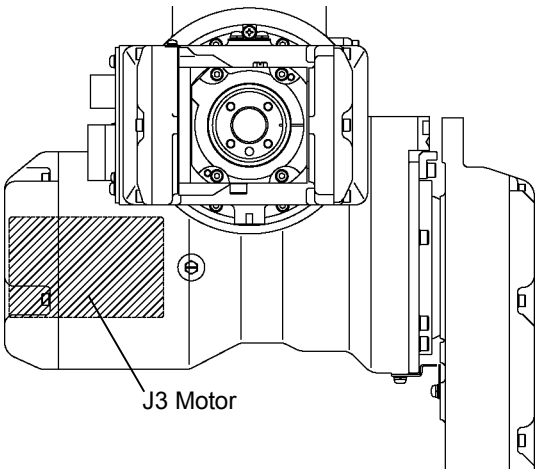

6.1.3 How to Replace the Motor

WARNING	■ Always use at least two people when removing the motor unit. Remove the motor unit while one person is supporting the upper structure (Arms #J3 to #J6). The upper structure folds inward at Joint #3 as soon as the motor unit is removed and the brake is released. Failure to properly support the upper structure may result in serious bodily injury and/or severe equipment damage.

Maintenance Parts, Tools, and Material

	Name	Quantity	Note
Maintenance Parts	AC servo motor 100W with brake	1	R13B000603
	Grease for reduction gear (4BNo2)	5g	R13B030302
	Liquid gasket (1206C)	Proper quantity	R13B031201
	Oil seal	1	For replacing oil seal R13B031208
	Adhesive (Loctite 242)	Proper quantity	R13B031701
	O-ring S90	1	For replacing O-ring R13B031206
Tools	Hexagonal wrench	1 set	
	Flat blade screwdriver	1	
	Scraper	1	
	Sharpening stone	1	
	Nippers	1	
	Threaded rod (M4) for tap	2	
	Needle-nose pliers	1	
	Hand press	1	For replacing oil seal
	Torque wrench	1	
	Alcohol	Proper quantity	
	Wiping cloth	2	For wiping liquid gasket For wiping adhesive
Material	Wire tie	4	

Removal

NOTE

- We recommend folding the upper structure (Arms #J3 to #J6) to the stop side before the replacement.

(1) Remove the J3 cover.

Refer to the *Maintenance 3.4 J3 Cover* for details on removing the J3 cover.

(2) Remove the upper casing cover.

Refer to the *Maintenance 3.6 Upper Casing Cover* for details on removing the upper casing cover.

(3) Remove four wire ties that bind two connector packs (power system, signal system) that are located inside the upper casing.

NOTE

- Cables are divided by system (power, signal) instead of by joint. Do not unplug the J4 (R) connectors by mistake. The arm position data will be lost and the arm needs to be calibrated again if the J4 (R) connectors are unplugged.

(4) Move the two connector packs (power system, signal system) away from the connectors.

(5) Unplug the J3 (U) connectors for the power cable and the signal cable. Remove the two connector packs.

(6) Pass the J3 motor connector from the J4 motor side through the interior of the Manipulator to the J3 motor side.

(7) Have another person support the upper structure (Arms #J3 to #J6).

WARNING	■ Always use at least two people when removing the motor unit. Remove the motor unit while one person is supporting the upper structure (Arms #J3 to #J6). The upper structure folds inward at Joint #3 as soon as the motor unit is removed and the brake is released. Failure to properly support the upper structure may result in serious bodily injury and/or severe equipment damage.

(8) Remove the bolts from the motor plate. Grasp the motor unit and remove it from the Manipulator.

4-M4×16 hexagon socket head cap bolts with plain washers

2-M4 taps

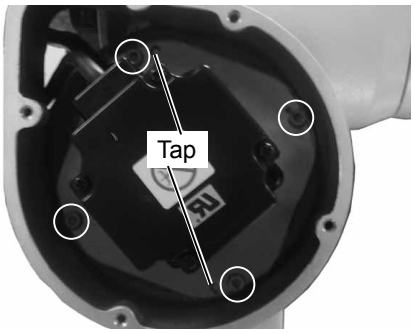

(9) Remove the bolt with hexagonal wrench and then remove the waveform generator from the motor unit.

1-M4×40 hexagon socket head cap bolt with disc spring washer

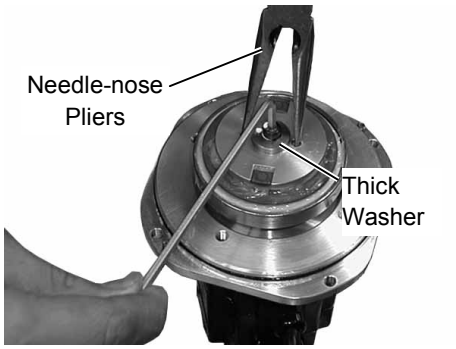

NOTE

- Hold the waveform generator with needle-nose pliers while removing the bolt to prevent the waveform generator from turning.
- Be careful not to lose the thick washer attached to the hexagon socket head cap bolt.

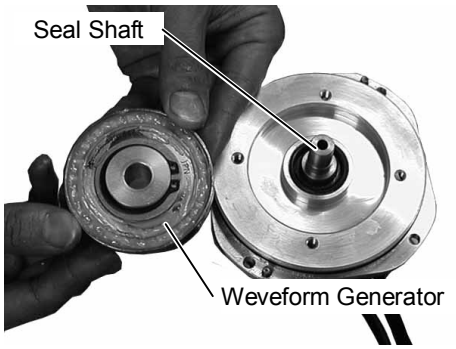

(10) Remove the seal shaft from the motor shaft.

(11) Put a tram mark between the motor and the motor plate.

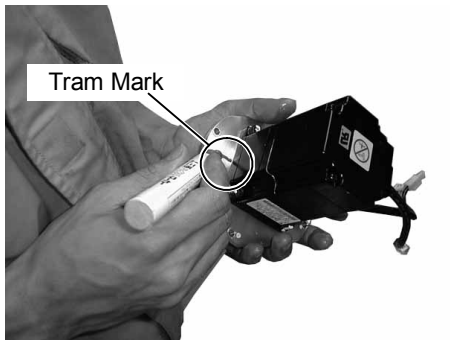

(12) Remove the bolts and then remove the motor from the motor plate.
4-M5×16 hexagon socket head cap bolts with plain washers

NOTE

- Be careful not to lose the O-ring on the motor plate.

(13) Remove caked-on liquid gasket residue with a scraper or similar tool.

(14) Repair scratches incurred during tap use with a sharpening stone or similar tool.

(15) Check the oil seal on the motor plate. If the oil seal shows signs of deterioration (if it is no longer effective), refer to the following procedure for details on how to replace it.

Oil Seal Replacement Procedure

(1) Remove the oil seal with a hand press or similar tool to dislodge it, from the side opposite the oil reservoir.

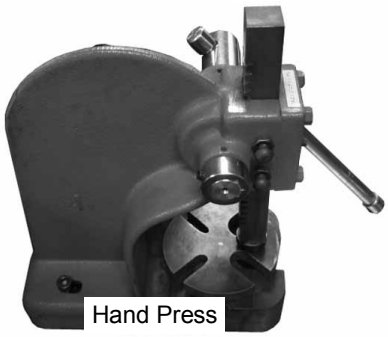

(2) Apply grease (4BNo2) to the contact zone between the motor shaft and a new oil seal.

(3) Attach the oil seal from the reduction gear unit side to ensure that the oil reservoir is located at reduction gear unit side.

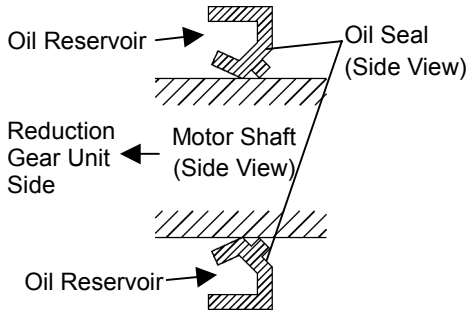

Installation

NOTE

- Double-check the bolts to make sure that you have not forgotten to tighten any of them.

(1) Apply liquid gasket to the bolts and fasten motor plate to the motor with the bolts.
4-M5×16 hexagon socket head cap bolts with plain washers
Tightening torque 600 N·cm (60 kgf·cm)

NOTE

- Position the motor using the tram marks from the old motor.
- Wipe off any excess liquid gasket on other parts with a wiping cloth treated with alcohol.

(2) Apply liquid gasket to the bottom of the waveform generator seal shaft. (The bottom of the seal shaft is the surface where the seal shaft connects to the motor shaft.) Attach the seal shaft to the motor shaft.

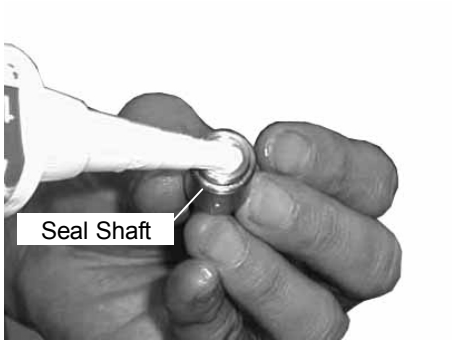

NOTE

- Wipe off any excess liquid gasket from other parts of the Manipulator with a wiping cloth treated with alcohol.

(3) Apply adhesive to the bolt and secure the waveform generator to the motor unit together with the seal shaft with the bolt.
1-M4×40 hexagon socket head cap bolt with disc spring washer
Tightening torque 490 N·cm (50 kgf·cm)

NOTE

- Hold the waveform generator with needle-nose pliers while tightening the bolt to prevent the waveform generator from turning.
- Wipe excess adhesive from other parts of the motor unit with a wiping cloth treated with alcohol.

(4) Apply grease (4BNo2) to the waveform generator.

(5) Point the cable side of the motor up and to the left. Insert the motor into the Manipulator while passing the connector through to the J4 side. Fasten the motor unit with the bolts.

4-M4×16 hexagon socket head cap bolts with plain washers

Tightening torque 280 N·cm (29 kgf·cm)

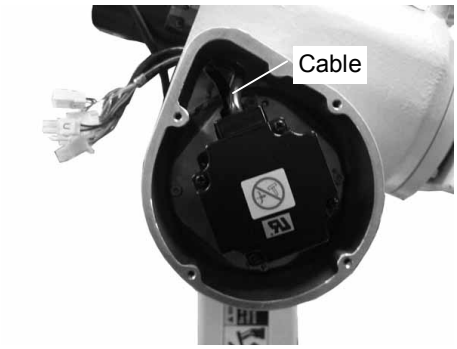

NOTE

- Wipe off any excess liquid gasket with a wiping cloth treated with alcohol.

Check the following with relation to the O-ring:
(Replace with a new O-ring if lost or damaged.)

- Is the O-ring securely installed on to the motor plate?
- Is there any damage and/or residue caked onto the O-ring (causing oil leakage)?
- Does the O-ring seat properly when the motor is inserted?

(6) Attach two connector packs (power system, signal system) to the cables and plug them into the J3 (U) power cable and signal cable connectors.

(7) Cover the connectors with the two connector packs.

(8) Bind the two connector packs with four wire ties.

(9) Attach the upper casing cover.
Refer to the *Maintenance 3.6 Upper Casing Cover* for details on attaching the upper casing cover.

(10) Attach the J3 cover.
Refer to the *Maintenance 3.4 J3 Cover* for details on attaching the J3 cover.

6.2 Replacing the Reduction Gear Unit

WARNING	■ Before performing any replacement procedure, turn OFF the Controller and related equipment, and then pull out the power plug from the power source. Performing any replacement procedure with the power ON is extremely hazardous and may result in electric shock and/or malfunction of the robot system. ■ Do not insert or pull out the motor connectors while the power to the robot system is turned ON. Inserting or pulling out the motor connectors with the power ON is extremely hazardous and may result in serious bodily injury as the Manipulator may move abnormally, and also may result in electric shock and/or malfunction of the robot system. ■ Be sure to connect the AC power cable to a power receptacle. DO NOT connect it directly to a factory power source. To shut off power to the robot system, pull out the power plug from the power source. Performing any work while connecting the AC power cable to a factory power source is extremely hazardous and may result in electric shock and/or malfunction of the robot system.

CAUTION	■ Be careful not to apply excessive shock to the motor shaft during replacement procedures. The shock may shorten the life cycle of the motors and encoder and/or damage them. ■ Carefully use alcohol, liquid gasket, and adhesive following respective instructions and also instructions below. Careless use of alcohol, liquid gasket, or adhesive may cause a fire and/or safety problems. - Never put alcohol, liquid gasket, or adhesive close to fire. - Use alcohol, liquid gasket, or adhesive while ventilating the room. - Wear protective gear including a mask, protective goggles, and oil-resistant gloves. - If alcohol, liquid gasket, or adhesive gets on your skin, wash the area thoroughly with soap and water. - If alcohol, liquid gasket, or adhesive gets into your eyes or mouth, flush your eyes or wash out your mouth with clean water thoroughly, and then see a doctor immediately. ■ Wear protective gear including a mask, protective goggles, and oil-resistant gloves during grease up. If grease gets into your eyes, mouth, or on your skin, follow the instructions below. If grease gets into your eyes : Flush them thoroughly with clean water, and then see a doctor immediately. If grease gets into your mouth : If swallowed, do not induce vomiting. See a doctor immediately. If grease just gets into your mouth, wash out your mouth with water thoroughly. If grease gets on your skin : Wash the area thoroughly with soap and water.

NOTE

- After parts have been replaced (motors, reduction gear units, timing belts, etc.), the Manipulator cannot perform positioning properly because a mismatch exists between the origin stored in each motor encoder and its corresponding origin stored in the Controller.
  After replacing the parts, it is necessary to match these origins.
  The process of aligning the two origins is called “Calibration”.
  Refer to *Maintenance 13. Calibration* and follow the steps that pertain to the software you are using to perform the calibration.

6.2.1 Type of Reduction Gear Unit

The type of the reduction gear unit used in Arm #J3 is shown in the table below.
When ordering a reduction gear unit for replacement, verify the arm number. Then, specify the code from the table below.

Item	Arm #	Code
J3 reduction gear unit	J3	R13B010004

6.2.2 Location of Reduction Gear Unit

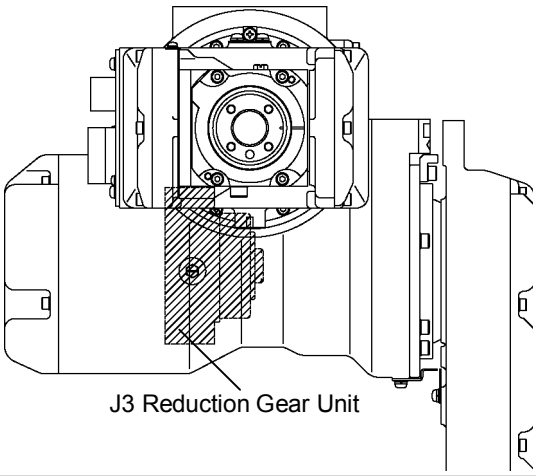

6.2.3 Structure of Reduction Gear Unit

A reduction gear unit consists of the waveform generator, flexspline, and circular spline. When replacing the reduction gear unit, be sure to always replace these parts all together as one set.
Refer to the *Maintenance 4.2.3 Structure of Reduction Gear Unit (Arm #J1)* for details.

6.2.4 How to Grease the Reduction Gear Unit

CAUTION	■ Wear protective gear including a mask, protective goggles, and oil-resistant gloves during grease up. If grease gets into your eyes, mouth, or on your skin, follow the instructions below. If grease gets into your eyes : Flush them thoroughly with clean water, and then see a doctor immediately. If grease gets into your mouth : If swallowed, do not induce vomiting. See a doctor immediately. If grease just gets into your mouth, wash out your mouth with water thoroughly. If grease gets on your skin : Wash the area thoroughly with soap and water.

When greasing the reduction gear unit, use only the grease specified for the reduction gear unit.
While greasing the reduction gear unit, be careful not to allow any foreign substances in the grease. The adequate quantities of grease are specified as follows:

Location for applying grease on J3 reduction gear unit	Grease quantity	Grease color	Code	Note
Teeth of the flexspline and the circular spline	35 g	Cream	R13B030302	4BNo2
Waveform generator				
Between the waveform generator and the motor plate	5 g			

Location for applying grease on the teeth of flexspline and circular spline and the waveform generator

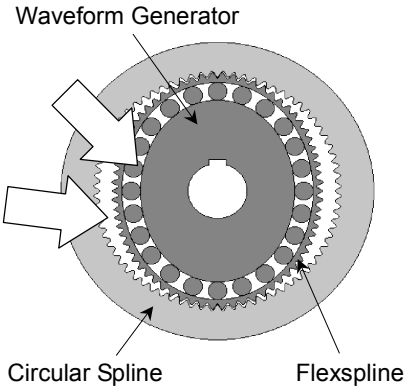

Location for applying grease between the waveform generator and the motor plate

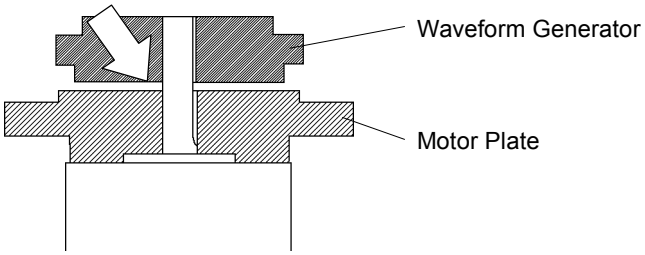

6.2.5 How to Replace the Reduction Gear Unit

WARNING	■ Always use at least two people when removing the motor unit. Remove the motor unit while one person is supporting the upper structure (Arms #J3 to #J6). The upper structure folds inward at Joint #3 as soon as the motor unit is removed and the brake is released. Failure to properly support the upper structure may result in serious bodily injury and/or severe equipment damage.

Maintenance Parts, Tools, and Material

	Name	Quantity	Note
Maintenance Parts	J3 reduction gear unit	1	R13B010004
	Grease for reduction gear (4BNo2)	40g	R13B030302
	Liquid gasket (1206C)	Proper quantity	R13B031201
	Adhesive (Loctite 242)	Proper quantity	R13B031701
	O-ring S90	1	For replacing O-ring R13B031206
Tools	Block	1	About 3-centimeter cube
	Hexagonal wrench	1 set	
	Flat blade screwdriver	1	
	Scraper	1	
	Sharpening stone	1	
	Nippers	1	
	Threaded rod (M4) for tap	2	
	Cloth	1	Lint-free For wiping grease
	Needle-nose pliers	1	
	Torque wrench	1	
	Alcohol	Proper quantity	
	Wiping cloth	2	For wiping liquid gasket For wiping adhesive
	Threaded rod (M4) for positioning	1	Length: 100 mm
Material	Wire tie	4	

Removal

NOTE

- We recommend folding the upper structure (Arms #J3 to #J6) to the stop side before the replacement.

(1) Remove the J3 motor unit from the Manipulator following the removal steps (1) to (8) in the *Maintenance 6.1.3 How to Replace the Motor*.

(2) Remove the bolts from the circular spline. Grasp the circular spline and remove it from the motor.
12-M4×20 hexagon socket head cap bolts with disc spring washers
2-M4 taps

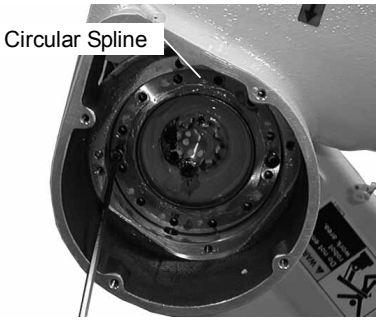

(3) Wipe the grease off the flexspline.
(Use a lint-free cloth that will not leave any fibers behind.)

(4) Remove the bolts and remove the flexspline.
8-M6×16 hexagon socket head cap bolts with disc spring washers
2-M4 taps

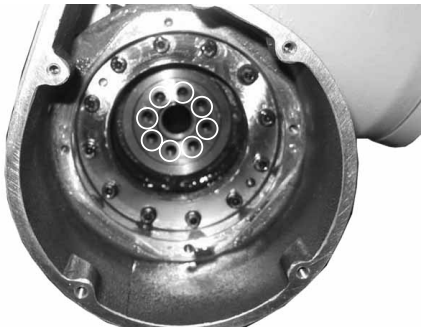

(5) Remove the flexspline cap from the flexspline.

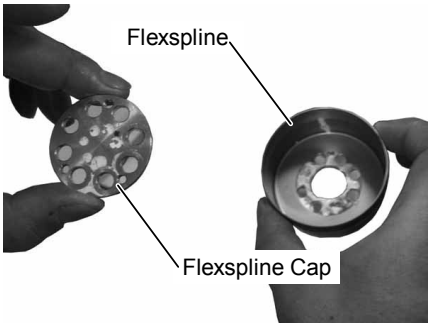

NOTE

- The flexspline cap is to be attached to the flexspline of the new reduction gear unit. Do not discard the flexspline cap along with the reduction gear unit.

Flexspline Cap

(6) Remove the bolt with hexagonal wrench and then remove the waveform generator from the motor unit.
1-M4×40 hexagon socket head cap bolt with disc spring washer

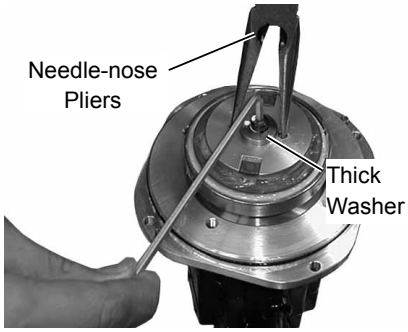

NOTE

- Hold the waveform generator with needle-nose pliers while removing the bolt to prevent the waveform generator from turning.
- Be careful not to lose the thick washer attached to the hexagon socket head cap bolt.

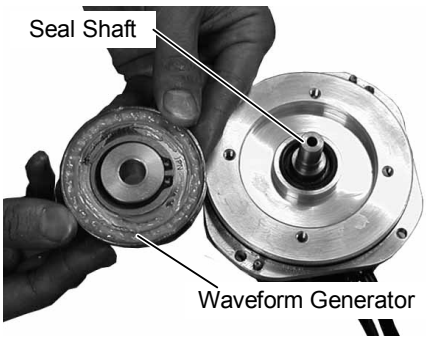

(7) Remove caked-on liquid gasket residue with a scraper or similar tool.

(8) Repair scratches incurred during tap use a sharpening stone or similar tool.

Installation

NOTE

- Double-check the bolts to make sure that you have not forgotten to tighten any of them.

(1) Apply grease (4BNo2) to the teeth of the flexspline and circular spline, and the waveform generator until the ball bearings of the waveform generator are covered. Refer to the *Maintenance 6.2.4 How to Grease the Reduction Gear Unit* for details.

(2) Apply adhesive to the bolt and secure the waveform generator to the motor unit together with the seal shaft with the bolt.
1-M4×40 hexagon socket head cap bolt with disc spring washer
Tightening torque 490 N·cm (50 kgf·cm)

NOTE

- Hold the waveform generator with needle-nose pliers while tightening the bolt to prevent the waveform generator from turning.
- Wipe off any excess liquid gasket on other parts with a wiping cloth treated with alcohol.

(3) Apply grease (4BNo2) between the waveform generator and the motor plate. Refer to the *Maintenance 6.2.4 How to Grease the Reduction Gear Unit* for details.

(4) Insert the circular spline into the Manipulator with the inscribed surface on the outside. Fasten it into place with the bolts.
12-M4×20 hexagon socket head cap bolts with disc spring washers
Tightening torque 490 N·cm (50 kgf·cm)

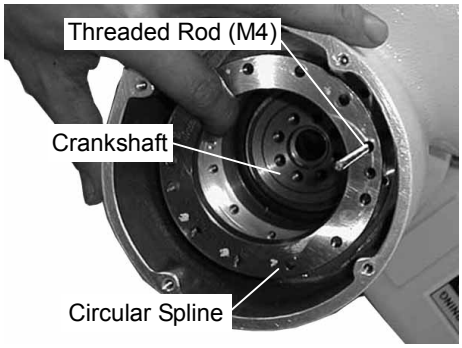

NOTE

- As necessary, insert a 100 mm threaded rod (M4) through the screw holes in the circular spline for positioning.

(5) Attach the flexspline cap to the flexspline.

(6) Apply liquid gasket to the boss protrusion (side) of the flexspline cap.

NOTE
- Make sure that no liquid gasket gets in the air holes.
- Wipe off any excess liquid gasket on other parts with a wiping cloth treated with alcohol.

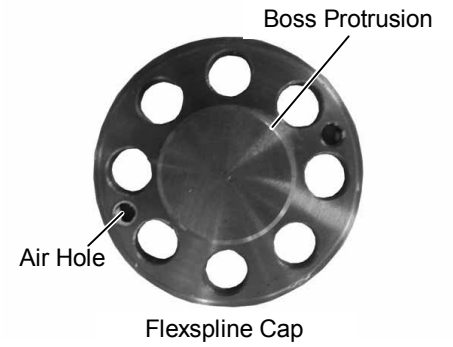

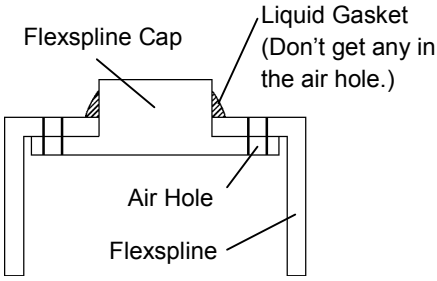

(7) Screw two threaded rods (M4) into the taps. Insert the flexspline parallel to the Manipulator using the viscosity of the liquid gasket.

NOTE
- Wipe off any excess liquid gasket on other parts with a wiping cloth treated with alcohol.

(8) Fasten the flexspline to the Manipulator with the bolts.
8-M6×16 hexagon socket head cap bolts with disc spring washers
Tightening torque 1,760 N·cm (180 kgf·cm)

NOTE
- Wipe excess liquid gasket from other parts of the Manipulator with a wiping cloth treated with alcohol.

(9) Fill the cup of the flexspline halfway with grease (4BNo2).

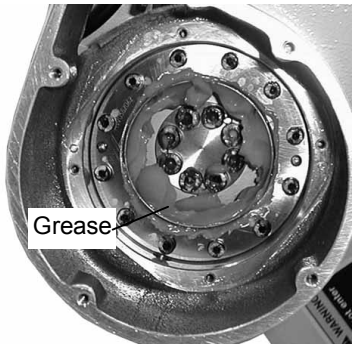

(10) Attach the J3 motor, the J3 cover, and the upper casing cover following the installation steps (4) to (10) in the *Maintenance 6.1.3 How to Replace the Motor*.

7. Arm #J4

7.1 Replacing the Motor

WARNING	■ Before performing any replacement procedure, turn OFF the Controller and related equipment, and then pull out the power plug from the power source. Performing any replacement procedure with the power ON is extremely hazardous and may result in electric shock and/or malfunction of the robot system. ■ Do not insert or pull out the motor connectors while the power to the robot system is turned ON. Inserting or pulling out the motor connectors with the power ON is extremely hazardous and may result in serious bodily injury as the Manipulator may move abnormally, and also may result in electric shock and/or malfunction of the robot system. ■ Be sure to connect the AC power cable to a power receptacle. DO NOT connect it directly to a factory power source. To shut off power to the robot system, pull out the power plug from the power source. Performing any work while connecting the AC power cable to a factory power source is extremely hazardous and may result in electric shock and/or malfunction of the robot system.

CAUTION	■ Be careful not to apply excessive shock to the motor shaft during replacement procedures. The shock may shorten the life cycle of the motors and encoder and/or damage them. ■ Never disassemble the motor and encoder. A disassembled motor and encoder will cause a positional gap and cannot be used again. ■ Carefully use alcohol, liquid gasket, and adhesive following respective instructions and also instructions below. Careless use of alcohol, liquid gasket, or adhesive may cause a fire and/or safety problems. - Never put alcohol, liquid gasket, or adhesive close to fire. - Use alcohol, liquid gasket, or adhesive while ventilating the room. - Wear protective gear including a mask, protective goggles, and oil-resistant gloves. - If alcohol, liquid gasket, or adhesive gets on your skin, wash the area thoroughly with soap and water. - If alcohol, liquid gasket, or adhesive gets into your eyes or mouth, flush your eyes or wash out your mouth with clean water thoroughly, and then see a doctor immediately.

CAUTION	■ Wear protective gear including a mask, protective goggles, and oil-resistant gloves during grease up. If grease gets into your eyes, mouth, or on your skin, follow the instructions below. If grease gets into your eyes : Flush them thoroughly with clean water, and then see a doctor immediately. If grease gets into your mouth : If swallowed, do not induce vomiting. See a doctor immediately. If grease just gets into your mouth, wash out your mouth with water thoroughly. If grease gets on your skin : Wash the area thoroughly with soap and water.

NOTE

- After parts have been replaced (motors, reduction gear units, timing belts, etc.), the Manipulator cannot perform positioning properly because a mismatch exists between the origin stored in each motor encoder and its corresponding origin stored in the Controller. After replacing the parts, it is necessary to match these origins. The process of aligning the two origins is called "Calibration". Refer to *Maintenance 13. Calibration* and follow the steps that pertain to the software you are using to perform the calibration.

7.1.1 Type of Motor

The motor type used in Arm #J4 is shown in the table below.
When ordering a motor for replacement, verify the arm number. Then, specify the code from the table below.

Item	Arm #	Code	Note
AC servo motor 50W with brake	J4	R13B000604	50W

7.1.2 Location of Motor

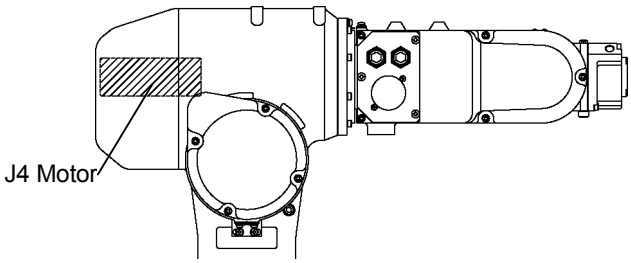

7.1.3 How to Replace the Motor

Maintenance Parts, Tools, and Material

	Name	Quantity	Note
Maintenance Parts	AC servo motor 50W with brake	1	R13B000604
	Grease for reduction gear (4BNo2)	3 g	R13B030302
	Liquid gasket (1206C)	Proper quantity	R13B031201
	Oil seal	1	For replacing oil seal R13B031210
	Adhesive (Loctite 242)	Proper quantity	R13B031701
	O-ring S60	1	For replacing O-ring R13B031205
Tools	Hexagonal wrench	1 set	
	Flat blade screwdriver	1	
	Scraper	1	
	Nippers	1	
	Needle-nose pliers	1	
	Hand press	1	For replacing oil seal
	Torque wrench	1	
	Alcohol	Proper quantity	
	Wiping cloth	2	For wiping liquid gasket For wiping adhesive
Material	Wire tie	5	

Removal

(1) Remove the upper casing cover.

Refer to the *Maintenance 3.6 Upper Casing Cover* for details on removing the upper casing cover.

(2) Cut four wire ties that bind two connector packs (power system, signal system) that are located inside the upper casing.

NOTE

- Cables are divided by system (power, signal) instead of by joint. Do not unplug the J3 (U) connectors by mistake. The arm position data will be lost and the arm needs to be calibrated again if the J3 (U) connectors are unplugged.

(3) Move the two connector packs away from the connectors.

(4) Unplug the J4 (R) connectors for the power cable and the signal cable. Remove the two connector packs.

(5) Remove the bolts that fasten the upper clamp hardware. (The upper clamp hardware and the motor plate are secured with the same bolts.)
After removing the bolts, pull the motor towards you.
2-M4×16 hexagon socket head cap bolts with plain washers

(6) Cut the wire ties and pull the upper clamp hardware out.

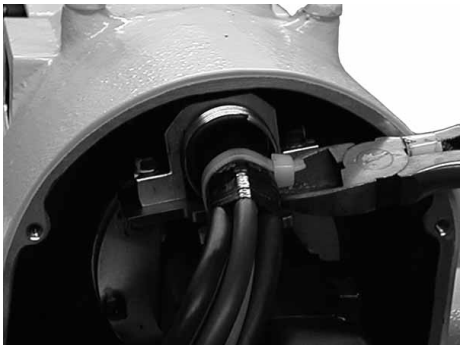

(7) Remove the bolts that fasten the lower clamp hardware. (The lower clamp hardware and the motor plate are secured with the same bolts.)
2-M4×16 hexagon socket head cap bolts with plain washers

(8) Remove the bolts from the motor plate. Slide the motor unit out of the Manipulator.
2-M4×12 hexagon socket head cap bolts with plain washers

(9) Remove the bolt with hexagonal wrench and then remove the waveform generator from the motor unit.
1-M3×20 hexagon socket head cap bolt with disc spring washer

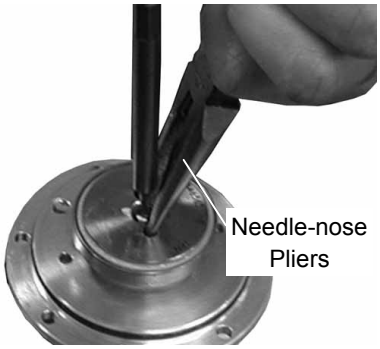

NOTE

- Hold the waveform generator with needle-nose pliers while removing the bolt to prevent the waveform generator from turning.

(10) Remove the seal shaft from the motor shaft.

(11) Make a tram mark between the motor and the motor plate.

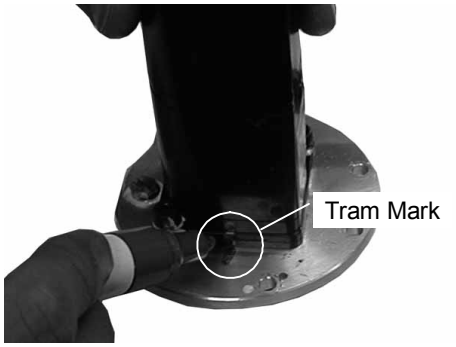

(12) Remove the bolts and then remove the motor from the motor plate.
2-M4×16 hexagon socket head cap bolts with plain washers

NOTE

- Be careful not to lose the O-ring on the motor plate.

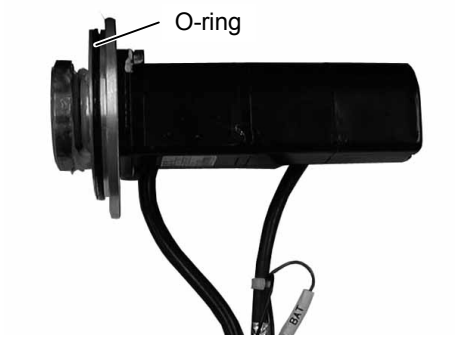

(13) Remove caked-on liquid gasket residue with a scraper or similar tool.

(14) Check the oil seal on the motor plate. If the oil seal shows signs of deterioration (if it is no longer effective), refer to the following procedure for details on how to replace it.
(The photograph shows the J2 oil seal.)

Oil Seal Replacement Procedure

(1) Remove the oil seal with a hand press or similar tool to dislodge it, from the side opposite the oil reservoir.

(2) Apply grease (4BNo2) to the contact zone between the motor shaft and a new oil seal.

(3) Attach the oil seal from the reduction gear unit side to ensure that the oil reservoir is located at reduction gear unit side.

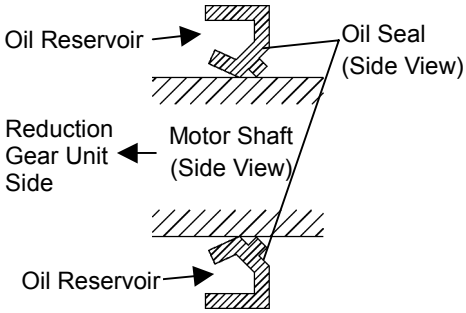

Installation

NOTE
- Double-check the bolts to make sure that you have not forgotten to tighten any of them.

(1) Apply liquid gasket to the bolts and fasten the motor plate to the motor with the bolts.
2-M4×16 hexagon socket head cap bolts with plain washers
Tightening torque 280 N·cm (29 kgf·cm)

NOTE
-Position the motor properly using the tram mark from the old motor.
Wipe off any excess liquid gasket on other parts with a wiping cloth treated with alcohol.

(2) Apply liquid gasket to the bottom of the waveform generator seal shaft. (The bottom of the seal shaft is the surface where the seal shaft connects to the motor shaft.) Attach the seal shaft to the motor shaft.

NOTE
- Wipe off any excess liquid gasket with a wiping cloth treated with alcohol.

(3) Apply adhesive to the bolt and secure the waveform generator to the motor unit together with the seal shaft with the bolt.
1-M3×20 hexagon socket head cap bolt with disc spring washer
Tightening torque 245 N·cm (25 kgf·cm)

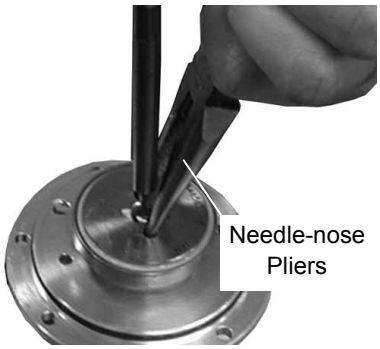

NOTE

-Hold the waveform generator with needle-nose pliers while tightening the bolt to prevent the waveform generator from turning.

- Wipe off any excess liquid gasket on other parts with a wiping cloth treated with alcohol.

(4) Apply grease (4BNo2) to the waveform generator.

(5) Point the cable side of the motor so that it faces right. Insert the motor into the Manipulator. Apply liquid gasket to the bolts and fasten the motor unit with bolts.
2-M4×12 hexagon socket head cap bolts with plain washers
Tightening torque 280 N·cm (29 kgf·cm)

NOTE

- Hold the upper arm level (Arms #J3 to #J6) when inserting the motor.
- Wipe off any excess liquid gasket from other parts of the Manipulator with a wiping cloth treated with alcohol.

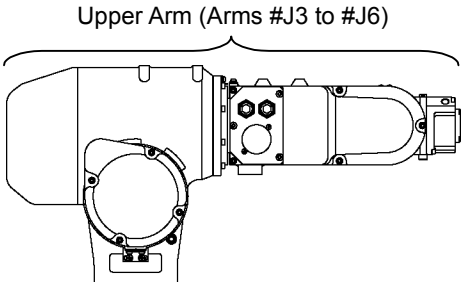

Check the following with relation to the O-ring:
(Replace with a new O-ring if lost or damaged.)
- Is the O-ring securely installed on the motor plate?
- Is there any damage and/or residue caked onto the O-ring (causing oil leakage)?
- Does the O-ring seat properly when the motor is inserted?

(6) Bundle the upper clamp hardware and fasten it with a wire tie.

(7) Secure the upper and lower clamp hardware to the Manipulator with the bolts. (The upper and lower clamp hardware and the motor plate are secured with the same bolts.)
4-M4×16 hexagon socket head cap bolts with plain washers
Tightening torque 280 N·cm (29 kgf·cm)

(8) Attach two connector packs (power system, signal system) to the cables and plug them into the J4 (R) power cable and signal cable connectors.

(9) Cover the connectors with the two connector packs.

(10) Bind the two connector packs with four wire ties.

(11) Attach the upper casing cover.
Refer to the *Maintenance 3.6 Upper Casing Cover* for details on how to attach the upper casing cover.

7.2 Replacing the Reduction Gear Unit

WARNING	■ Before performing any replacement procedure, turn OFF the Controller and related equipment, and then pull out the power plug from the power source. Performing any replacement procedure with the power ON is extremely hazardous and may result in electric shock and/or malfunction of the robot system. ■ Do not insert or pull out the motor connectors while the power to the robot system is turned ON. Inserting or pulling out the motor connectors with the power ON is extremely hazardous and may result in serious bodily injury as the Manipulator may move abnormally, and also may result in electric shock and/or malfunction of the robot system. ■ Be sure to connect the AC power cable to a power receptacle. DO NOT connect it directly to a factory power source. To shut off power to the robot system, pull out the power plug from the power source. Performing any work while connecting the AC power cable to a factory power source is extremely hazardous and may result in electric shock and/or malfunction of the robot system.

CAUTION	■ Be careful not to apply excessive shock to the motor shaft during replacement procedures. The shock may shorten the life cycle of the motors and encoder and/or damage them. ■ Carefully use alcohol, liquid gasket, and adhesive following respective instructions and also instructions below. Careless use of alcohol, liquid gasket, or adhesive may cause a fire and/or safety problems. - Never put alcohol, liquid gasket, or adhesive close to fire. - Use alcohol, liquid gasket, or adhesive while ventilating the room. - Wear protective gear including a mask, protective goggles, and oil-resistant gloves. - If alcohol, liquid gasket, or adhesive gets on your skin, wash the area thoroughly with soap and water. - If alcohol, liquid gasket, or adhesive gets into your eyes or mouth, flush your eyes or wash out your mouth with clean water thoroughly, and then see a doctor immediately. ■ Wear protective gear including a mask, protective goggles, and oil-resistant gloves during grease up. If grease gets into your eyes, mouth, or on your skin, follow the instructions below. If grease gets into your eyes : Flush them thoroughly with clean water, and then see a doctor immediately. If grease gets into your mouth : If swallowed, do not induce vomiting. See a doctor immediately. If grease just gets into your mouth, wash out your mouth with water thoroughly. If grease gets on your skin : Wash the area thoroughly with soap and water.

NOTE

- After parts have been replaced (motors, reduction gear units, timing belts, etc.), the Manipulator cannot perform positioning properly because a mismatch exists between the origin stored in each motor encoder and its corresponding origin stored in the Controller.
  After replacing the parts, it is necessary to match these origins.
  The process of aligning the two origins is called “Calibration”.
  Refer to *Maintenance 13. Calibration* and follow the steps that pertain to the software you are using to perform the calibration.

7.2.1 Type of Reduction Gear Unit

The type of the reduction gear unit used in Arm #J4 is shown in the table below.
When ordering a reduction gear unit for replacement, verify the arm number. Then, specify the code from the table below.

Item	Arm #	Code
J4 reduction gear unit	J4	R13B010005

7.2.2 Location of Reduction Gear Unit

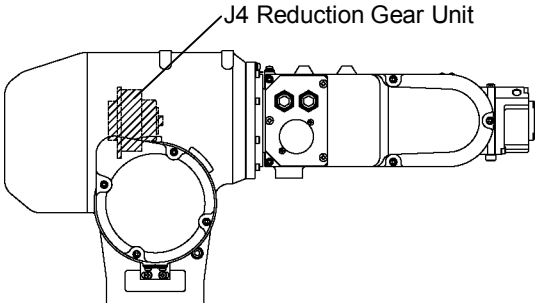

7.2.3 Structure of Reduction Gear Unit

A reduction gear unit consists of the waveform generator, flexspline, and circular spline. When replacing the reduction gear unit, be sure to always replace these parts all together as one set.

Refer to the *Maintenance 4.2.3 Structure of Reduction Gear Unit (Arm #J1)* for details.

7.2.4 How to Grease the Reduction Gear Unit

CAUTION	■ Wear protective gear including a mask, protective goggles, and oil-resistant gloves during grease up. If grease gets into your eyes, mouth, or on your skin, follow the instructions below. If grease gets into your eyes : Flush them thoroughly with clean water, and then see a doctor immediately. If grease gets into your mouth : If swallowed, do not induce vomiting. See a doctor immediately. If grease just gets into your mouth, wash out your mouth with water thoroughly. If grease gets on your skin : Wash the area thoroughly with soap and water.

When greasing the reduction gear unit, use only the grease specified for the reduction gear unit.
While greasing the reduction gear units, be careful not to allow any foreign substances in the grease. The adequate quantities of grease are specified as follows:

Location for applying grease on J4 reduction gear unit	Grease quantity	Grease color	Code	Note
Teeth of the flexspline and the circular spline	8 g	Cream	R13B030302	4BNo2
Waveform generator				
Between the waveform generator and the motor plate	3 g			

Location for applying grease on the teeth of flexspline and circular spline and the waveform generator

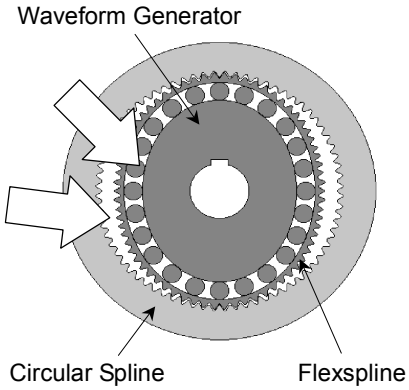

Location for applying grease between the waveform generator and the motor plate

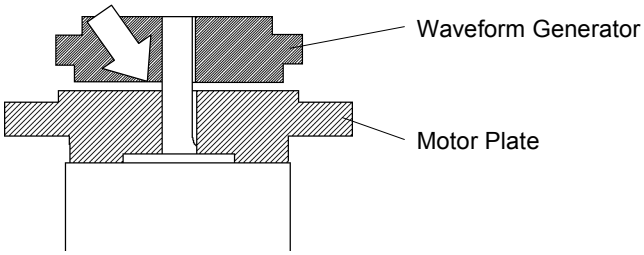

7.2.5 How to Replace the Reduction Gear Unit

Maintenance Parts, Tools, and Material

	Name	Quantity	Note
Maintenance Parts	J4 reduction gear unit	1	R13B010005
	Grease for reduction gear (4BNo2)	11 g	R13B030302
	Liquid gasket (1206C)	Proper quantity	R13B031201
	Adhesive (Loctite 242)	Proper quantity	R13B031701
	O-ring S60	1	For replacing O-ring R13B031205
Tools	Hexagonal wrench	1 set	
	Flat blade screwdriver	1	
	Scraper	1	
	Sharpening stone	1	
	Nippers	1	
	Threaded rod (M3) for tap	2	
	Cloth	1	Lint-free For wiping grease
	Needle-nose pliers	1	
	Torque wrench	1	
	Alcohol	Proper quantity	
	Wiping cloth	2	For wiping liquid gasket For wiping adhesive
	Threaded rod (M3) for positioning	1	Length: 100 mm
Material	Wire tie	5	

Removal

(1) Remove the J4 motor unit from the Manipulator following the removal steps (1) to (8) in the *Maintenance 7.1.3 How to Replace the Motor*.

(2) Remove the bolts from the circular spline with hexagonal wrench. Pull the circular spline off the Manipulator.
12-M3×12 hexagon socket head cap bolts with plain washers
2-M3 taps

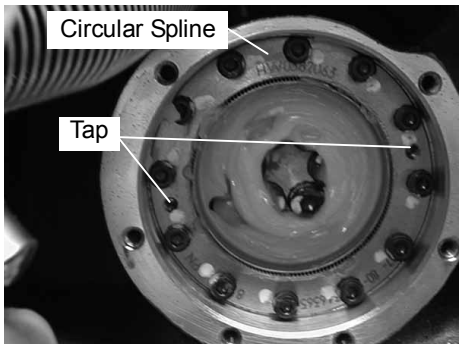

(3) Wipe the grease off the flexspline. (Use a lint-free cloth that will not leave any fibers behind.)

(4) Remove the bolts with hexagonal wrench. Pull the flexspline off the Manipulator.

6-M5×16 hexagon socket head cap bolts with plain washers

2-M3 taps

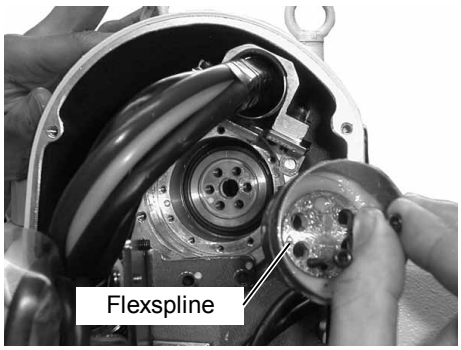

NOTE

- Grasp Arm #J4 while removing the bolts with hexagonal wrench to prevent the flexspline from turning.

(5) Remove the flexspline cap from the flexspline.

NOTE

- The flexspline cap is to be attached to the flexspline of the new reduction gear unit. Do not discard the flexspline cap along with the reduction gear unit.

Flexspline Cap

(6) Remove the bolt with hexagonal wrench and then remove the waveform generator from the motor unit.

1-M3×20 hexagon socket head cap bolt with disc spring washer

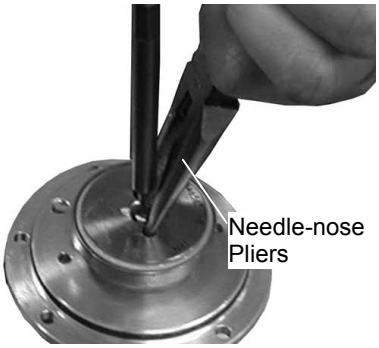

NOTE

- Hold the waveform generator with needle-nose pliers while removing the bolt to prevent the waveform generator from turning.

(7) Remove caked-on liquid gasket residue with a scraper or similar tool.

(8) Repair scratches incurred during tap use with a sharpening stone or similar tool.

Installation

NOTE

- Double-check the bolts to make sure that you have not forgotten to tighten any of them.

(1) Apply grease (4BNo2) to the teeth of the flexspline and circular spline, and the waveform generator until the ball bearings of the waveform generator are covered. Refer to the *Maintenance 7.2.4 How to Grease the Reduction Gear Unit* for details.

(2) Apply adhesive to the bolt and secure the waveform generator to the motor unit together with the seal shaft with the bolt.

1-M3×20 hexagon socket head cap bolt with disc spring washer

Tightening torque 245 N·cm (25 kgf·cm)

NOTE

- Hold the waveform generator with needle-nose pliers while tightening the bolt to prevent the waveform generator from turning.
- Wipe off any excess liquid gasket on other parts with a wiping cloth treated with alcohol.

(3) Apply grease (4BNo2) between the waveform generator and the motor plate. Refer to the *Maintenance 7.2.4 How to Grease the Reduction Gear Unit* for details.

(4) Insert the circular spline into the Manipulator with the inscribed surface on the outside and fasten it into place with the bolts.

12-M3×12 hexagon socket head cap bolts with plain washers

Tightening torque 245 N·cm (25 kgf·cm)

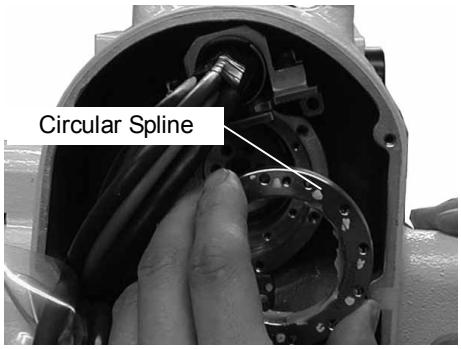

NOTE

- As necessary, insert a 100 mm threaded rod (M3) through the screw hole in the circular spline for positioning.

(5) Attach the flexspline cap to the flexspline.

(6) Apply liquid gasket to the boss protrusion (side) of the flexspline cap.

NOTE

- Make sure that no liquid gasket gets in the air holes.
- Wipe off any excess liquid gasket on other parts with a wiping cloth treated with alcohol.

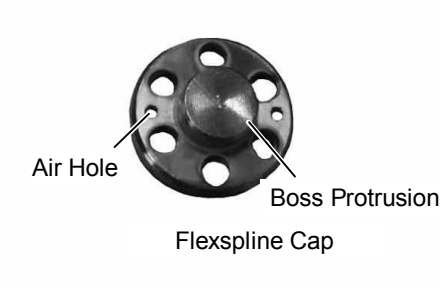

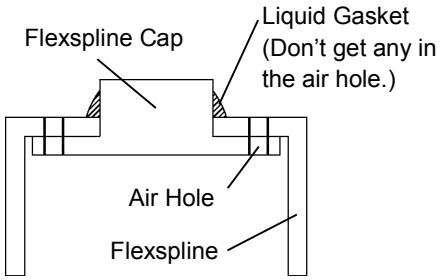

(7) Screw two threaded rods (M3) into the taps. Use the viscosity of the liquid gasket to insert the flexspline parallel to the Manipulator.

NOTE

- Align the air holes on the flexspline and the flexspline cap with the hole of the crankshaft. Insert the flexspline and the flexspline cap.

(8) Apply liquid gasket to the bolts and fasten the flexspline to the Manipulator with the bolts.

6-M5×16 hexagon socket head cap bolts with plain washers

Tightening torque 980 N·cm (100 kgf·cm)

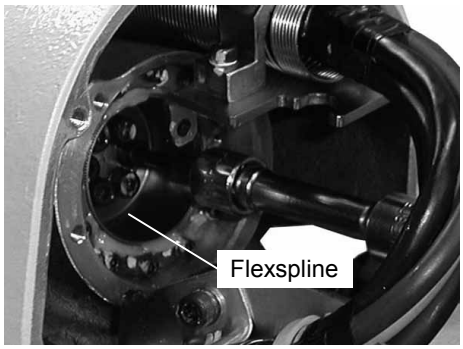

NOTE

- Grasp Arm #J4 while fastening the bolts with hexagonal wrench to prevent the flexspline from turning.
- Wipe off any excess liquid gasket on other parts with a wiping cloth treated with alcohol.

(9) Fill the cup of the flexspline halfway with grease (4BNo2).

(10) Attach the J4 motor and the upper casing cover following the installation steps (4) to (11) in the *Maintenance 7.1.3 How to Replace the Motor*.

8. Arm #J5

8.1 Replacing the Motor

WARNING	■ Before performing any replacement procedure, turn OFF the Controller and related equipment, and then pull out the power plug from the power source. Performing any replacement procedure with the power ON is extremely hazardous and may result in electric shock and/or malfunction of the robot system. ■ Do not insert or pull out the motor connectors while the power to the robot system is turned ON. Inserting or pulling out the motor connectors with the power ON is extremely hazardous and may result in serious bodily injury as the Manipulator may move abnormally, and also may result in electric shock and/or malfunction of the robot system. ■ Be sure to connect the AC power cable to a power receptacle. DO NOT connect it directly to a factory power source. To shut off power to the robot system, pull out the power plug from the power source. Performing any work while connecting the AC power cable to a factory power source is extremely hazardous and may result in electric shock and/or malfunction of the robot system.

CAUTION	■ Be careful not to apply excessive shock to the motor shaft during replacement procedures. The shock may shorten the life cycle of the motors and encoder and/or damage them. ■ Never disassemble the motor and encoder. A disassembled motor and encoder will cause a positional gap and cannot be used again. ■ Carefully use alcohol, liquid gasket, and adhesive following respective instructions and also instructions below. Careless use of alcohol, liquid gasket, or adhesive may cause a fire and/or safety problems. - Never put alcohol, liquid gasket, or adhesive close to fire. - Use alcohol, liquid gasket, or adhesive while ventilating the room. - Wear protective gear including a mask, protective goggles, and oil-resistant gloves. - If alcohol, liquid gasket, or adhesive gets on your skin, wash the area thoroughly with soap and water. - If alcohol, liquid gasket, or adhesive gets into your eyes or mouth, flush your eyes or wash out your mouth with clean water thoroughly, and then see a doctor immediately.

NOTE

- After parts have been replaced (motors, reduction gear units, timing belts, etc.), the Manipulator cannot perform positioning properly because a mismatch exists between the origin stored in each motor encoder and its corresponding origin stored in the Controller. After replacing the parts, it is necessary to match these origins.
  The process of aligning the two origins is called “Calibration”.
  Refer to *Maintenance 13. Calibration* and follow the steps that pertain to the software you are using to perform the calibration.

8.1.1 Type of Motor

The motor type used in Arm #J5 is shown in the table below.
When ordering a motor for replacement, verify the arm number. Then, specify the code from the table below.

Item	Arm #	Code	Note
AC servo motor 50W with brake	J5	R13B000604	50W

8.1.2 Location of Motor

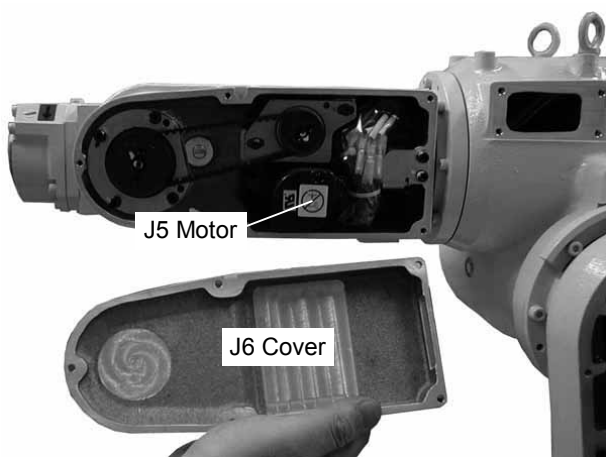

8.1.3 How to Replace the Motor

Maintenance Parts, Tools, and Material

	Name	Quantity	Note
Maintenance Parts	AC servo motor 50W with brake	1	R13B000604
	Liquid gasket (1206C)	Proper quantity	R13B031201
	Adhesive (Loctite 242)	Proper quantity	R13B031701
Tools	Hexagonal wrench	1 set	
	Flat blade screwdriver	1	
	Scraper	1	
	Nippers	1	
	Needle-nose pliers	1	
	Torque wrench	1	
	Alcohol	Proper quantity	
	Wiping cloth	2	For wiping adhesive For wiping liquid gasket
Material	Wire tie	6	

Removal

WARNING	■ Lower Arm #J5 before starting the J5 motor replacement. Removing the motor will disengage the brake, which may cause the Manipulator to fall and may result in serious bodily injury and/or severe equipment damage.

(1) Remove the J5 and J6 covers.

Refer to the *Maintenance 3.8 J5 Cover* for details on removing the J5 Cover.

Refer to the *Maintenance 3.9 J6 Cover* for details on removing the J6 Cover.

(2) Pull the power system connector pack (6 pin) to the Arm #J5 side and the signal system connector pack (4 pin) to the Arm #J6 side.

NOTE
- Cables are divided by system (power, signal) instead of by joint. Do not unplug the J6 (T) connectors by mistake. The arm position data will be lost and the arm will need to be calibrated again if the J6 (T) connectors are unplugged.

(3) Cut four wire ties that bind the two connector packs (power system, signal system) and remove two connector packs.

(4) Unplug the J5 (B) connectors for the power cable and the signal cable.

(5) Remove the bolts from the motor plate. Pull the motor unit out so that it is leaning towards you and remove the timing belt from the motor pulley.
2-M4×12 hexagon socket head cap bolts with plain washers

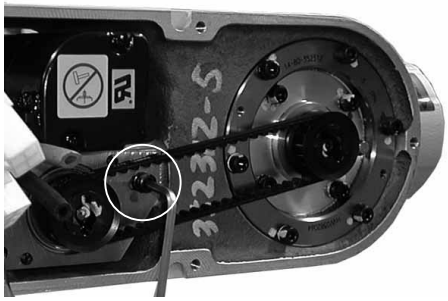

(6) Remove the motor unit by pulling it towards you.

NOTE
- The signal cable leads to the Arm #J6 side. Be careful not to damage the cable when removing the motor unit.

(7) Remove the bolt with hexagonal wrench and then remove the motor pulley from the motor unit.
1-M3×12 hexagon socket head cap bolt with disc spring washer

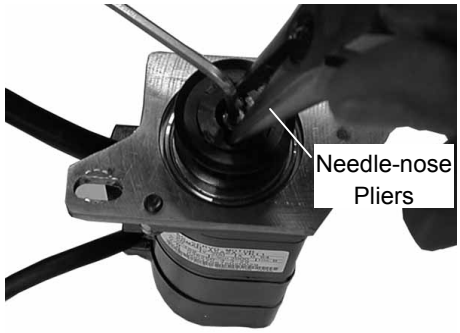

NOTE
- Hold the motor pulley with needle-nose pliers while removing the bolt to prevent the motor pulley from turning.

(8) Make a tram mark between the motor and the motor plate.

(9) Remove the bolts and then remove the motor from the motor plate.
2-M4×12 hexagon socket head cap bolts with plain washers

Installation

NOTE
- Double-check the bolts to make sure that you have not forgotten to tighten any of them.

(1) Fasten the motor plate to the motor with the bolts.
2-M4×12 hexagon socket head cap bolts with plain washers
Tightening torque 280 N·cm (29 kgf·cm)

NOTE
- Position the motor properly using the tram mark from the old motor.

(2) Apply adhesive to the bolt and attach the motor pulley to the motor with the bolt.
1-M3×12 hexagon socket head cap bolt with disc spring washer
Tightening torque 245 N·cm (25 kgf·cm)

NOTE
- Hold the motor pulley with needle-nose pliers while tightening the bolt to prevent the motor pulley from turning.
- Wipe off any excess liquid gasket on other parts with a wiping cloth treated with alcohol.

(3) Insert the motor unit back into its original position so that the signal cable (4 pin) protrudes from the far side (J6 cover side) and the power cable (6 pin) protrudes from the near side (J5 cover side).

(4) Attach the timing belt to the pulley and the motor pulley. Loosely fasten the motor plate with the bolts.
2-M4×12 hexagon socket head cap bolts with plain washers

(5) Apply tension (26.5 N (2.7 kgf)) to the timing belt. Securely fasten the motor plate that you loosely fastened in step (4) above.

Tightening torque 280 N·cm (29 kgf·cm)

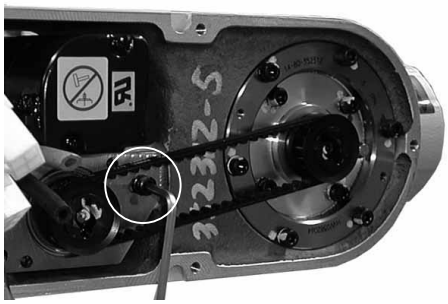

(6) Connect the J5 power and signal cables.

(7) Cover the connectors with the two connector packs (power system, signal system) and bind the connector packs with four wire ties.

(8) Attach the J5 and J6 covers.

Refer to the *Maintenance 3.8 J5 Cover* for details on how to attach the J5 cover.

Refer to the *Maintenance 3.9 J6 Cover* for details on how to attach the J6 cover.

8.2 Replacing the Reduction Gear Unit

WARNING	■ Before performing any replacement procedure, turn OFF the Controller and related equipment, and then pull out the power plug from the power source. Performing any replacement procedure with the power ON is extremely hazardous and may result in electric shock and/or malfunction of the robot system. ■ Do not insert or pull out the motor connectors while the power to the robot system is turned ON. Inserting or pulling out the motor connectors with the power ON is extremely hazardous and may result in serious bodily injury as the Manipulator may move abnormally, and also may result in electric shock and/or malfunction of the robot system. ■ Be sure to connect the AC power cable to a power receptacle. DO NOT connect it directly to a factory power source. To shut off power to the robot system, pull out the power plug from the power source. Performing any work while connecting the AC power cable to a factory power source is extremely hazardous and may result in electric shock and/or malfunction of the robot system.

CAUTION	■ Be careful not to apply excessive shock to the motor shaft during replacement procedures. The shock may shorten the life cycle of the motors and encoder and/or damage them. ■ Carefully use alcohol, liquid gasket, and adhesive following respective instructions and also instructions below. Careless use of alcohol, liquid gasket, or adhesive may cause a fire and/or safety problems. - Never put alcohol, liquid gasket, or adhesive close to fire. - Use alcohol, liquid gasket, or adhesive while ventilating the room. - Wear protective gear including a mask, protective goggles, and oil-resistant gloves. - If alcohol, liquid gasket, or adhesive gets on your skin, wash the area thoroughly with soap and water. - If alcohol, liquid gasket, or adhesive gets into your eyes or mouth, flush your eyes or wash out your mouth with clean water thoroughly, and then see a doctor immediately. ■ Wear protective gear including a mask, protective goggles, and oil-resistant gloves during grease up. If grease gets into your eyes, mouth, or on your skin, follow the instructions below. If grease gets into your eyes : Flush them thoroughly with clean water, and then see a doctor immediately. If grease gets into your mouth : If swallowed, do not induce vomiting. See a doctor immediately. If grease just gets into your mouth, wash out your mouth with water thoroughly. If grease gets on your skin : Wash the area thoroughly with soap and water.

NOTE

- After parts have been replaced (motors, reduction gear units, timing belts, etc.), the Manipulator cannot perform positioning properly because a mismatch exists between the origin stored in each motor encoder and its corresponding origin stored in the Controller.
  After replacing the parts, it is necessary to match these origins.
  The process of aligning the two origins is called “Calibration”.
  Refer to *Maintenance 13. Calibration* and follow the steps that pertain to the software you are using to perform the calibration.

8.2.1 Type of Reduction Gear Unit

The type of the reduction gear unit used in Arm #J5 is shown in the table below.
When ordering a reduction gear unit for replacement, verify the arm number. Then, specify the code from the table below.

Item	Arm #	Code
J5 reduction gear unit	J5	R13B010006

8.2.2 Location of Reduction Gear Unit

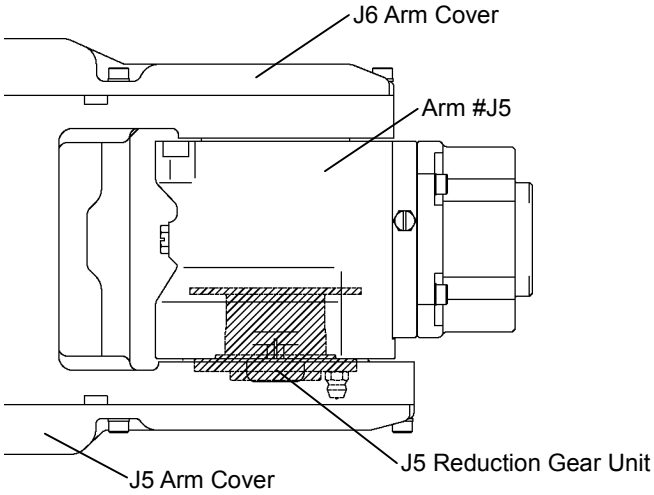

8.2.3 Structure of Reduction Gear Unit

A reduction gear unit consists of the waveform generator, flexspline, and circular spline. When replacing the reduction gear unit, be sure to always replace these parts all together as one set.

Refer to the *Maintenance 4.2.3 Structure of Reduction Gear Unit (Arm #J1)* for details.

8.2.4 How to Grease the Reduction Gear Unit

CAUTION	■ Wear protective gear including a mask, protective goggles, and oil-resistant gloves during grease up. If grease gets into your eyes, mouth, or on your skin, follow the instructions below. If grease gets into your eyes : Flush them thoroughly with clean water, and then see a doctor immediately. If grease gets into your mouth : If swallowed, do not induce vomiting. See a doctor immediately. If grease just gets into your mouth, wash out your mouth with water thoroughly. If grease gets on your skin : Wash the area thoroughly with soap and water.

When greasing the reduction gear unit, use only the grease specified for the reduction gear unit.
While greasing the reduction gear unit, be careful not to allow any foreign substances in the grease. The adequate quantities of grease are specified as follows:

Location for applying grease on J5 reduction gear unit	Grease quantity	Grease color	Code	Note
Teeth of the flexspline and the circular spline Waveform generator	11 g	Cream	R13B030302	4BNo2

Location for applying grease on the teeth of flexspline and circular spline and the waveform generator

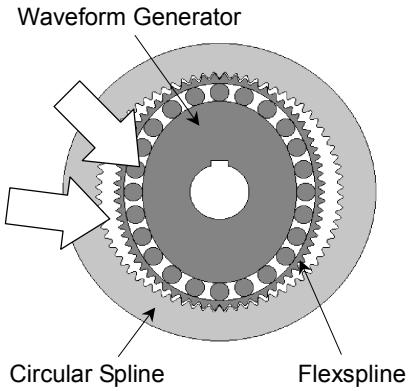

8.2.5 How to Replace the Reduction Gear Unit

Maintenance Parts, Tools, and Material

	Name	Quantity	Note
Maintenance Parts	J5 reduction gear unit	1	R13B010006
	Grease for reduction gear (4BNo2)	11 g	R13B030302
	Liquid gasket (1206C)	Proper quantity	R13B031201
	Adhesive (Loctite 242)	Proper quantity	R13B031701
Tools	Hexagonal wrench	1 set	
	Flat blade screwdriver	1	
	Scraper	1	
	Sharpening stone	1	
	Nippers	1	
	Threaded rod (M4) for tap	2	
	Cloth	1	Lint-free For wiping grease
	Torque wrench	1	
	Threaded rod (M4) for positioning	1	Length: 50 mm
	Alcohol	Proper quantity	
	Wiping cloth	2	For wiping liquid gasket For wiping adhesive
Material	Wire tie	6	

Removal

WARNING	■ Lower Arm #J5 before starting J5 reduction gear unit replacement. Removing the motor will disengage the brake, which may cause the Manipulator to fall and may result in serious bodily injury and/or severe equipment damage.

(1) Remove the timing belt from the pulley following the removal steps (1) to (5) in the *Maintenance 8.1.3 How to Replace the Motor*.

(2) Remove the bolt with hexagonal wrench and then remove the pulley from the reduction gear unit.

1-M3×12 hexagon socket head cap bolt with disc spring washer

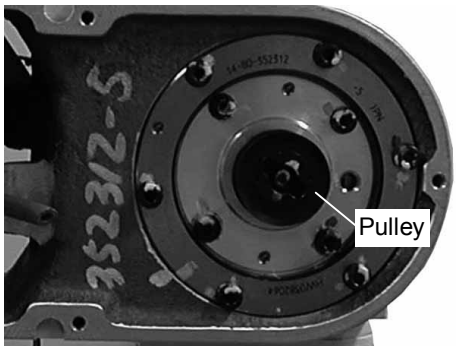

NOTE

- Grasp Arm #J5 while removing the bolt with hexagonal wrench to prevent the pulley from turning.

(3) Make a tram mark between the waveform generator plate and the circular spline.

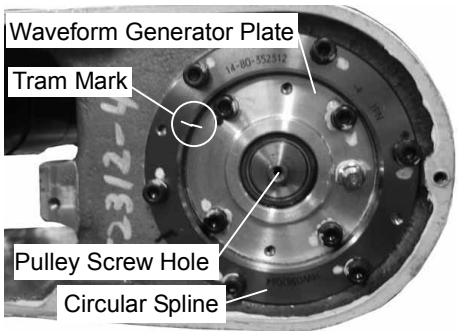

(4) Remove the bolts from the waveform generator plate. Then, remove the waveform generator and the waveform generator plate.

4-M4×12 hexagon socket head cap bolts with plain washers

2-M4 taps

(5) Remove the waveform generator from the waveform generator plate.

(6) Make a tram mark between the Manipulator and the circular spline.

(7) Remove the bolts from the circular spline. Grasp the circular spline and remove it from the Manipulator.

6-M4×10 hexagon socket head cap bolts with plain washers

2-M4 taps

(8) Wipe the grease off the flexspline. (Use a lint-free cloth that will not leave any fibers behind.)

(9) Remove the bolts and then remove the flexspline from the Manipulator.
7-M3×8 hexagon socket head cap bolts with disc spring washers

(10) Remove caked-on liquid gasket residue with a scraper or similar tool.

(11) Repair scratches incurred during tap use with a sharpening stone or similar tool.

Installation

NOTE
- Double-check the bolts to make sure that you have not forgotten to tighten any of them.

(1) Apply grease (4BNo2) to the teeth of the flexspline and circular spline, and the waveform generator until the ball bearings of the waveform generator are covered. Refer to the *Maintenance 8.2.4 How to Grease the Reduction Gear Unit* for details.

(2) Fasten the flexspline to the Manipulator with the bolts.
7-M3×8 hexagon socket head cap bolts with disc spring washers
Tightening torque 245 N·cm (25 kgf·cm)

NOTE
- Grasp Arm #J5 while fastening the bolts with hexagonal wrench to prevent the flexspline from turning.

(3) Insert the circular spline parallel to the Manipulator.

NOTE
- As necessary, insert a 50 mm threaded rod (M4) through the screw hole in the circular spline for positioning.
- Position the circular spline properly using the tram mark on the old circular spline.

(4) Apply liquid gasket to the bolts and fasten the circular spline to the Manipulator with the bolts.
6-M4×10 hexagon socket head cap bolts with plain washers
Tightening torque 490 N·cm (50 kgf·cm)

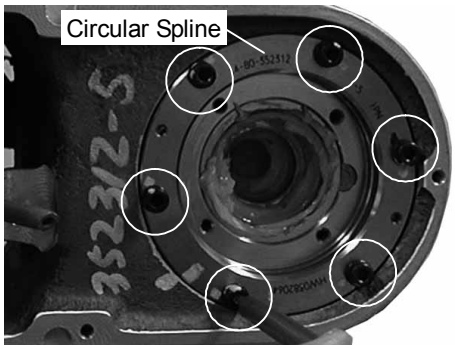

NOTE
- Wipe off any excess liquid gasket on other parts with a wiping cloth treated with alcohol.

(5) Fill the cup of the flexspline halfway with grease (4BNo2).

(6) Apply grease (4BNo2) to the waveform generator.

(7) Apply liquid gasket to the surface of the waveform generator plate where the bearing contacts.

Waveform Generator Plate

NOTE
- Wipe off any excess liquid gasket from other parts of the Manipulator with a wiping cloth treated with alcohol.

(8) Fit the waveform generator onto the waveform generator plate.

(9) Apply liquid gasket to the back of the waveform generator plate.

NOTE
- Make sure that no liquid gasket gets in the grease nipple holes.
- Wipe off any excess liquid gasket from other parts of the Manipulator with a wiping cloth treated with alcohol.

(10) Line up the groove on the waveform generator plate and the notch on the circular spline. Insert the waveform generator into the Manipulator. Fasten the waveform generator into place with the bolts.

4-M4×12 hexagon socket head cap bolts with plain washers

Tightening torque 280 N·cm (29 kgf·cm)

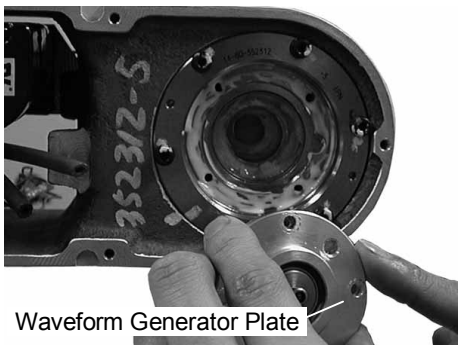

NOTE
- Position the waveform generator plate properly using the tram marks between the old waveform generator plate and circular spline.
- Manually rotate Arm #J5 to confirm that the reduction gear unit is properly installed. Secure the reduction gear unit in place.
- Wipe excess liquid gasket from other parts of the Manipulator with a wiping cloth treated with alcohol.

(11) Apply adhesive to the bolt and fasten the pulley to the reduction gear unit with the bolt.

1-M3×12 hexagon socket head cap bolt with disc spring washer

Tightening torque 245 N·cm (25 kgf·cm)

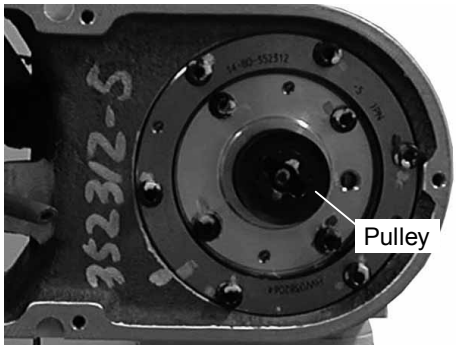

NOTE

- Grasp Arm #J5 while fastening the bolt with hexagonal wrench to prevent the pulley from turning.
- Wipe off any excess liquid gasket on other parts with a wiping cloth treated with alcohol.

(12) Attach the J5 motor, the J5 cover and the J6 cover following the installation steps (3) to (8) in the *Maintenance 8.1.3 How to Replace the Motor*.

8.3 Replacing the Timing Belt

WARNING	■ Before performing any replacement procedure, turn OFF the Controller and related equipment, and then pull out the power plug from the power source. Performing any replacement procedure with the power ON is extremely hazardous and may result in electric shock and/or malfunction of the robot system. ■ Do not insert or pull out the motor connectors while the power to the robot system is turned ON. Inserting or pulling out the motor connectors with the power ON is extremely hazardous and may result in serious bodily injury as the Manipulator may move abnormally, and also may result in electric shock and/or malfunction of the robot system. ■ Be sure to connect the AC power cable to a power receptacle. DO NOT connect it directly to a factory power source. To shut off power to the robot system, pull out the power plug from the power source. Performing any work while connecting the AC power cable to a factory power source is extremely hazardous and may result in electric shock and/or malfunction of the robot system.

CAUTION	■ Be careful not to apply excessive shock to the motor shaft during replacement procedures. The shock may shorten the life cycle of the motors and encoder and/or damage them. ■ Carefully use alcohol, liquid gasket, and adhesive following respective instructions and also instructions below. Careless use of alcohol, liquid gasket, or adhesive may cause a fire and/or safety problems. - Never put alcohol, liquid gasket, or adhesive close to fire. - Use alcohol, liquid gasket, or adhesive while ventilating the room. - Wear protective gear including a mask, protective goggles, and oil-resistant gloves. - If alcohol, liquid gasket, or adhesive gets on your skin, wash the area thoroughly with soap and water. - If alcohol, liquid gasket, or adhesive gets into your eyes or mouth, flush your eyes or wash out your mouth with clean water thoroughly, and then see a doctor immediately.

NOTE

- After parts have been replaced (motors, reduction gear units, timing belts, etc.), the Manipulator cannot perform positioning properly because a mismatch exists between the origin stored in each motor encoder and its corresponding origin stored in the Controller. After replacing the parts, it is necessary to match these origins.

The process of aligning the two origins is called “Calibration”.

Refer to *Maintenance 13. Calibration* and follow the steps that pertain to the software you are using to perform the calibration.

8.3.1 Type of Timing Belt

The type of the timing belt used in Arm #J5 is shown in the table below.
When ordering a timing belt for replacement, verify the arm number and the belt name. Then, specify the code from the table below.

Arm #	Belt name	Code	Note
J5	J5 timing belt	R13B030202	60S4.5M279 (length 279mm, width 6mm)

8.3.2 Location of Timing Belt

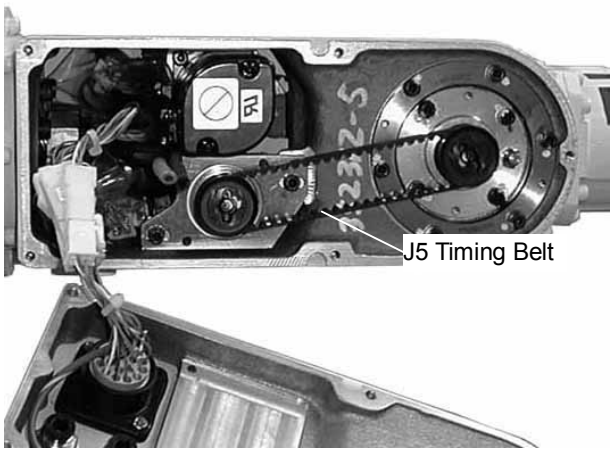

8.3.3 How to Replace the Timing Belt

Maintenance Parts and Tools

	Name	Quantity	Note
Maintenance Parts	J5 timing belt	1	R13B030202
	Liquid gasket (1206C)	Proper quantity	R13B031201
Tools	Hexagonal wrench	1 set	
	Flat blade screwdriver	1	
	Scraper	1	
	Torque wrench	1	
	Alcohol	Proper quantity	
	Wiping cloth	1	For wiping liquid gasket

Removal

(1) Remove the J5 cover.

Refer to the *Maintenance 3.8 J5 Cover* for details on removing the J5 cover.

(2) Remove the bolts from the motor plate. Pull the motor unit out so that it is leaning towards you and remove the J5 timing belt from the motor pulley and pulley.
2-M4×12 hexagon socket head cap bolts with plain washers

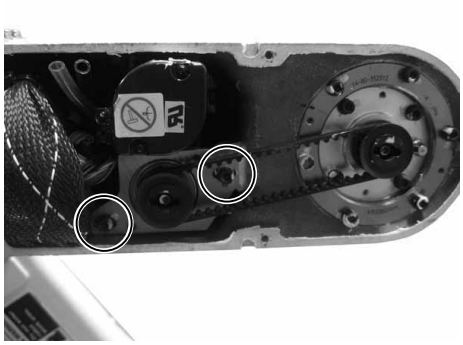

Installation

(1) Insert the motor unit to its original position in the Manipulator.

(2) Attach the J5 timing belt to the pulley and the motor pulley. Loosely fasten the motor plate with the bolts.
2-M4×12 hexagon socket head cap bolts with plain washers.

(3) Apply tension (26.5 N (2.7 kgf)) to the J5 timing belt. Securely fasten the motor plate that you loosely fastened in step (2) above.
Tightening torque 280 N·cm (29 kgf·cm)

(4) Attach the J5 cover.
Refer to the *Maintenance 3.8 J5 Cover* for details on how to attach the J5 cover.

9. Arm #J6

9.1 Replacing the Motor

WARNING	■ Before performing any replacement procedure, turn OFF the Controller and related equipment, and then pull out the power plug from the power source. Performing any replacement procedure with the power ON is extremely hazardous and may result in electric shock and/or malfunction of the robot system. ■ Do not insert or pull out the motor connectors while the power to the robot system is turned ON. Inserting or pulling out the motor connectors with the power ON is extremely hazardous and may result in serious bodily injury as the Manipulator may move abnormally, and also may result in electric shock and/or malfunction of the robot system. ■ Be sure to connect the AC power cable to a power receptacle. DO NOT connect it directly to a factory power source. To shut off power to the robot system, pull out the power plug from the power source. Performing any work while connecting the AC power cable to a factory power source is extremely hazardous and may result in electric shock and/or malfunction of the robot system.

CAUTION	■ Be careful not to apply excessive shock to the motor shaft during replacement procedures. The shock may shorten the life cycle of the motors and encoder and/or damage them. ■ Never disassemble the motor and encoder. A disassembled motor and encoder will cause a positional gap and cannot be used again. ■ Carefully use alcohol, liquid gasket, and adhesive following respective instructions and also instructions below. Careless use of alcohol, liquid gasket, or adhesive may cause a fire and/or safety problems. - Never put alcohol, liquid gasket, or adhesive close to fire. - Use alcohol, liquid gasket, or adhesive while ventilating the room. - Wear protective gear including a mask, protective goggles, and oil-resistant gloves. - If alcohol, liquid gasket, or adhesive gets on your skin, wash the area thoroughly with soap and water. - If alcohol, liquid gasket, or adhesive gets into your eyes or mouth, flush your eyes or wash out your mouth with clean water thoroughly, and then see a doctor immediately.

NOTE

- After parts have been replaced (motors, reduction gear units, timing belts, etc.), the Manipulator cannot perform positioning properly because a mismatch exists between the origin stored in each motor encoder and its corresponding origin stored in the Controller. After replacing the parts, it is necessary to match these origins.
  The process of aligning the two origins is called “Calibration”.
  Refer to *Maintenance 13. Calibration* and follow the steps that pertain to the software you are using to perform the calibration.

9.1.1 Type of Motor

The motor type used in Arm #J6 is shown in the table below.
When ordering a motor for replacement, verify the arm number. Then, specify the code from the table below.

Item	Arm #	Code	Note
AC servo motor 50W with brake	J6	R13B000604	50W

9.1.2 Location of Motor

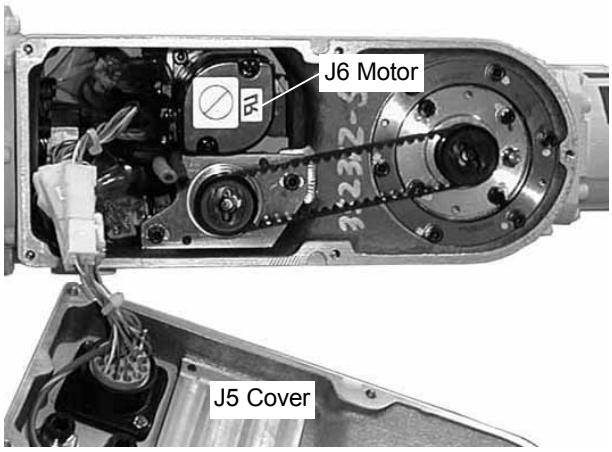

9.1.3 How to Replace the Motor

Maintenance Parts, Tools, and Material

	Name	Quantity	Note
Maintenance Parts	AC servo motor 50W with brake	1	R13B000604
	Liquid gasket (1206C)	Proper quantity	R13B031201
	Adhesive (Loctite 242)	Proper quantity	R13B031701
Tools	Hexagonal wrench	1 set	
	Flat blade screwsriver	1	
	Scraper	1	
	Nippers	1	
	Needle-nose pliers	1	
	Torque wrench	1	
	Alcohol	Proper quantity	
	Wiping cloth	2	For wiping adhesive For wiping liquid gasket
Material	Wire tie	6	

Removal

(1) Remove the J5 and J6 covers.

Refer to the *Maintenance 3.8 J5 Cover* for details on removing the J5 cover.

Refer to the *Maintenance 3.9 J6 Cover* for details on removing the J6 cover.

(2) Pull the power system connector pack (6 pin) to the J5 cover side and the signal system connector pack (4 pin) to the J6 cover side.

NOTE
- Cables are divided by system (power, signal) instead of by joint. Do not unplug the J5 (B) connectors by mistake. The arm position data will be lost and the arm will need to be calibrated again if the J5 (B) connectors are unplugged.

(3) Cut four wire ties that bind the two connector packs (power system, signal system) and remove two connector packs.

(4) Unplug the J6 (T) connectors for the power cable and the signal cable.

(5) Remove the bolts from the motor plate. Pull the motor unit out so that it is leaning towards you and remove the timing belt from the pulley and the motor pulley.
2-M4×12 hexagon socket head cap bolts with plain washers

(6) Remove the motor unit by pulling it towards you.

NOTE
- The power cable leads to the Arm #J5 side. Be careful not to damage the cable when removing the motor unit.


After Motor Unit Removal

(7) Remove the bolt with hexagonal wrench and then remove the motor pulley from the motor.
1-M3×12 hexagon socket head cap bolt with disc spring washer

NOTE
- Hold the motor pulley with needle-nose pliers while removing the bolt to prevent the motor pulley from turning.

(8) Make a tram mark between the motor and the motor plate.

(9) Remove the bolts and then remove the motor from the motor plate.
2-M4×12 hexagon socket head cap bolts with plain washers

Installation

NOTE
- Double-check the bolts to make sure that you have not forgotten to tighten any of them.

(1) Fasten the motor plate to the motor with the bolts.
2-M4×12 hexagon socket head cap bolts with plain washers
Tightening torque 280 N·cm (29 kgf·cm)

NOTE
- Position the motor properly using the tram marks from the old motor.

(2) Apply adhesive to the bolt and attach the motor pulley to the motor with the bolt.
1-M3×12 hexagon socket head cap bolt with disc spring washer
Tightening torque 245 N·cm (25 kgf·cm)

NOTE
- Hold the motor pulley with needle-nose pliers while tightening the bolt to prevent the motor pulley from turning.
- Wipe off any excess adhesive on other parts with a wiping cloth treated with alcohol.

(3) Place the motor unit into its original position. Attach the timing belt to the pulley and the motor pulley. Loosely fasten the motor plate with the bolts.
2-M4×12 hexagon socket head cap bolts with plain washers

(4) Apply tension (26.5 N (2.7 kgf)) to the timing belt. Securely fasten the motor plate that you loosely fastened in step (3) above.
Tightening torque 280 N·cm (29 kgf·cm)

(5) Connect the J6 power and signal cables.

(6) Cover the connectors with the four connector packs (power system, signal system) and bind the connector packs with two wire ties.

(7) Attach the J5 and J6 covers.

Refer to the *Maintenance 3.8 J5 Cover* for details on how to attach the J5 cover.

Refer to the *Maintenance 3.9 J6 Cover* for details on how to attach the J6 cover.

9.2 Replacing the Reduction Gear Unit

WARNING	■ Before performing any replacement procedure, turn OFF the Controller and related equipment, and then pull out the power plug from the power source. Performing any replacement procedure with the power ON is extremely hazardous and may result in electric shock and/or malfunction of the robot system. ■ Do not insert or pull out the motor connectors while the power to the robot system is turned ON. Inserting or pulling out the motor connectors with the power ON is extremely hazardous and may result in serious bodily injury as the Manipulator may move abnormally, and also may result in electric shock and/or malfunction of the robot system. ■ Be sure to connect the AC power cable to a power receptacle. DO NOT connect it directly to a factory power source. To shut off power to the robot system, pull out the power plug from the power source. Performing any work while connecting the AC power cable to a factory power source is extremely hazardous and may result in electric shock and/or malfunction of the robot system.

CAUTION	■ Be careful not to apply excessive shock to the motor shaft during replacement procedures. The shock may shorten the life cycle of the motors and encoder and/or damage them. ■ Carefully use alcohol, liquid gasket, and adhesive following respective instructions and also instructions below. Careless use of alcohol, liquid gasket, or adhesive may cause a fire and/or safety problems. - Never put alcohol, liquid gasket, or adhesive close to fire. - Use alcohol, liquid gasket, or adhesive while ventilating the room. - Wear protective gear including a mask, protective goggles, and oil-resistant gloves. - If alcohol, liquid gasket, or adhesive gets on your skin, wash the area thoroughly with soap and water. - If alcohol, liquid gasket, or adhesive gets into your eyes or mouth, flush your eyes or wash out your mouth with clean water thoroughly, and then see a doctor immediately. ■ Wear protective gear including a mask, protective goggles, and oil-resistant gloves during grease up. If grease gets into your eyes, mouth, or on your skin, follow the instructions below. If grease gets into your eyes : Flush them thoroughly with clean water, and then see a doctor immediately. If grease gets into your mouth : If swallowed, do not induce vomiting. See a doctor immediately. If grease just gets into your mouth, wash out your mouth with water thoroughly. If grease gets on your skin : Wash the area thoroughly with soap and water.

NOTE

- After parts have been replaced (motors, reduction gear units, timing belts, etc.), the Manipulator cannot perform positionig properly because a mismatch exists between the origin stored in each motor encoder and its corresponding origin stored in the Controller.
  After replacing the parts, it is necessary to match these origins.
  The process of aligning the two origins is called “Calibration”.
  Refer to *Maintenance 13. Calibration* and follow the steps that pertain to the software you are using to perform the calibration.

9.2.1 Type of Reduction Gear Unit

The type of the reduction gear unit used in Arm #J6 is shown in the table below.
When ordering a reduction gear unit for replacement, verify the arm number. Then, specify the code from the table below.

Item	Arm #	Code
J6 reduction gear unit	J6	R13B010007

9.2.2 Location of Reduction Gear Unit

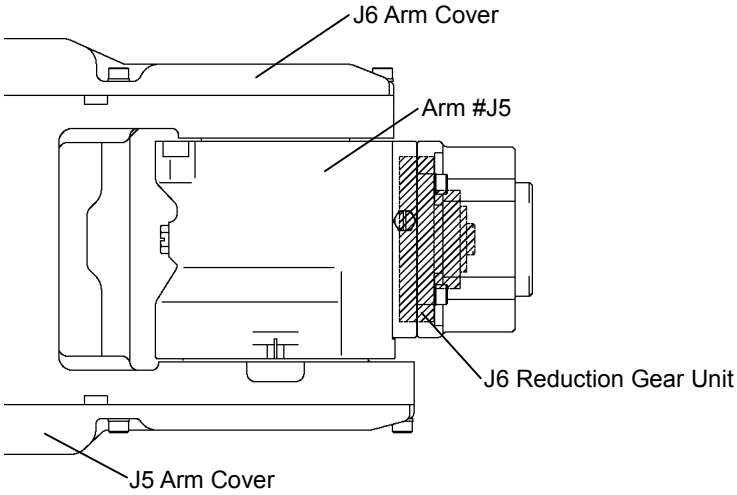

9.2.3 Structure of Reduction Gear Unit

A reduction gear unit consists of the waveform generator, flexspline, and circular spline. When replacing the reduction gear unit, be sure to always replace these parts all together as one set.

Refer to the *Maintenance 4.2.3 Structure of Reduction Gear Unit (Arm #J1)* for details.

9.2.4 How to Grease the Reduction Gear Unit

CAUTION	■ Wear protective gear including a mask, protective goggles, and oil-resistant gloves during grease up. If grease gets into your eyes, mouth, or on your skin, follow the instructions below. If grease gets into your eyes : Flush them thoroughly with clean water, and then see a doctor immediately. If grease gets into your mouth : If swallowed, do not induce vomiting. See a doctor immediately. If grease just gets into your mouth, wash out your mouth with water thoroughly. If grease gets on your skin : Wash the area thoroughly with soap and water.

When greasing the reduction gear unit, use only the grease specified for the reduction gear unit.
While greasing the reduction gear unit, be careful not to allow any foreign substances in the grease. The adequate quantities of grease are specified as follows:

Location for applying grease on J6 reduction gear unit	Grease quantity	Grease color	Code	Note
Teeth of the flexspline and the circular spline Waveform generator	6 g	Cream	R13B030302	4BNo2

Location for applying grease on the teeth of flexspline and circular spline and the waveform generator

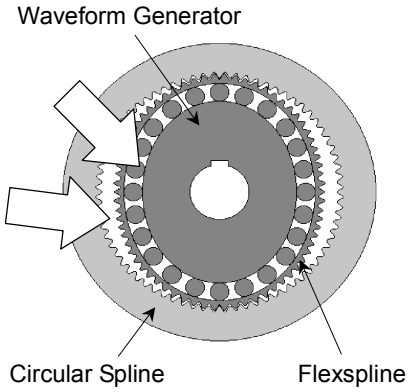

9.2.5 How to Replace the Reduction Gear Unit

Maintenance Parts, Tools, and Material

	Name	Quantity	Note
Maintenance Parts	J6 reduction gear unit	1	R13B010007
	Grease for reduction gear (4BNo2)	6 g	R13B030302
	Liquid gasket (1206C)	Proper quantity	R13B031201
	Adhesive (Loctite 242)	Proper quantity	R13B031701
	O-ring S63	1	For replacing O-ring R13B031204
Tools	Hexagonal wrench	1 set	
	Flat blade screwdriver	1	
	Scraper	1	
	Sharpening stone	1	
	Nippers	1	
	Needle-nose pliers	1	
	Cloth	1	Lint-free For wiping grease
	Threaded rod (M5)	2	For preventing the flexspline rotation
	Threaded rod (M4) for tap	2	
	Torque wrench	1	
	Alcohol	Proper quantity	
	Wiping cloth	2	For wiping liquid gasket For wiping adhesive
Material	Wire tie	6	

Removal

NOTE

- Turn Arm #6 so that its flange faces up.
  If the flange is not facing up, the grease inside the flexspline may leak out when the J6 casing is removed.

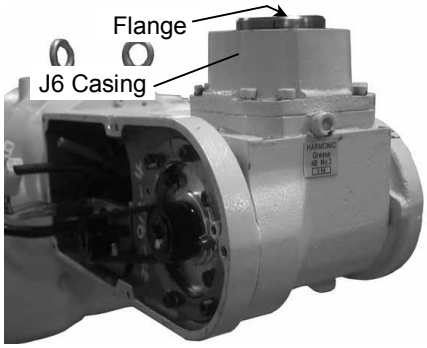

(1) Remove the timing belt from the pulley following the removal steps (1) to (5) in the *Maintenance 9.1.3 How to Replace the Motor*.

(2) Make a tram mark between the J6 casing, the circular spline, and the gearbox.

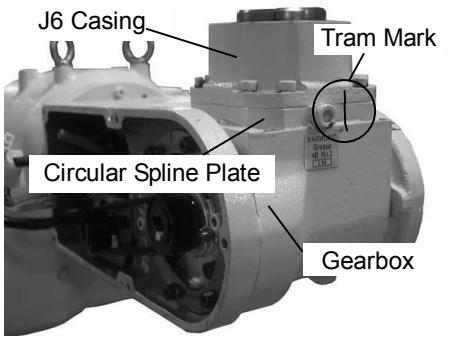

(3) Remove the bolts. Pull the J6 casing away from the Manipulator.
4-M4×50 hexagon socket head cap bolts with disc spring washers

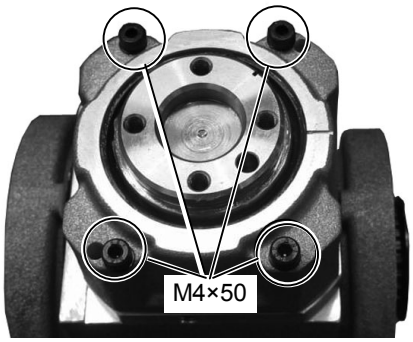

(4) Wipe the grease off the flexspline.
(Use a lint-free cloth that will not leave any fibers behind.)

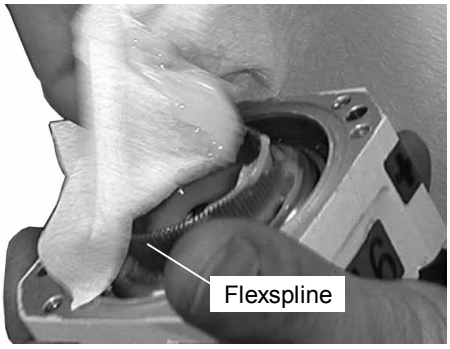

(5) Remove the bolts with hexagonal wrench and then remove the flexspline from the J6 casing.
6-M4×18 hexagon socket head cap bolts with disc spring washers

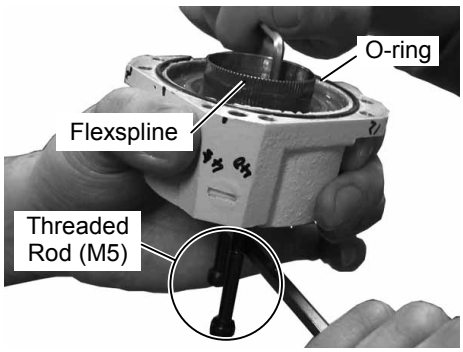

NOTE

- In order to prevent the flexspline from turning, screw two threaded rods (M5) into the flange. Hold the threaded rods while removing the bolts with hexagonal wrench.
- Be careful not to lose the O-ring on the J6 casing.

(6) Remove the flexspline cap from the flexspline.

NOTE

- Attach the flexspline cap to the flexspline of the new reduction gear unit.
  Do not discard the flexspline cap along with the reduction gear unit.

Flexspline Cap

(7) Screw two threaded rods (M4) into taps. Remove the circular spline plate from the Manipulator.

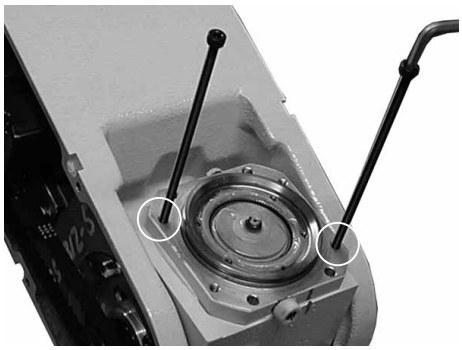

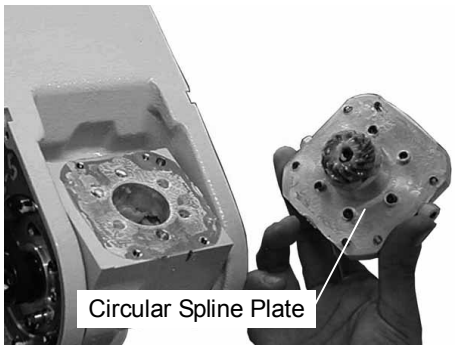

(8) Make a tram mark between the circular spline and the circular spline plate.

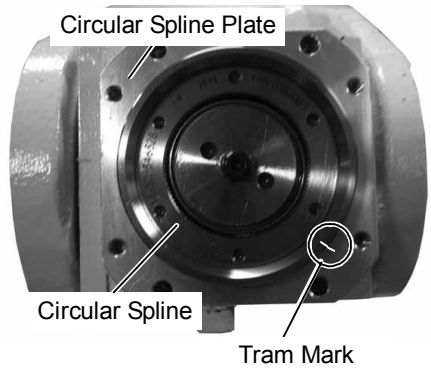

(9) Remove the bolts located around the spiral bevel gear and then remove the circular spline from the circular spline plate.

6-M3×10 hexagon socket head cap bolts with disc spring washers

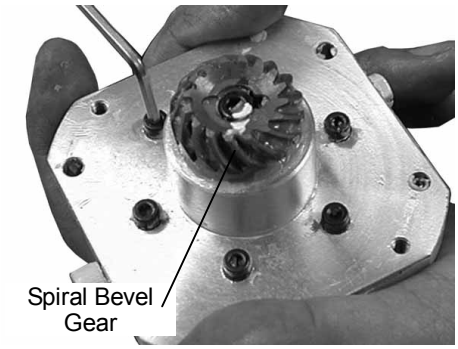

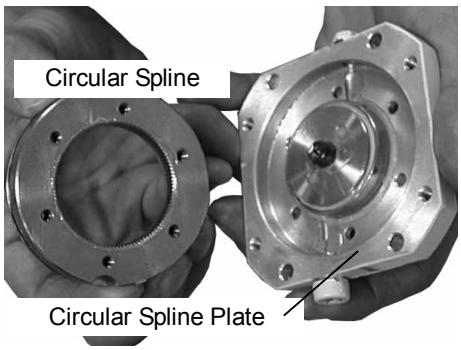

(10) Remove the bolt with hexagonal wrench and then remove the waveform generator from the circular spline plate.

1-M4×12 hexagon socket head cap bolt with disc spring washer

NOTE

- Hold the waveform generator with needle-nose pliers while removing the bolt to prevent the waveform generator from turning.

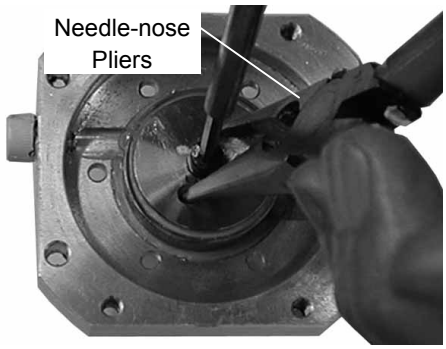

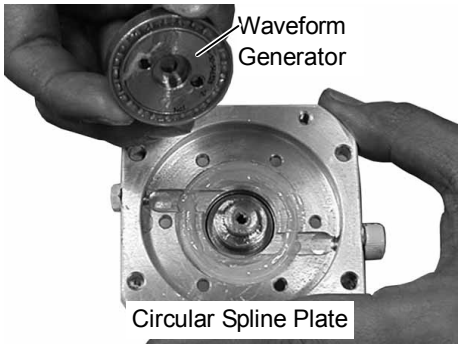

(11) Remove caked-on liquid gasket residue with a scraper or similar tool.

(12) Repair scratches incurred during tap use with a sharpening stone or similar tool.

Installation

NOTE

- Double-check the bolts to make sure that you have not forgotten to tighten any of them.

Disassembled J6 casing

(1) Apply grease (4BNo2) to the teeth of the flexspline and circular spline. Refer to the *Maintenance 9.2.4 How to Grease the Reduction Gear Unit* for details.

(2) Apply grease (4BNo2) to the waveform generator until the ball bearings of the waveform generator are covered. Refer to the *Maintenance 9.2.4 How to Grease the Reduction Gear Unit* for details.

(3) Attach the waveform generator to the circular spline plate so that the imprinted surface of the waveform generator faces down. Apply adhesive to the bolt and fasten the waveform generator into place with the bolt.

1-M4×12 hexagon socket head cap bolt with disc spring washer

Tightening torque 490 N·cm (50 kgf·cm)

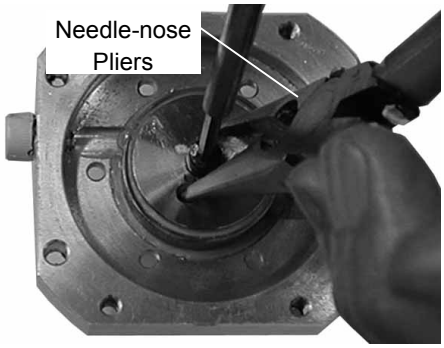

NOTE

- Hold the waveform generator with needle-nose pliers while tightening the bolt to prevent the waveform generator from turning.
- Wipe off any excess adhesive on other parts with a wiping cloth treated with alcohol.

(4) Attach the circular spline to the circular spline plate so that the imprinted surface of the circular spline faces up. Fasten the waveform generator into place with the bolts in the spiral bevel gear side.

6-M3×10 hexagon socket head cap bolts with disc spring washers

Tightening torque 245 N·cm (25 kgf·cm)

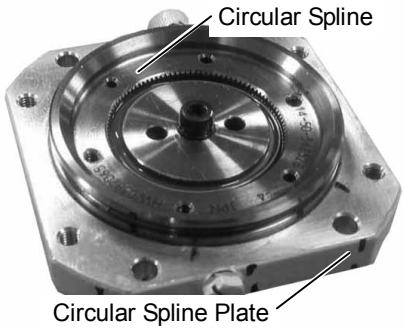

NOTE

- Position the circular spline properly using the tram marks on the old circular spline.

(5) Attach the flexspline cap to the flexspline.

(6) Apply liquid gasket to the boss protrusion (side) of the flexspline cap.

NOTE
- Wipe off any excess liquid gasket on other parts with a wiping cloth treated with alcohol.

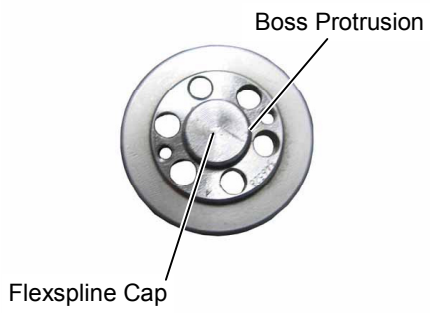

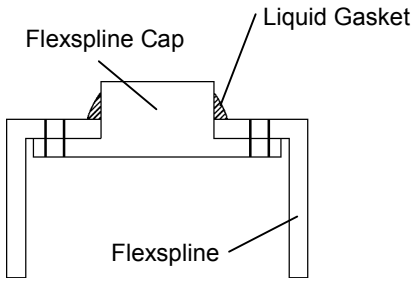

(7) Fasten the flexspline to the J6 casing with the bolts.
6-M4×18 hexagon socket head cap bolts with disc spring washers
Tightening torque 490 N·cm (50 kgf·cm)

NOTE
- In order to prevent the flexspline from turning, screw two threaded rods (M5) into the flange. Hold long screws while fastening the bolts with hexagonal wrench.

(8) Remove the O-ring from the J6 casing. Verify that no damage and/or residue caked onto the O-ring to prevent oil leakage. Replace with a new O-ring if lost or damaged. Remove residues if they exist.

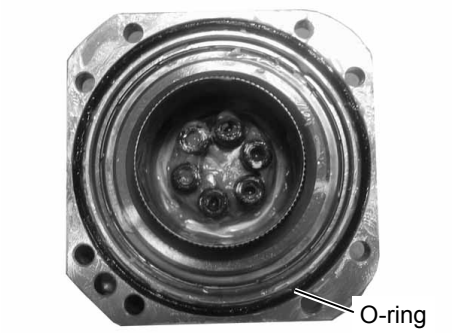

(9) Apply liquid gasket to the O-ring groove. Fit the O-ring into the groove. If it is hard to fit the O-ring into the groove, put it on from the outside when attaching the J6 casing as detailed in step (12).

NOTE
- Wipe off any excess liquid gasket from other parts of the Manipulator with a wiping cloth treated with alcohol.

(10) Apply liquid gasket to the surfaces of the gearbox and circular spline that make contact with each other. Insert the circular spline plate into the Manipulator.

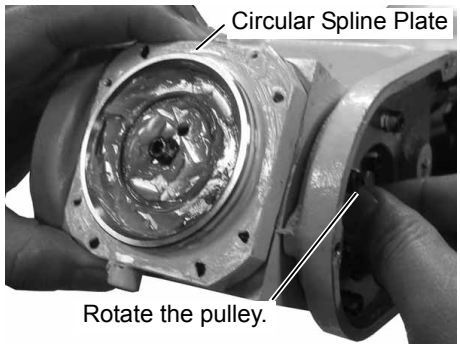

NOTE

- Match the tram marks on the Manipulator and the circular spline plate.
- After inserting the circular spine plate, rotate the pulley as shown in the photograph to verify that the gears fit together properly.
- Wipe off any excess liquid gasket from other parts of the Manipulator with a wiping cloth treated with alcohol.

(11) Fill the cup of the flexspline halfway with grease (4BNo2).

(12) Fasten the J6 casing and the circular spline plate with the bolts.

4-M4×50 hexagon socket head cap bolts with disc spring washers

Tightening torque 280 N·cm (29 kgf·cm)

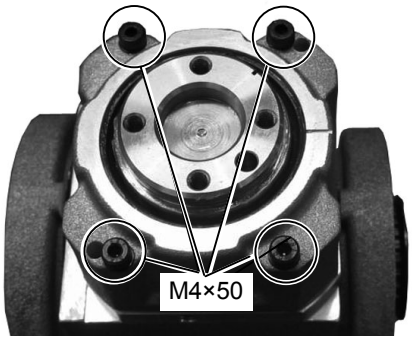

NOTE

- Match the tram marks on the J6 casing and the circular spline plate.
- Fasten the J6 casing and circular spline plate into place while manually rotating the input axis to ensure that the components of the reduction gear unit fit together properly.

(13) Attach the J6 motor, the J5 cover, and the J6 cover following the installation steps (3) to (7) in the *Maintenance 9.1.3 How to Replace the Motor*.

9.3 Replacing the Bearing

WARNING	■ Before performing any replacement procedure, turn OFF the Controller and related equipment, and then pull out the power plug from the power source. Performing any replacement procedure with the power ON is extremely hazardous and may result in electric shock and/or malfunction of the robot system. ■ Do not insert or pull out the motor connectors while the power to the robot system is turned ON. Inserting or pulling out the motor connectors with the power ON is extremely hazardous and may result in serious bodily injury as the Manipulator may move abnormally, and also may result in electric shock and/or malfunction of the robot system. ■ Be sure to connect the AC power cable to a power receptacle. DO NOT connect it directly to a factory power source. To shut off power to the robot system, pull out the power plug from the power source. Performing any work while connecting the AC power cable to a factory power source is extremely hazardous and may result in electric shock and/or malfunction of the robot system.

CAUTION	■ Be careful not to apply excessive shock to the motor shaft during replacement procedures. The shock may shorten the life cycle of the motors and encoder and/or damage them. ■ Carefully use alcohol, liquid gasket, and adhesive following respective instructions and also instructions below. Careless use of alcohol, liquid gasket, or adhesive may cause a fire and/or safety problems. - Never put alcohol, liquid gasket, or adhesive close to fire. - Use alcohol, liquid gasket, or adhesive while ventilating the room. - Wear protective gear including a mask, protective goggles, and oil-resistant gloves. - If alcohol, liquid gasket, or adhesive gets on your skin, wash the area thoroughly with soap and water. - If alcohol, liquid gasket, or adhesive gets into your eyes or mouth, flush your eyes or wash out your mouth with clean water thoroughly, and then see a doctor immediately.

Maintenance Parts, Tools, and Material

	Name	Quantity	Note
Maintenance Parts	Grease for reduction gear (4BNo2)	1 g	R13B030302
	Liquid gasket (1206C)	Proper quantity	R13B031201
	J6 bearing	1	R13B030801
	Adhesive (Loctite 242)	Proper quantity	R13B031701
Tools	Hexagonal wrench	1 set	
	Flat blade screwdriver	1	
	Scraper	1	
	Nippers	1	
	Cloth	1	Lint-free For wiping grease
	Threaded rod (M5)	2	For preventing the flexspline rotation
	Threaded rod (M4) for tap	2	
	Torque wrench	1	
	Alcohol	Proper quantity	
	Wiping cloth	2	For wiping liquid gasket For wiping adhesive
Material	Wire tie	6	

Removal

NOTE ☞ - Turn Arm #J6 so that its flange faces up.
If the flange is not facing up, the grease inside the flexspline may leak out when the J6 casing is removed.

(1) Remove the J6 casing from the flexspline following the removal steps (1) to (5) in the *Maintenance 9.2.5 How to Replace the Reduction Gear Unit*.

J6 Casing

Flexspline

(2) Remove the J6 bearing.
If the J6 bearing is hard to remove, screw two threaded rods (M4) into the taps before pulling the J6 bearing out.

J6 Bearing

Installation

(1) Attach the J6 bearing.

(2) Attach the flexspline, the J6 casing, the circular spline plate, the motor and the cover following the installation steps (7) to (13) in the *Maintenance 9.2.5 How to Replace the Reduction Gear Unit*.

9.4 Replacing the Oil Seal

WARNING	■ Before performing any replacement procedure, turn OFF the Controller and related equipment, and then pull out the power plug from the power source. Performing any replacement procedure with the power ON is extremely hazardous and may result in electric shock and/or malfunction of the robot system. ■ Do not insert or pull out the motor connectors while the power to the robot system is turned ON. Inserting or pulling out the motor connectors with the power ON is extremely hazardous and may result in serious bodily injury as the Manipulator may move abnormally, and also may result in electric shock and/or malfunction of the robot system. ■ Be sure to connect the AC power cable to a power receptacle. DO NOT connect it directly to a factory power source. To shut off power to the robot system, pull out the power plug from the power source. Performing any work while connecting the AC power cable to a factory power source is extremely hazardous and may result in electric shock and/or malfunction of the robot system.

CAUTION	■ Be careful not to apply excessive shock to the motor shaft during replacement procedures. The shock may shorten the life cycle of the motors and encoder and/or damage them. ■ Carefully use alcohol, liquid gasket, and adhesive following respective instructions and also instructions below. Careless use of alcohol, liquid gasket, or adhesive may cause a fire and/or safety problems. - Never put alcohol, liquid gasket, or adhesive close to fire. - Use alcohol, liquid gasket, or adhesive while ventilating the room. - Wear protective gear including a mask, protective goggles, and oil-resistant gloves. - If alcohol, liquid gasket, or adhesive gets on your skin, wash the area thoroughly with soap and water. - If alcohol, liquid gasket, or adhesive gets into your eyes or mouth, flush your eyes or wash out your mouth with clean water thoroughly, and then see a doctor immediately. ■ Wear protective gear including a mask, protective goggles, and oil-resistant gloves during grease up. If grease gets into your eyes, mouth, or on your skin, follow the instructions below. If grease gets into your eyes : Flush them thoroughly with clean water, and then see a doctor immediately. If grease gets into your mouth : If swallowed, do not induce vomiting. See a doctor immediately. If grease just gets into your mouth, wash out your mouth with water thoroughly. If grease gets on your skin : Wash the area thoroughly with soap and water.

Maintenance Parts, Tools, and Material

	Name	Quantity	Note
Maintenance Parts	Liquid gasket (1206C)	Proper quantity	R13B031201
	J6 oil seal	1	R13B031203
	Grease (SRL)	Proper quantity	R13B030303
Tools	Hexagonal wrench	1 set	
	Flat blade screwdriver	1	
	Scraper	1	
	Nippers	1	
	Torque wrench	1	
	Alcohol	Proper quantity	
	Wiping cloth	2	For wiping liquid gasket For wiping adhesive
Material	Wire tie	6	

Removal

NOTE

- Turn Arm #J6 so that its flange faces up.
  If the flange is not facing up, the grease inside the flexspline may leak out when the J6 casing is removed.

(1) Remove the J6 casing from the Manipulator following the removal steps (1) to (3) in the *Maintenance 9.2.5 How to Replace the Reduction Gear Unit*.

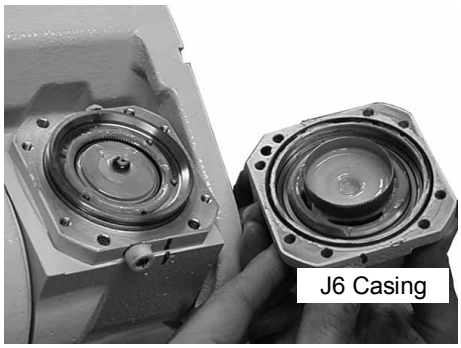

(2) Remove the flexspline, the J6 bearing, and the end effector unit by pressing them through from the end effector side to the flexspline side.

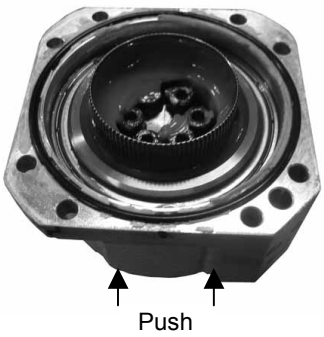

(3) Dislodge and remove the J6 oil seal from the side opposite the oil reservoir with a flat blade screwdriver or similar tool.

Installation

(1) Apply grease (SRL) to the contact zone of the motor shaft and a new oil seal.

(2) Attach the J6 oil seal to the J6 casing so that the oil reservoir is on the reduction gear unit side.

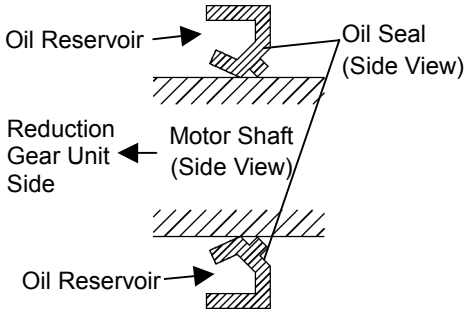

(3) Attach the flexspline, the J6 bearings, and the end effector unit to the J6 casing.

(4) Attach a new J6 casing, the motor and the cover following the installation steps (12) to (13) in the *Maintenance 9.2.5 How to Replace the Reduction Gear Unit*.

9.5 Replacing the Timing Belt

WARNING	■ Before performing any replacement procedure, turn OFF the Controller and related equipment, and then pull out the power plug from the power source. Performing any replacement procedure with the power ON is extremely hazardous and may result in electric shock and/or malfunction of the robot system. ■ Do not insert or pull out the motor connectors while the power to the robot system is turned ON. Inserting or pulling out the motor connectors with the power ON is extremely hazardous and may result in serious bodily injury as the Manipulator may move abnormally, and also may result in electric shock and/or malfunction of the robot system. ■ Be sure to connect the AC power cable to a power receptacle. DO NOT connect it directly to a factory power source. To shut off power to the robot system, pull out the power plug from the power source. Performing any work while connecting the AC power cable to a factory power source is extremely hazardous and may result in electric shock and/or malfunction of the robot system.

CAUTION	■ Be careful not to apply excessive shock to the motor shaft during replacement procedures. The shock may shorten the life cycle of the motors and encoder and/or damage them. ■ Carefully use alcohol, liquid gasket, and adhesive following respective instructions and also instructions below. Careless use of alcohol, liquid gasket, or adhesive may cause a fire and/or safety problems. - Never put alcohol, liquid gasket, or adhesive close to fire. - Use alcohol, liquid gasket, or adhesive while ventilating the room. - Wear protective gear including a mask, protective goggles, and oil-resistant gloves. - If alcohol, liquid gasket, or adhesive gets on your skin, wash the area thoroughly with soap and water. - If alcohol, liquid gasket, or adhesive gets into your eyes or mouth, flush your eyes or wash out your mouth with clean water thoroughly, and then see a doctor immediately.

NOTE

- After parts have been replaced (motors, reduction gear units, timing belts, etc.), the Manipulator cannot perform positionig properly because a mismatch exists between the origin stored in each motor encoder and its corresponding origin stored in the Controller.
  After replacing the parts, it is necessary to match these origins.
  The process of aligning the two origins is called “Calibration”.
  Refer to *Maintenance 13. Calibration* and follow the steps that pertain to the software you are using to perform the calibration.

9.5.1 Type of Timing Belt

The type of the timing belt used in Arm #J6 is shown in the table below.
When ordering a timing belt for replacement, verify the arm number and the belt name.
Then, specify the code from the table below.

Arm #	Belt name	Code	Note
J6	J6 timing belt	R13B030203	60S4.5M297 (length 297 mm, width 6 mm)

9.5.2 Location of Timing Belt

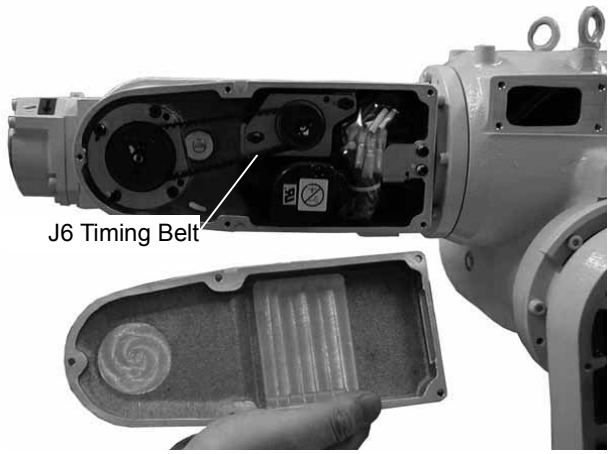

9.5.3 How to Replace the Timing Belt

Maintenance Parts and Tools

	Name	Quantity	Note
Maintenance Parts	J6 timing belt	1	R13B030203
	Liquid gasket (1206C)	Proper quantity	R13B031201
Tools	Hexagonal wrench	1 set	
	Flat blade screwdriver	1	
	Scraper	1	
	Torque wrench	1	
	Alcohol	Proper quantity	
	Wiping cloth	1	For wiping liquid gasket

Removal

(1) Remove the J6 cover.

Refer to the *Maintenance 3.9 J6 Cover* for details on removing the J6 cover.

(2) Remove the bolts from the motor plate. Pull the motor unit out so that it is leaning towards you and remove the J6 timing belt from the pulley and motor pulley.
2-M4×12 hexagon socket head cap bolts with plain washers

Installation

(1) Insert the motor unit to its original position in the Manipulator.

(2) Attach the J6 timing belt to the pulley and the motor pulley. Loosely fasten the motor plate with the bolts.
2-M4×12 hexagon socket head cap bolts with plain washers

(3) Apply tension (26.5 N (2.7 kgf)) to the J6 timing belt. Securely fasten the motor plate that you loosely fastened in step (2) above.
Tightening torque 280 N·cm (29 kgf·cm)

(4) Attach the J6 cover.

Refer to the *Maintenance 3.9 J6 Cover* for details on how to attach the J6 cover.

10. Replacing the Cable Unit

WARNING	■ Before performing any replacement procedure, turn OFF the Controller and related equipment, and then pull out the power plug from the power source. Performing any replacement procedure with the power ON is extremely hazardous and may result in electric shock and/or malfunction of the robot system. ■ Do not insert or pull out the motor connectors while the power to the robot system is turned ON. Inserting or pulling out the motor connectors with the power ON is extremely hazardous and may result in serious bodily injury as the Manipulator may move abnormally, and also may result in electric shock and/or malfunction of the robot system. ■ Be sure to connect the AC power cable to a power receptacle. DO NOT connect it directly to a factory power source. To shut off power to the robot system, pull out the power plug from the power source. Performing any work while connecting the AC power cable to a factory power source is extremely hazardous and may result in electric shock and/or malfunction of the robot system. ■ Be careful not to get any foreign substances in the Manipulator, connectors, and pins during maintenance. Turning ON the power to the robot system when any foreign substances exist in them is extremely hazardous and may result in electric shock and/or malfunction of the robot system. ■ Be sure to connect the cables properly. Do not allow unnecessary strain on the cables. (Do not put heavy objects on the cables. Do not bend or pull the cables forcibly.) The unnecessary strain on the cables may result in damage to the cables, disconnection, and/or contact failure. Damaged cables, disconnection, or contact failure is extremely hazardous and may result in electric shock and/or improper function of the robot system.

10.1 Before Replacing the Cable Unit

The arm position data will be lost if the power and signal connectors are unplugged. Connect a battery to the battery port on each motor when replacing cables.

10.2 How to Replace the Cable Unit

WARNING	■ When installing the cover, be careful not to allow the cables to interfere with the cover mounting and do not bend these cables forcibly to push them into the cover. Unnecessary strain on cables may result in damage to the cables, disconnection, and/or contact failure. Damaged cables, disconnection, or contact failure is extremely hazardous and may result in electric shock and/or improper function of the robot system. When routing the cables, observe the cable locations after removing the cover. Be sure to place the cables back to their original locations.

WARNING	■ Be sure to connect the cables properly. Do not allow unnecessary strain on the cables. (Do not put heavy objects on the cables. Do not bend or pull the cables forcibly.) The unnecessary strain on the cables may result in damage to the cables, disconnection, and/or contact failure. Damaged cables, disconnection, or contact failure is extremely hazardous and may result in electric shock and/or improper function of the robot system.

CAUTION	■ When disconnecting the connectors during the replacement of the cable unit, be sure to reconnect the connectors to their proper positions. Improper connection of the connectors may result in improper function of the robot system. For details on the connections, refer to the *Maintenance 10.3 Connector Pin Assignments.* ■ Carefully use alcohol, liquid gasket, and adhesive following respective instructions and also instructions below. Careless use of alcohol, liquid gasket, or adhesive may cause a fire and/or safety problems. - Never put alcohol, liquid gasket, or adhesive close to fire. - Use alcohol, liquid gasket, or adhesive while ventilating the room. - Wear protective gear including a mask, protective goggles, and oil-resistant gloves. - If alcohol, liquid gasket, or adhesive gets on your skin, wash the area thoroughly with soap and water. - If alcohol, liquid gasket, or adhesive gets into your eyes or mouth, flush your eyes or wash out your mouth with clean water thoroughly, and then see a doctor immediately. ■ Wear protective gear including a mask, protective goggles, and oil-resistant gloves during grease up. If grease gets into your eyes, mouth, or on your skin, follow the instructions below. If grease gets into your eyes : Flush them thoroughly with clean water, and then see a doctor immediately. If grease gets into your mouth : If swallowed, do not induce vomiting. See a doctor immediately. If grease just gets into your mouth, wash out your mouth with water thoroughly. If grease gets on your skin : Wash the area thoroughly with soap and water.

Maintenance Parts, Tools, and Material

	Name	Quantity	Note
Maintenance Parts	Grease (Multemp)	Proper quantity	R13B030301
	Liquid gasket (1206C)	Proper quantity	R13B031201
	Cable unit	1	R13B020003
	Battery for backung up motor encoder *	6	For J1, J2, J3, J4, J5, J6 R13B060002
Tools	Hexagonal wrench	1 set	
	Flat blade screwdriver	1	
	Scraper	1	
	Nippers	1	
	Cross-point screwdriver	1	
	Brush	1	For applying grease
	Alcohol	Proper quantity	
	Wiping cloth	1	For wiping liquid gasket
Material	Wire tie	22	

* The battery for backing up motor encoder is only used for retaining the motor position data during maintenance (cable replacement, etc.). It is not used for the Manipulator itself.

Removal

(1) Return the Manipulator to the origin position (0 pulse position).

(2) Remove the covers listed below.

J6 cover	Cable guide cover	J2 arm cover
J5 cover	Upper casing cover	J1 cover

Refer to the *Maintenance 3. Removing and Installing the Covers* for details on removing covers.

(3) Cut the 12 wire ties that bind six connector packs (power system, signal system) for the J1, J2, J3, J4, J5, and J6 motors.

(4) Move the six connector packs away from the connectors.

(5) Connect the batteries for backing up J1, J2, J3, J4, J5, and J6 motor encoders to the BAT and OBT connectors on each motor.

NOTE

- If you unplug the power cable and signal cable without connecting the batteries for backing up motor encoders, the position data in motors will be lost and the arms will need to be calibrated again.

(6) Unplug the J1 (S), J2 (L), J3 (U), J4 (R), J5 (B), and J6 (T) power cable and signal cable connectors.

(7) Pull out the six connector packs.

(8) Remove the bolts. Then remove the clamp hardware located on the interior of the wrist from the Manipulator.
2-M4×10 hexagon socket head cap bolts with plain washers

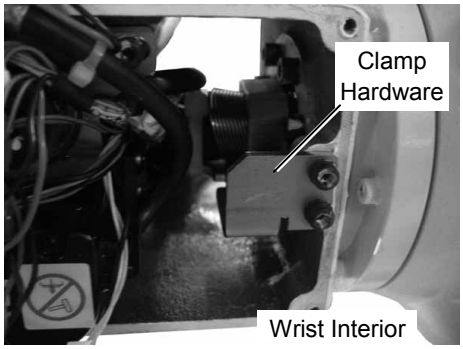

(9) Cut the wire tie that binds the cables inside the wrist and pull the clamp hardware out.

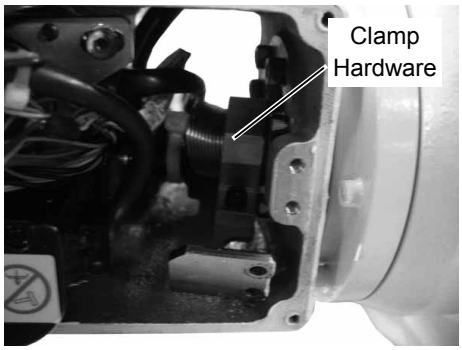

(10) Remove the bolts. Then remove the clamp hardware located on the interior of the wrist from the cables.
2-M4×16 hexagon socket head cap bolts with plain washers

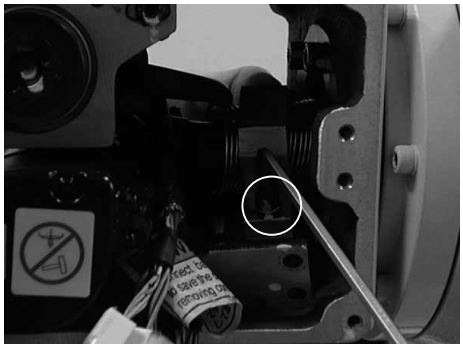

(12) Remove the bolts. Then remove the upper clamp hardware located inside the upper casing. (The upper clamp hardware and the motor plate are secured with the same bolts.)
2-M4×16 hexagon socket head cap bolts with plain washers

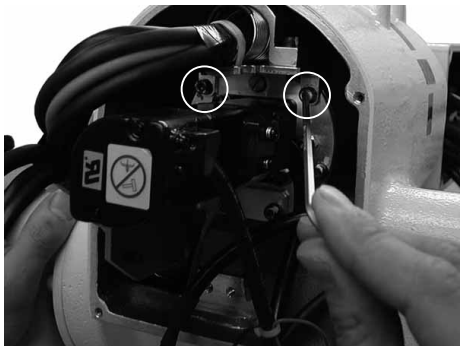

(13) Cut the two wire ties that bind the upper clamp hardware.

(14) Remove the bolts. Then pull the upper clamp hardware towards you and remove it from the cables.
2-M4×16 hexagon socket head cap bolts with plain washers

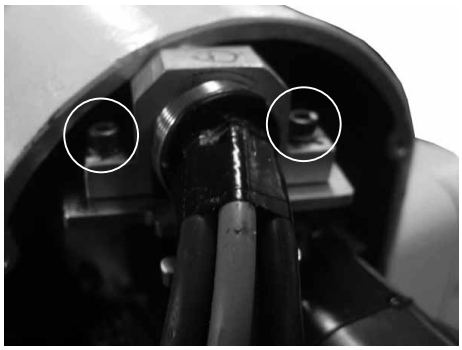

(15) Remove the bolts. Then remove the left clamp hardware located inside the upper casing. (The left clamp hardware and the motor plate are secured with the same bolts.)
2-M4×16 hexagon socket head cap bolts with plain washers

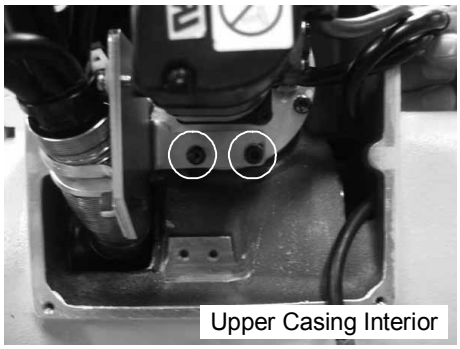
Upper Casing Interior

(16) Cut the wire tie that binds the left clamp hardware located inside the upper casing.

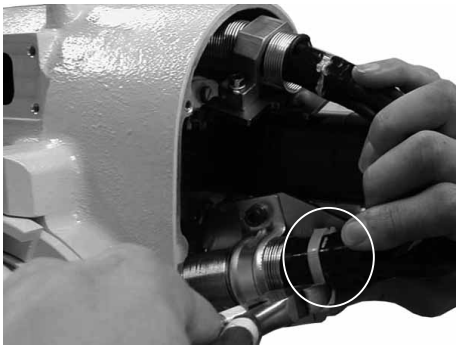

(17) Remove the bolts. Then pull the left clamp hardware towards you and remove it from the cables.
2-M5×10 hexagon socket head cap bolts with 2 plain washers

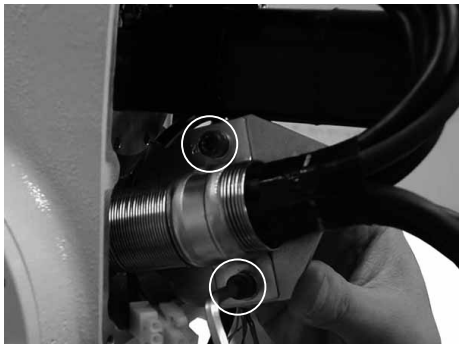

(18) Pull out the cables through the wrist side to the upper casing side.

NOTE
- Bundle cables when pulling them out to prevent damage.

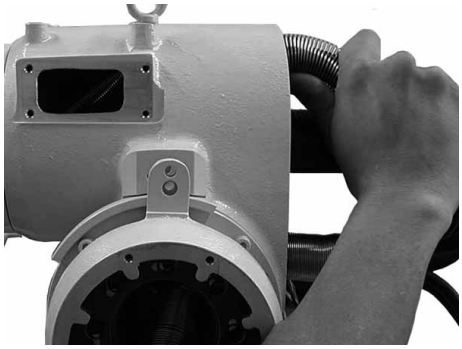

(19) Remove the bolts. Then remove the upper clamp hardware located inside Arm #J2.

2-M5×10 hexagon socket head cap bolts with 2 plain washers

(20) Remove the bolts. Then remove the lower clamp hardware located inside Arm #J2.

2-M5×10 hexagon socket head cap bolts with 2 plain washers

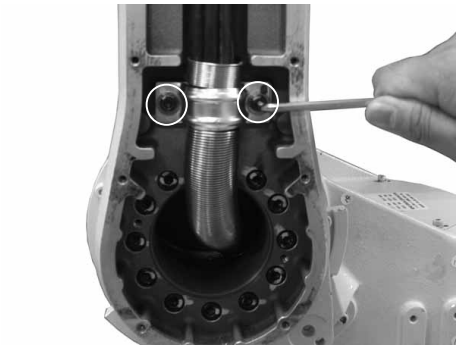

(21) Cut the wire tie located inside Arm #J2.

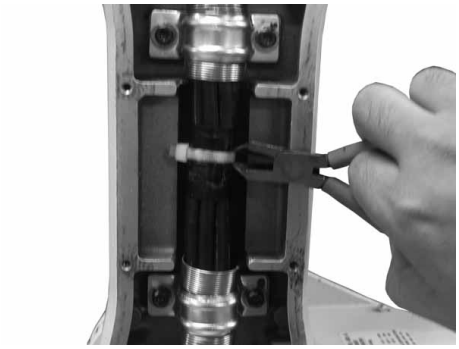

(22) Pull the cables through the upper casing side to the Arm #J2 side.

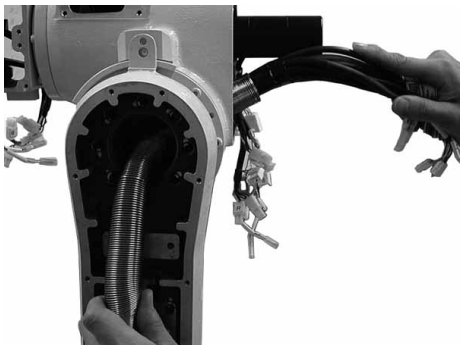

(23) From the Arm #J1 side, remove the bolts that secure the left clamp hardware inside Arm #J1.

2-M4×16 hexagon socket head cap bolts with plain washers

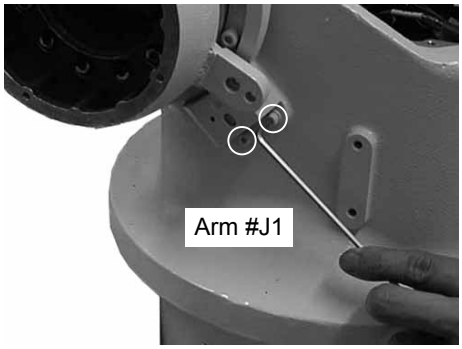

(24) Cut the wire tie that binds the left clamp hardware inside Arm #J1.

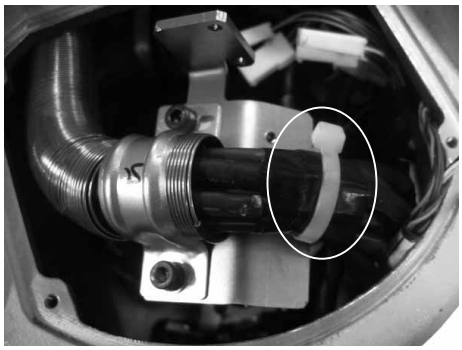

(25) Remove the bolts. Then remove the left clamp hardware (arch and clamp) from the cables.

2-M5×10 hexagon socket head cap bolts with 2 plain washers

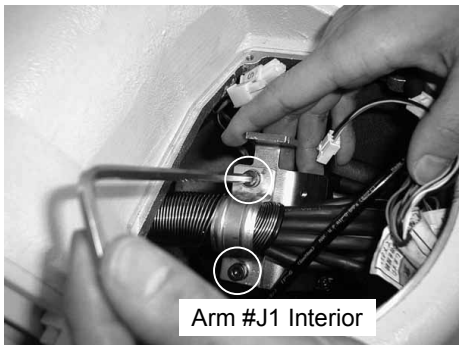

(26) Remove the bolts. Then remove the lower clamp hardware (one each on the right and left sides) located inside Arm #J1.

4-M4×12 hexagon socket head cap bolts with plain washers

(27) Cut the wire ties that bind the lower clamp hardware (one each on the right and left sides).

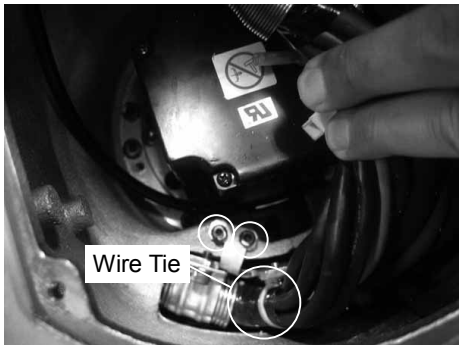

(28) Remove the bolts. Then stretch the springs located in the lower clamp hardware (one each on the right and left sides) until they reach the top of Arm #J1. Remove the two pieces of the lower clamp hardware from the cables.

4-M5×10 hexagon socket head cap bolts with 2 plain washers

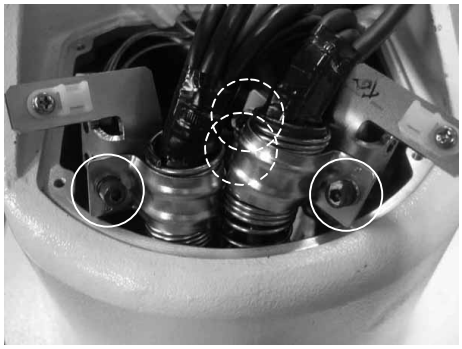

(29) Remove the screws and then lift out the connector plate and its cable unit as shown in the photograph.

6-M4×8 mounting screws for connector plate with spring washers

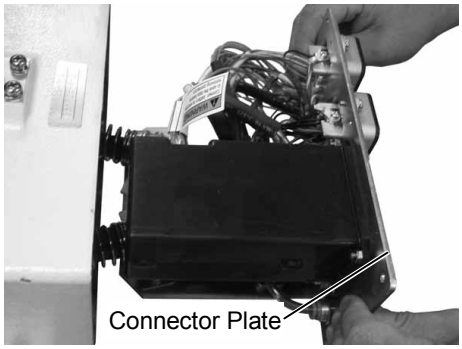

Installation

NOTE
- Double-check the bolts to make sure that you have not forgotten to tighten any of them.

(1) Apply grease (Multemp) to the cable storage area and protective metal coil of the J1 base in order to lubricate the protective metal coil on the U-shaped part of the cable unit.

NOTE
- Apply grease with a brush to the area beginning with the connector plate side and ending with the inside of the base.

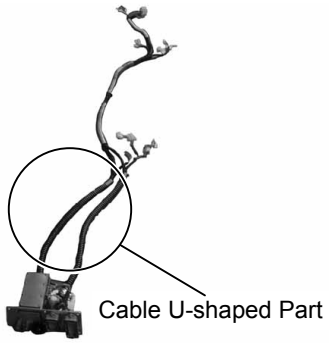

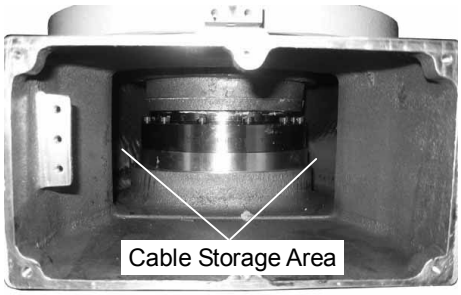

J1 Base Interior

(2) Pass the cable unit from the connector plate side to the interior of Arm #J1 and then through to the Arm #J2 side.

NOTE
- Pull the cable until the second spring from the plate side can be barely seen on the inside of Arm #J1.
- Put the cable in the storage area on the J1 base so that it is coiled in a U shape.

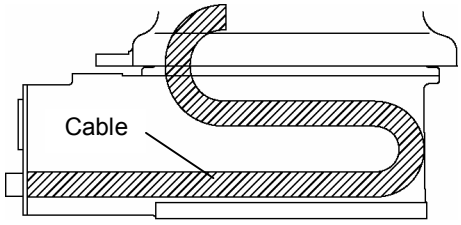

(3) Loosely fasten the connector plate with the screws.
6-M4×8 mounting screws for connector plate with spring washers

(4) Attach the lower clamp hardware (one each on the right and left sides) to the cables inside Arm #J1 with the bolts.
Bind the lower clamp hardware and the cables with the wire ties.
4-M5×10 hexagon socket head cap bolts with 2 plain washers

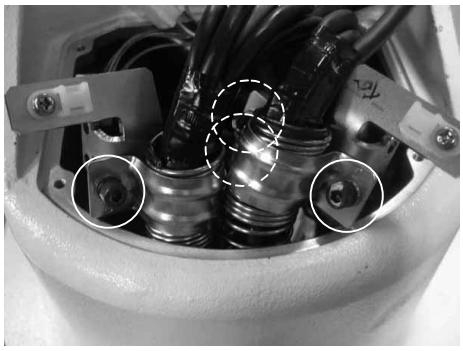

(5) Attach the lower clamp hardware (one each on the right and left sides) to the lower section inside Arm #J1 with the bolts.
4-M4×12 hexagon socket head cap bolts with plain washers

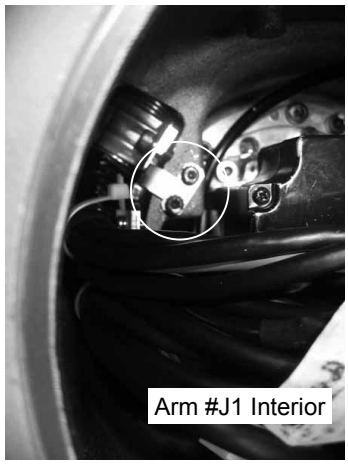

(6) Attach the left clamp hardware to the cables inside Arm #J1 with the bolts. Bind the left clamp hardware and the cables with the wire tie.
2-M5×10 hexagon socket head cap bolts with 2 plain washers

(7) Fasten the left clamp hardware onto the interior of Arm #J1 from the outside with the bolts.
2-M4×16 hexagon socket head cap bolts with plain washers

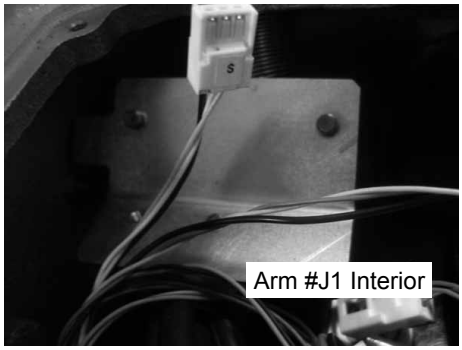

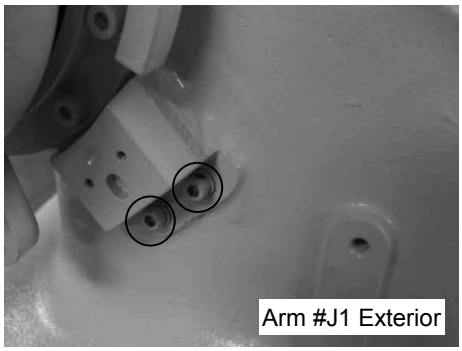

(8) Pass the cables from Arm #J2 to the upper casing.

(9) Fasten the upper and lower clamp hardware to the cables located inside Arm #J2 with the bolts.
4-M5×10 hexagon socket head cap bolts with 2 plain washers

(10) Fasten the center of the cables located inside Arm #J2 with a wire tie.

NOTE

- The springs on the interior of Arm #J2 are divided into upper and lower sides. Attach a wire tie to an area without springs.

(11) Pass the cables from the upper casing side to the wrist side until they protrude from the J6 cover side.

NOTE

- Put your finger into the cable guide cover in order to make it easier to pass the cables through.
- Pass the cables through while pulling on the springs from the upper casing side to prevent the springs from going between the upper casing and the wrist.

(12) Fasten the left clamp hardware to the cables located inside the upper casing with the bolts. Bind the left clamp hardware and the cables with the wire tie.

2-M5×10 hexagon socket head cap bolts with 2 plain washers

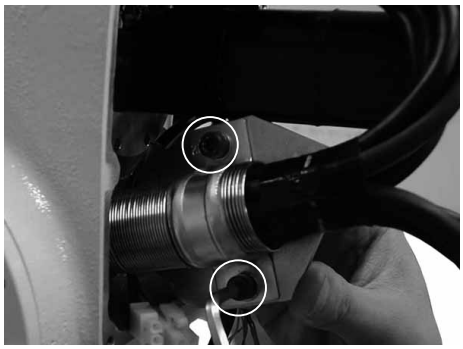

(13) Secure the left clamp hardware with the bolts. (The left clamp hardware and the motor plate are secured with the same bolts.)

2-M4×16 hexagon socket head cap bolts with plain washers

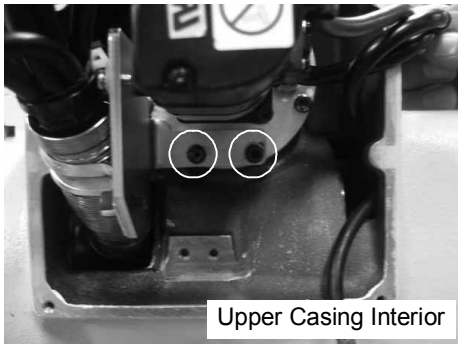

(14) Attach the clamp hardware to the cables inside the wrist with the bolts. Bind the clamp hardware and the cables with the wire tie.

2-M4×16 hexagon socket head cap bolts with plain washers

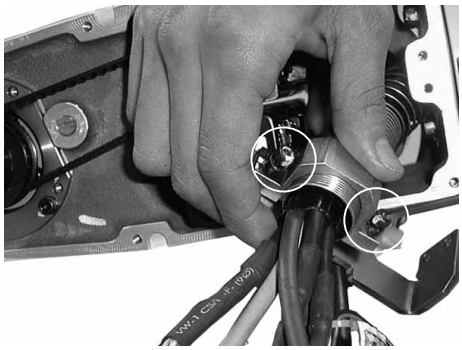

(15) Fasten the clamp hardware to the interior of the wrist with the bolts.

2-M4×10 hexagon socket head cap bolts with plain washers

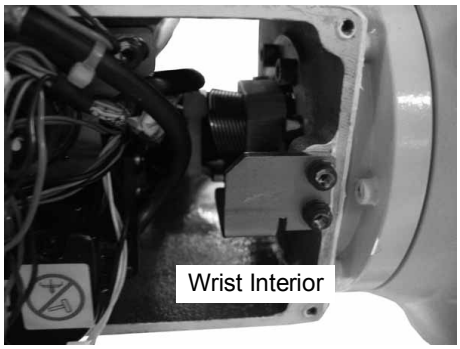

(16) Pull the power cable and the pneumatic tube through to the J5 cover side.

(17) Fasten the upper clamp hardware to the cables inside the upper casing with the bolts.

Bind the upper clamp hardware and the cables with two wire ties.

2-M4×16 hexagon socket head cap bolts with plain washers

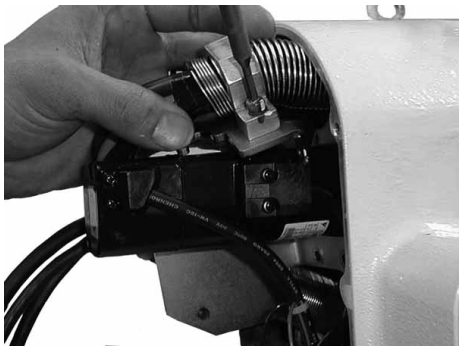

(18) Fasten the upper clamp hardware to the inside of the upper casing along with the motor plate with the bolts. (The upper clamp hardware and the motor plate are secured with the same bolts.)

2-M4×16 hexagon socket head cap bolts with plain washers

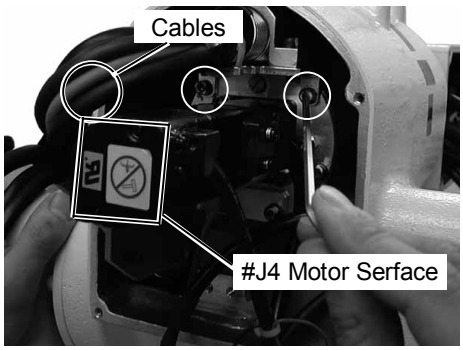

NOTE

- Be sure to fasten the clamp so that the cables in the casing do not extend outer than the J4 motor surface to prevent the cables from contacting with the upper casing cover.

(19) Remove the loosely fastened connector plate in step (3). Insert and remove the connector plate several times, inserting it approximately 2 cm each time, until the grease is worked into the metal.

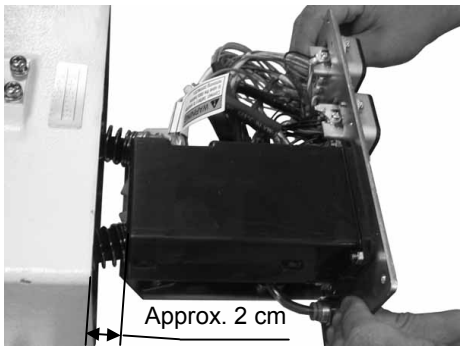

(20) Secure the connector plate with the screws. Make sure that cables are not pinched between the connector plate and the sidewall when you perform this task.

6-M4×8 connector plate mounting screws with spring washers

(21) Pass the cables into the six connector packs (power system and signal system) for the J1, J2, J3, J4, J5, and J6 motors.

(22) Connect the J1 (S), J2 (L), J3 (U), J4 (R), J5 (B), and J6 (T) power and signal cables.

(23) Unplug the batteries for backing up J1, J2, J3, J4, J5, and J6 motor encoders from the BAT and OBT connectors on each motor.

(24) Attach the six connector packs to the connectors.

(25) Bind the six connector packs with 12 wire ties.

(26) Attach the covers listed below.

J6 cover	Cable guide cover	J2 arm cover
J5 cover	Upper casing cover	J1 cover

Refer to the *Maintenance 3 Removing and Installing the Covers* for details on attaching covers.

10.3 Connector Pin Assignments

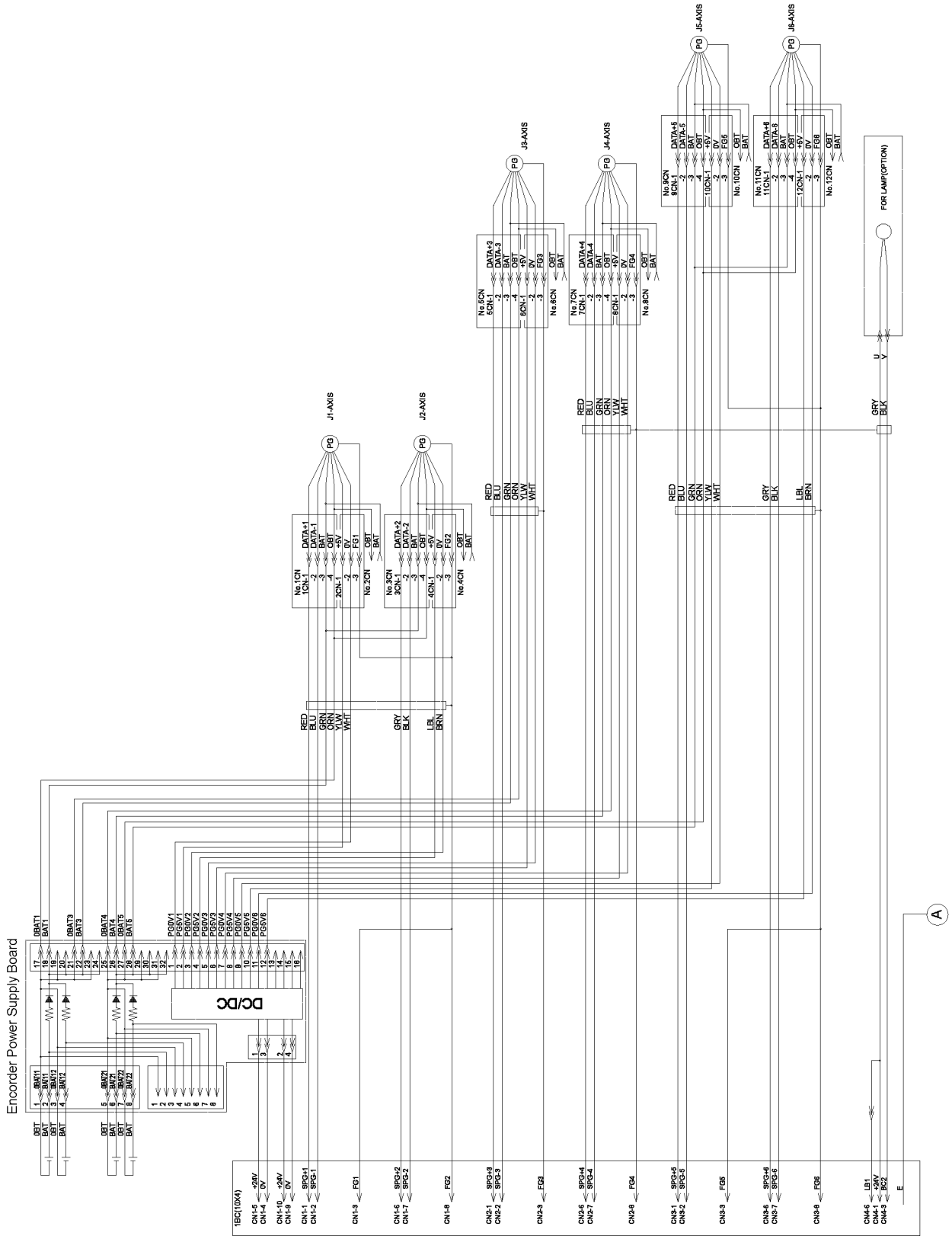

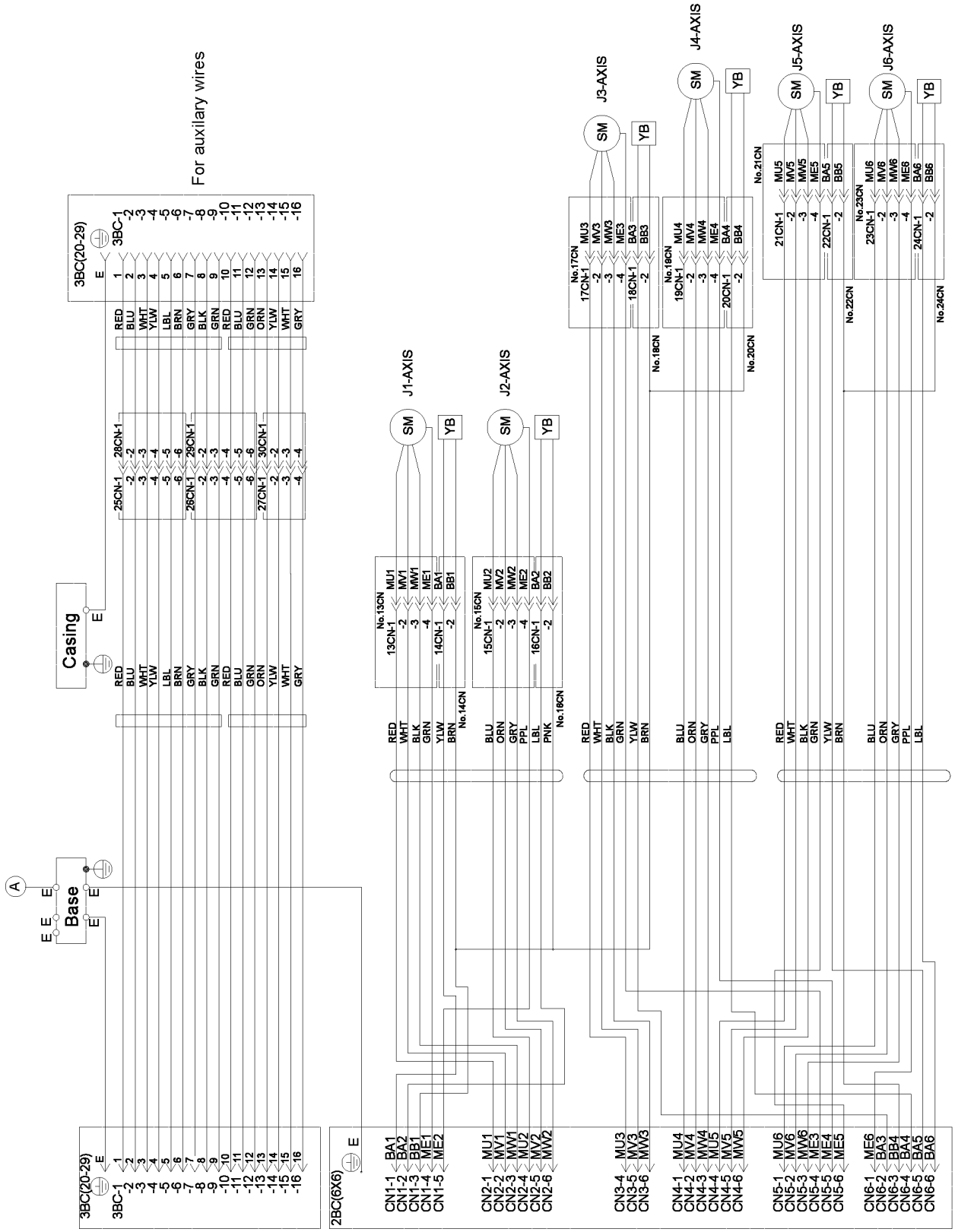
For auxilary wires
3BC(20-29)
3BC-1
Casing
Base
A
E
25CN-1
28CN-1
26CN-1
29CN-1
27CN-1
30CN-1
J1-AXIS
J2-AXIS
J3-AXIS
J4-AXIS
J5-AXIS
J6-AXIS
SM
YB
No.13CN
13CN-1
14CN-1
No.14CN
No.15CN
15CN-1
16CN-1
No.16CN
No.17CN
17CN-1
18CN-1
No.18CN
No.19CN
19CN-1
20CN-1
No.20CN
No.21CN
21CN-1
22CN-1
No.22CN
No.23CN
23CN-1
24CN-1
No.24CN
2BC(6X6)
CN1-1 BA1
CN1-2 BA2
CN1-3 BB1
CN1-4 ME1
CN1-5 ME2
CN2-1 MU1
CN2-2 MV1
CN2-3 MW1
CN2-4 MU2
CN2-5 MV2
CN2-6 MW2
CN3-4 MU3
CN3-5 MV3
CN3-6 MW3
CN4-1 MU4
CN4-2 MV4
CN4-3 MW4
CN4-4 MU5
CN4-5 MV5
CN4-6 MW5
CN5-1 MU6
CN5-2 MV6
CN5-3 MW6
CN5-4 ME3
CN5-5 ME4
CN5-6 ME5
CN6-1 ME6
CN6-2 BA3
CN6-3 BB4
CN6-4 BA4
CN6-5 BA5
CN6-6 BA6

11. Replacing the Battery Unit (Lithium Battery)

WARNING	■ Before performing any replacement procedure, turn OFF the Controller and related equipment, and then pull out the power plug from the power source. Performing any replacement procedure with the power ON is extremely hazardous and may result in electric shock and/or malfunction of the robot system. ■ Do not insert or pull out the motor connectors while the power to the robot system is turned ON. Inserting or pulling out the motor connectors with the power ON is extremely hazardous and may result in serious bodily injury as the Manipulator may move abnormally, and also may result in electric shock and/or malfunction of the robot system. ■ Be sure to connect the AC power cable to a power receptacle. DO NOT connect it directly to a factory power source. To shut off power to the robot system, pull out the power plug from the power source. Performing any work while connecting the AC power cable to a factory power source is extremely hazardous and may result in electric shock and/or malfunction of the robot system.

CAUTION	■ Use meticulous care when handling the lithium battery. Improper handling of the lithium battery as mentioned below is extremely hazardous, may result in heat generation, leakage, explosion, or inflammation, and may cause serious safety problems. <Improper Handling> Attempting to charge / Deforming by pressure Disassembling / Short-circuit (Polarity; Positive/Negative) Connecting batteries improperly / Heating (100°C or more) Exposing to fire / Soldering the terminal of the lithium battery directly Forcing discharge

The life span of the lithium battery is three years. Even if the Manipulator is constantly connected to power, the lithium battery needs to be replaced every three years.

11.1 Precautions of the Data

NOTE

- Always connect the new battery unit before disconnecting the old battery unit. If you disconnect the old battery unit before connecting the new one, all position data for each arm will be lost and you will need to execute the recovery procedure. Refer to *11.3 Data Recovery Procedure* to recover the data.
  When battery replacement is executed in the properly, the recovery procedure is not required.

If the position data has been lost because the low lithium battery power

The following error that warns the voltage reduction appears at starting the Controller (staring up the software). After replacing the battery unit, recover the position data using the procedures described in *11.3. Data Recovery Procedure*.

SPEL CT : Error F-5016 [Absolute encoder backup alarm] occurs.

EPSON RC+4.* : Displays error message that encoder alarm has occurred.

EPSON RC+5.* : Error 5016 [Power supply failure of the absolute encoder.] occurs.

When the motor or gears are removed from the robot for parts replacement

You cannot recover by *11.3. Data Recovery Procedure*. For calibration after parts replacement, refer to *Maintenance 13. Calibration*.

11.2 Battery Unit Replacement Procedure

Maintenance parts, and Tools

	Name	Quantity	Note
Maintenance Parts	Battery unit	1	R13B060001
Tools	Cross-point screwdriver	1	

(1) Turn OFF the power for the Controller.

(2) Disconnect all connectors from the connector plate (outside).

(3) Remove the screws, and then remove the battery cover and gasket from the connector plate.

4-M4×8 mounting screws for the battery cover

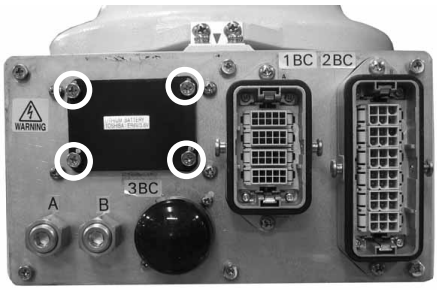

NOTE

- Do not lose the gasket between the battery cover and connector plate.

(4) Pull out the battery unit.

NOTE

- Carefully pull out the battery unit since its cables may catch inside parts.

(5) Connect a new battery unit to another available connector.

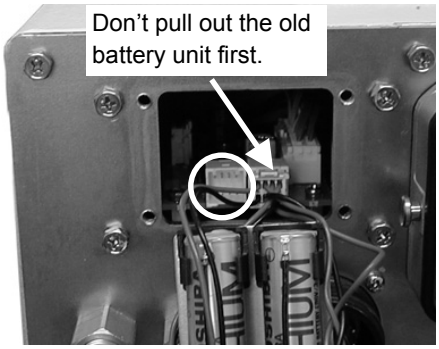

NOTE

- Be sure to connect a new battery unit before disconnecting the old battery unit. If you disconnect the old battery unit without connecting new one, all position data for each arm will be lost and all arms need to be calibrated again.

- Use only the specified battery unit (Code: R13B060001). Connect the positive (+) and negative (–) electrodes correctly.

(6) Pull out the connector of the old battery unit from the signal relay board.

NOTE

- Make a mark (such as the date) on the battery units to avoid pull out wrong battery unit by mistake when both new and old ones are connected.

(7) Put the new battery unit in the connector plate.

(8) Place the gasket between the battery cover and the connector plate. Then, secure the battery cover to the connector plate with the screws.

4-M4×8 mounting screws for the battery cover

(9) Connect the connectors that were disconnected from the connector plate in step (2).

11.3 Data Recovery Procedure

In this section, there are steps to execute some commands. The dialogs and startup procedures used in the following sections depend on which software you are using. Please follow the instructions for the software you are using.

SPEL CT : Click tool bar-<Debug Pane> button to display [Command Execution] window.

EPSON RC+4.* : Select menu-[Tools]-[Monitor Window] to display [Monitor] window.

EPSON RC+5.* : Select menu-[Tools]-[Command Window] to display [Command] window.

(1) Turn ON the Controller with all joints in the motion range.

(2) Reset the encoder.

SPELCT

1) Display [Setup] menu-[Configuration of Robot Manipulator] dialog.

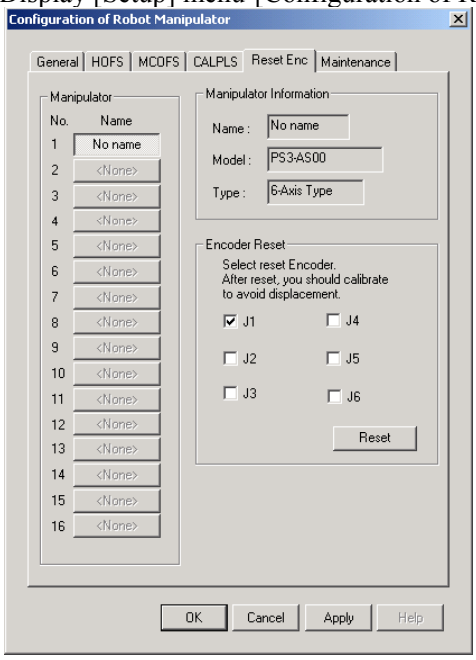

2) Select the [Reset Enc] tab.

3) Select the check box that corresponds to the joint whose encoder you want to initialize.

4) Click the <Reset> button.

5) Following message appears.
"Do you want to reset Encoder for maintenance? After reset, you should calibrate to avoid displacement."

6) Click the <OK> button to initialize the encoder.

7) Restart SPEL CT.

EPSON RC+ 4.*

1) Execute the following command.
```
> EncReset 1,2,3,4,5,6
```

2) Following warning message appears.
"ENCRESET can cause all previously taught points to be wrong. Do you want to continue?"
Click the <Yes> button to initialize the encoder.

3) Restart EPSON RC+4.*.

EPSON RC+ 5.*

1) Execute the following command.
   `> EncReset 1,2,3,4,5,6`
2) Select menu-[Tools]-[Controller] and click the <Reset Controller> button to restart the Controller.

(3) Move the robot to the origin position (0 pulse position).
Release the electromagnetic brake and move the arms manually, or set the jog mode to "Joint" from the [Jog & Teach] and operate the Manipulator in jog motion to match the home position of the joint accurately.
Make sure to match the home position of the joint as accurate as possible visually.

CAUTION	■ The Arm #J4 does not have a mechanical stop. The used of Arm #J4 in motion exceeding the maximum pulse range may cause inner wiring damage to and/or malfunction of the Manipulator.

NOTE

You can check the inner wiring torsion by removing the cable cover.

For details of procedure to remove the cable cover, refer to *Maintenance 3.7 Cable Guide Cover*.

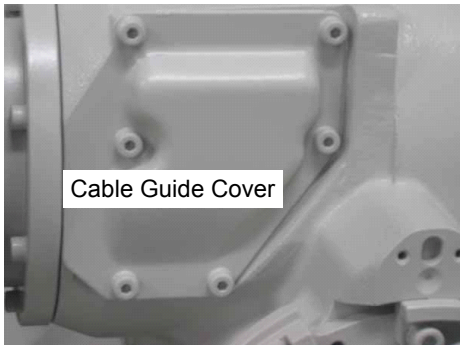

(4) Reset the encoder again by the procedure in step (2).

(5) Restart.

SPEL CT : Restart SPEL CT.

EPSON RC+4.* : Restart EPSON RC+4.*

EPSON RC+5.* : Select menu-[Tools]-[Controller] and click the <Reset Controller> button to restart the Controller.

(6) Execute the following command to move to 0 pulse position.
> Go Pulse(0,0,0,0,0,0)

(7) Be sure to check that all joints have moved to their home positions (0 pulse position).
If no differences are found, recovery is complete.
Joint(s) that did not move to the proper home position will be out of position in multiples of degrees shown in the following table.

Joint	J1	J2	J3	J4	J5	J6
Difference	3 deg.	2.25 deg.	3 deg.	4.5 deg.	4.5 deg.	7.2 deg.

Specify the joint that is out of the home position and the direction of the difference, then change the Hofs values as follows.

Joint #1 out of home position in + direction

> Hofs Hofs(1) – 131072, Hofs(2), Hofs(3), Hofs(4), Hofs(5), Hofs(6)

Joint #1 out of home position in – direction

> Hofs Hofs(1) + 131072, Hofs(2), Hofs(3), Hofs(4), Hofs(5), Hofs(6)

Joint #2 out of home position in + direction

> Hofs Hofs(1), Hofs(2) – 131072, Hofs(3), Hofs(4), Hofs(5), Hofs(6)

Joint #2 out of home position in – direction

> Hofs Hofs(1),Hofs(2) + 131072, Hofs(3), Hofs(4), Hofs(5), Hofs(6)

:

:

:

Joint #6 out of home position in + direction

> Hofs Hofs(1), Hofs(2), Hofs(3), Hofs(4), Hofs(5), Hofs(6) – 131072

Joint #6 out of home position in – direction

> Hofs Hofs(1), Hofs(2), Hofs(3), Hofs(4), Hofs(5), Hofs(6) + 131072

(8) Move to 0 pulse position again.

```
> Go Pulse(0,0,0,0,0,0)
```

(9) Be sure to check that all joints have moved to their home positions (0 pulse position).
If no differences are found, recovery is complete.
Otherwise, repeat step (7) and (8) until no differences are found.

Now, the recovery of the home position is complete.
When you change the Hofs values, make sure to write down the new Hofs values.

12. Replacing the LED Lamp

WARNING	■ Before performing any replacement procedure, turn OFF the Controller and related equipment, and then pull out the power plug from the power source. Performing any replacement procedure with the power ON is extremely hazardous and may result in electric shock and/or malfunction of the robot system. ■ Do not insert or pull out the motor connectors while the power to the robot system is turned ON. Inserting or pulling out the motor connectors with the power ON is extremely hazardous and may result in serious bodily injury as the Manipulator may move abnormally, and also may result in electric shock and/or malfunction of the robot system. ■ Be sure to connect the AC power cable to a power receptacle. DO NOT connect it directly to a factory power source. To shut off power to the robot system, pull out the power plug from the power source. Performing any work while connecting the AC power cable to a factory power source is extremely hazardous and may result in electric shock and/or malfunction of the robot system.

CAUTION	■ Carefully use alcohol, liquid gasket, and adhesive following respective instructions and also instructions below. Careless use of alcohol, liquid gasket, or adhesive may cause a fire and/or safety problems. - Never put alcohol, liquid gasket, or adhesive close to fire. - Use alcohol, liquid gasket, or adhesive while ventilating the room. - Wear protective gear including a mask, protective goggles, and oil-resistant gloves. - If alcohol, liquid gasket, or adhesive gets on your skin, wash the area thoroughly with soap and water. - If alcohol, liquid gasket, or adhesive gets into your eyes or mouth, flush your eyes or wash out your mouth with clean water thoroughly, and then see a doctor immediately.

Maintenance Parts and Tools

	Name	Quantity	Note
Maintenance Parts	Liquid gasket (1206C)	Proper quantity	R13B031201
	LED lamp	1	R13B030002
Tools	Hexagonal wrench (width across flats: 3mm)	1	
	Flat blade screwdriver	1	
	Scraper	1	
	Cross-point screwdriver	1	
	Alcohol	Proper quantity	
	Wiping cloth	1	For wiping liquid gasket

Removal

(1) Remove the upper casing cover.

Refer to the *Maintenance 3.6 Upper Casing Cover* for details on removing the upper casing cover.

(2) Unscrew two screws on the terminals and remove the LED lamp cable.

(3) Loosen the nut and remove the LED lamp.

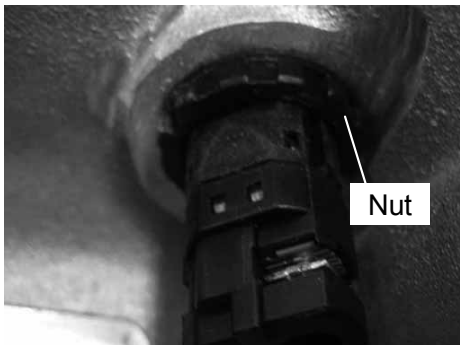

Installation

(1) Attach the LED lamp. Then loosely fasten it with the nut.
(Adjust the LED lamp so that it can move laterally in order to make step (2) easier.)

(2) Secure the LED lamp cable with two screws.

(3) Tighten the nut.

(4) Attach the LED lamp connector and the upper casing cover.

Refer to the *Maintenance 3.6 Upper Casing Cover* for details on attaching the upper casing cover.

13. Calibration

13.1 Overview

After parts have been replaced (motors, reduction gear units, timing belts, etc.), the Manipulator cannot perform positioning properly because a mismatch exists between the origin stored in each motor encoder and its corresponding origin stored in the Controller. After replacing the parts, it is necessary to match (correct) these origins.

The process of aligning the two origins is called "Calibration". Note that calibration is not the same as teaching*.

* "Teaching" means to teach the Controller coordinate points (including poses) anywhere in the operating area of the Manipulator.

WARNING	■ To ensure safety, a safeguard must be installed for the robot system. For details on the safeguard, refer to the *Installation and Design Precautions* in the *Safety* chapter of the EPSON RC+ User's Guide or the *Safety 1.3 Design Precautions* in the SPEL CT User's Guide. ■ Before operating the robot system, make sure that no one is inside the safeguarded area. The robot system can be operated in the mode for teaching even when someone is inside the safeguarded area. The motion of the Manipulator is always in restricted (low speeds and low power) status to secure the safety of an operator. However, operating the robot system while someone is inside the safeguarded area is extremely hazardous and may result in serious safety problems in case that the Manipulator moves unexpectedly.

For SPEL CT, a coordinate point including the arm pose is defined as "pose". The data is called "pose data".
For EPSON RC+, a coordinate point including the arm pose is defined as "point". The data is called "point data".

There are two methods to move the Manipulator during calibration.

- Releasing the electromagnetic brake and moving the arms manually
  For details, refer to the *Setup & Operation 1.5 How to Move Arms the Electromagnetic Brake is Applied to*.
- Moving the Manipulator using Jog & Teach.
  For details, refer to the following respective sections.
  SPEL CT : *Introduction 6. Teaching* in the SPEL CT User's Guide
  EPSON RC+ 4.* : *Jog & Teach Command (Tools Menu)* in the chapter *The EPSON RC+ GUI* in the *EPSON RC+ User's Guide*
  EPSON RC+ 5.* : *5.11.1 Robot Manager Command Tools: Robot Manager: Jog and Teach Page* in the *EPSON RC+ 5.0 User's Guide*

It is recommended that you move the Manipulator using Jog & Teach since moving the Manipulator while releasing the electromagnetic brake involves risk.

CAUTION	■ Normally, release the brake of a single joint at a time. Take extra care to release the brakes of two or more joints simultaneously from necessity. Releasing the brakes of two or more joints simultaneously may cause hands and fingers to be caught, serious bodily injury and/or severe equipment damage to the Manipulator as the arms of the Manipulator may move in unexpected directions. ■ Be careful of the arm falling when releasing the brake. While the brake release switch is pressed, the Manipulator's arm falls by its own weight. The arm falling may cause hands and fingers to be caught and/or may cause equipment damage to or malfunction of the Manipulator.

NOTE

- For details about the basic pose, refer to the *Setup & Operation 3.6 Setting the Basic Pose for Calibration.*
- Whenever possible, calibrate the origin one joint at a time. (Replace parts one joint at a time whenever possible.) If you calibrate the origins for multiple joints simultaneously, it will be more difficult to verify their origins and obtain the origin positions.
  However, joint #5 cannot be calibrated alone according to the structure of the Manipulator. Make sure you calibrate joint #6 at the same time.

Calibration Flowchart

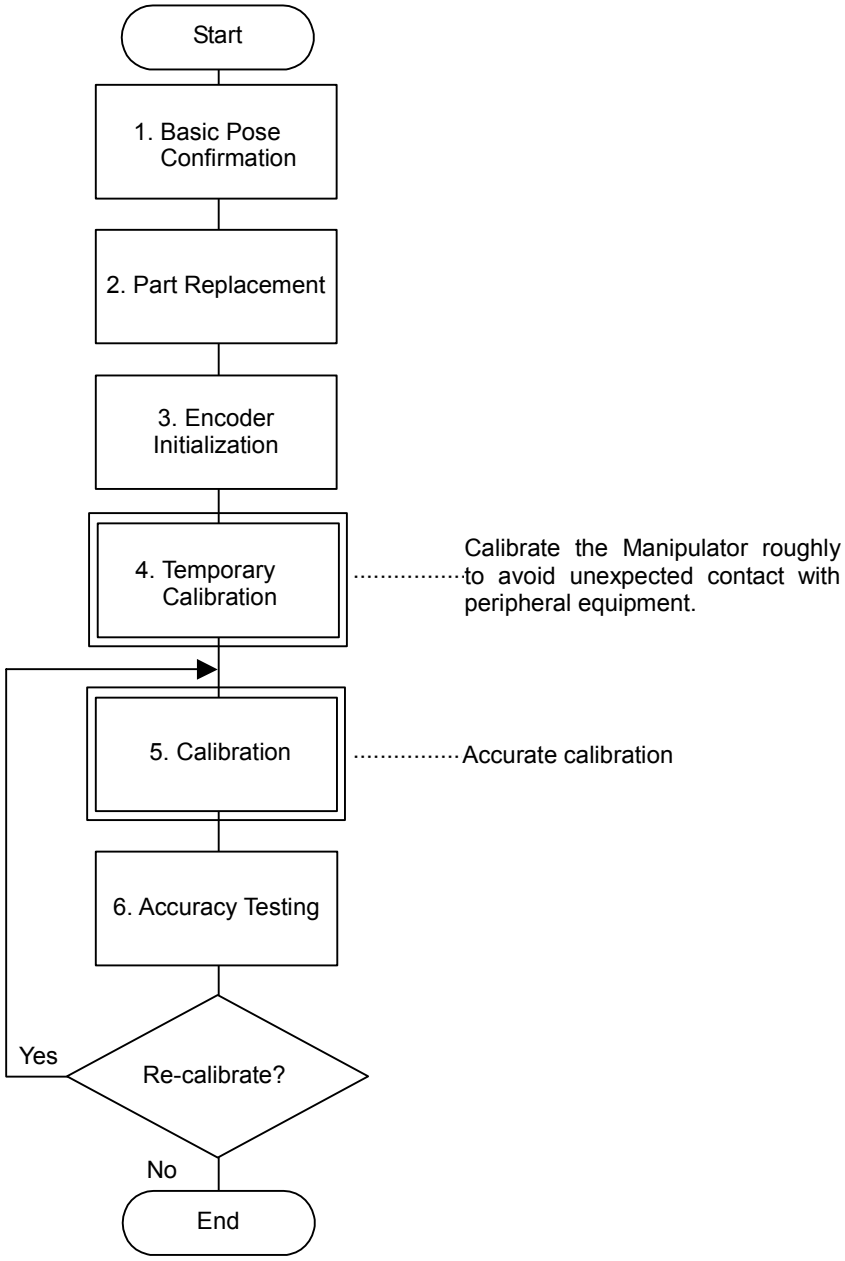

13.2 Calibration Procedure

Command Input

Calibration procedures include command execution. The name of the windows and startup procedures are different depending on the software used.

SPEL CT : Click the tool bar-<Debug pane> button to display the [Command Execution] window.

EPSON RC+ 4.* : Select the menu-[Tools]-[Monitor] to display the [Monitor] window.

EPSON RC+ 5.* : Select the menu-[Tools]-[Command Window].

The information above is omitted in the calibration procedure.

Jog Motion

The process to set the jog motion is included in the calibration procedures. The name of the windows and startup procedures are different depending on the software users use.

SPEL CT : Select menu-[Jog & Teach] to display the [Jog & Teach] panel.

EPSON RC+ 4.* : Select [Tools]-[Jog & Teach] to display the [Jog & Teach] window.

EPSON RC+ 5.* : Select menu-[Tools]-[Robot Manager] and select the [Jog & Teach] page.

The panel, window, or page above are indicated as [Jog & Teach] in the calibration procedure.

The following icons are put beside appropriate text when different commands should be input depending on the software.

SPEL CT | EPSON RC+

Follow steps 1 to 7 described below in order to calibrate the origin.

1. Basic Pose Confirmation

   Verify the recorded pulse values of the basic pose obtained in the *Setup & Operation 3.6 Setting the Basic Pose for Calibration*.

2. Part Replacement

   Replace parts as dictated by this manual. Be careful not to injure yourself or damage parts during part replacement.

3. Encoder Initialization

   Turn ON the Controller when all joints are in the motion range.

   SPEL : Error F-5016
   [Absolute Encoder backup alarm] occurs

   EPSON RC+ : “Encoder alarm has occurred. Check robot battery. EPSON RC+ must be restarted.” is displayed

   Initialize the encoder at the current position and reset the error.

   Initialize the encoder using one of the following procedures.

SPEL CT

From the [Setup] menu, select the [Configuration of Robot Manipulator]. The following dialog box will open. Select the [Reset Enc] tab.

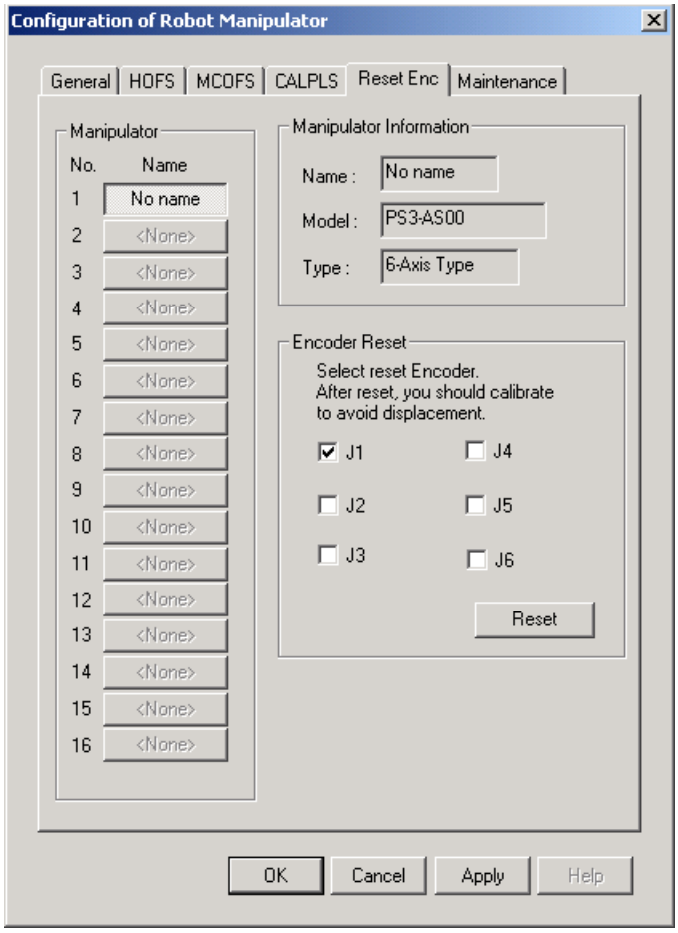

Select the check box that corresponds to the joint whose encoder you want to initialize and click the <Reset> button. The dialog shown below will be displayed.

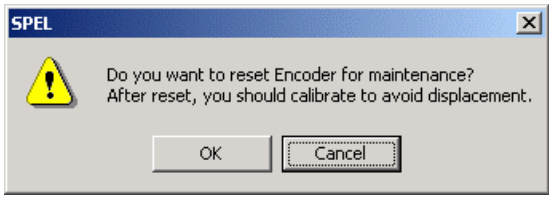

Click the <OK> button to initialize the encoder.
Restart SPEL CT after resetting the encoder.

EPSON RC+

Execute the following command at the [Monitor Window].
`>Encreset` [The joint number (1 to 6) corresponding to the encoder will be reset]

For EPSON RC+ 4.*, the dialog box shown below will be displayed.

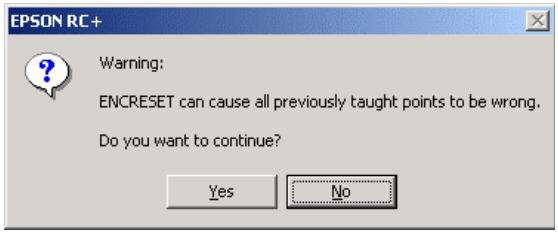

Click the <Yes> button to initialize the encoder.
For EPSON RC+ 4.*, restart EPSON RC+ after resetting the encoder.

For EPSON RC+ 5.*, select Tools | Maintenance, then click the [Restart Controller] button.

After resetting the error, the motor encoder of the parts replaced joint is initialized. Set the jog mode to "Joint" from the [Jog & Teach] and operate the Manipulator in jog motion to match the home position of the joint accurately.

When the joint does not move to the home position, operate the Manipulator to match the tram mark placed in *Setup & Operation 3.6 Setting the Basic Pose for Calibration* as accurate as possible.

Initialize the joint encoder when the joint matches the home position or the tram mark.

For the encoder initialization, refer to the procedure indicated above.

NOTE

- When the origin of Joint #J5 is calibrated, Joint #J6 will be out of position.
  (Due to the structure of the Manipulator, any offset in the position of Joint #J5 affects Joint #J6.)
  Calibrate the origin of Joint #J6 at the same time when calibrating Joint #J6.

4. Rough Calibration

NOTE

Calibrate the origin of Joint #J5 at the same time when calibrating Joint #J6.

Select either the poses (points) of the basic pose you previously set in the *Setup & Operation 3.6 Setting the Basic Pose for Calibration* or the currently registered pose (point) data that makes it easy to verify the accuracy of the joint whose origin you want to calibrate. Move the Manipulator to the selected pose (point) while avoiding interference with peripheral equipment.

To perform temporary calibration, input the pulse value of the specified pose data (point data).
For example, when the specified pose data (point data) is "P1," execute the following command.

```
>Calpls Ppls(P1,1), Ppls(P1,2), Ppls(P1,3), Ppls(P1,4), Ppls
  (P1,5), Ppls(P1,6)
```

Perform the temporary calibration. Input one of the following commands according to the joint being calibrated.

Joint #1 : `>Calib 1`
Joint #2 : `>Calib 2`
Joint #3 : `>Calib 3`
Joint #4 : `>Calib 4`
Joint #5 : `>Calib 5,6`
Joint #6 : `>Calib 6`

5. Calibration (Accurate Positioning)

Move the joint* being calibrated to the specified pose (point) by motion command.

*You must also move Joints #1 - #4 to the position when calibrating Joint #5.

For example, when the specified pose data (point data) is “P1”, “Motor On” is executed from [Robot Control Panel] ([Control Panel] for EPSON RC+ 5.* and after), and “Go P1” is executed from [Jog & Teach].

Accurately conform the calibrating joint* to the specified pose data (point data) by jog command.

*You must also move Joint #5 and #6 to the position when calibrating Joint #5.

Select the Joint jog mode from the [Jog & Teach] to execute the jog motion.

Perform the calibration. Input one of the following commands according to the joint being calibrated.

Joint #1 : `>Calib 1`
Joint #2 : `>Calib 2`
Joint #3 : `>Calib 3`
Joint #4 : `>Calib 4`
Joint #5 : `>Calib 5,6`
Joint #6 : `>Calib 6`

6. Accuracy Testing

Move the Manipulator into a different pose (point) to verify the reproducibility of the position. If accuracy is inadequate, it may be necessary to re-calibrate the origin using a different pose (point). You must set the pose (point) again if reproducibility cannot be assured through calibration.

13.3 Calibration Jig

Jigs such as the one described in this section are necessary in order to set the reference points for calibration when installing the Manipulator. (In practice, there are instances where your end effector can be used.)

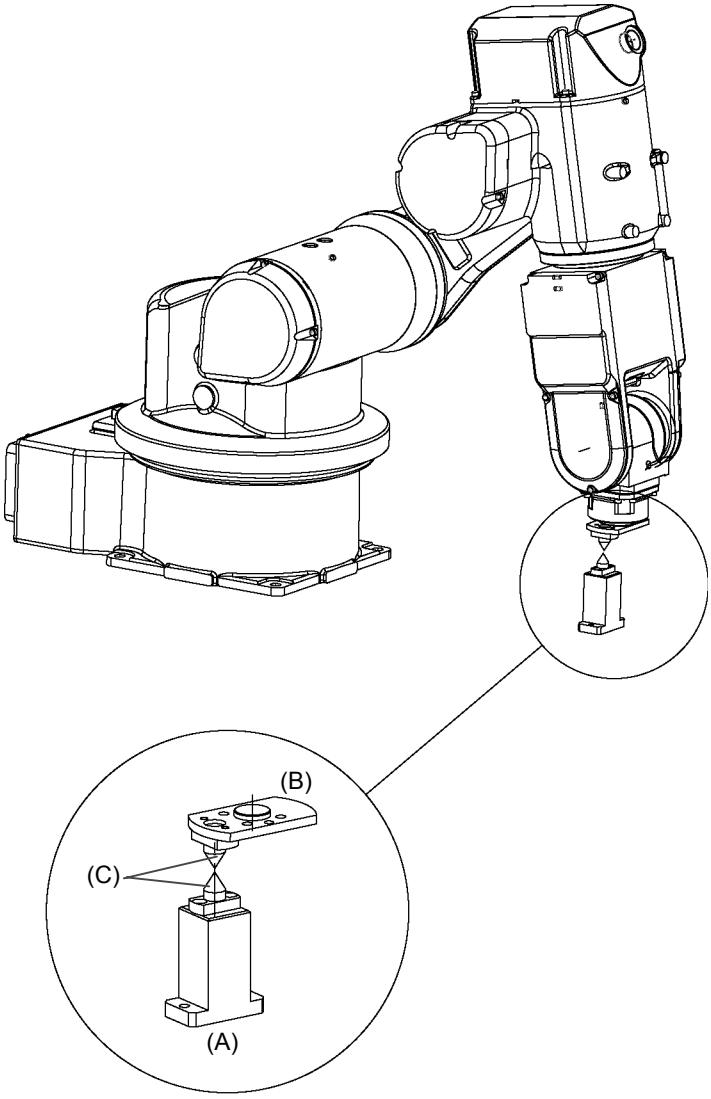

[Unit: mm]

°: deg.

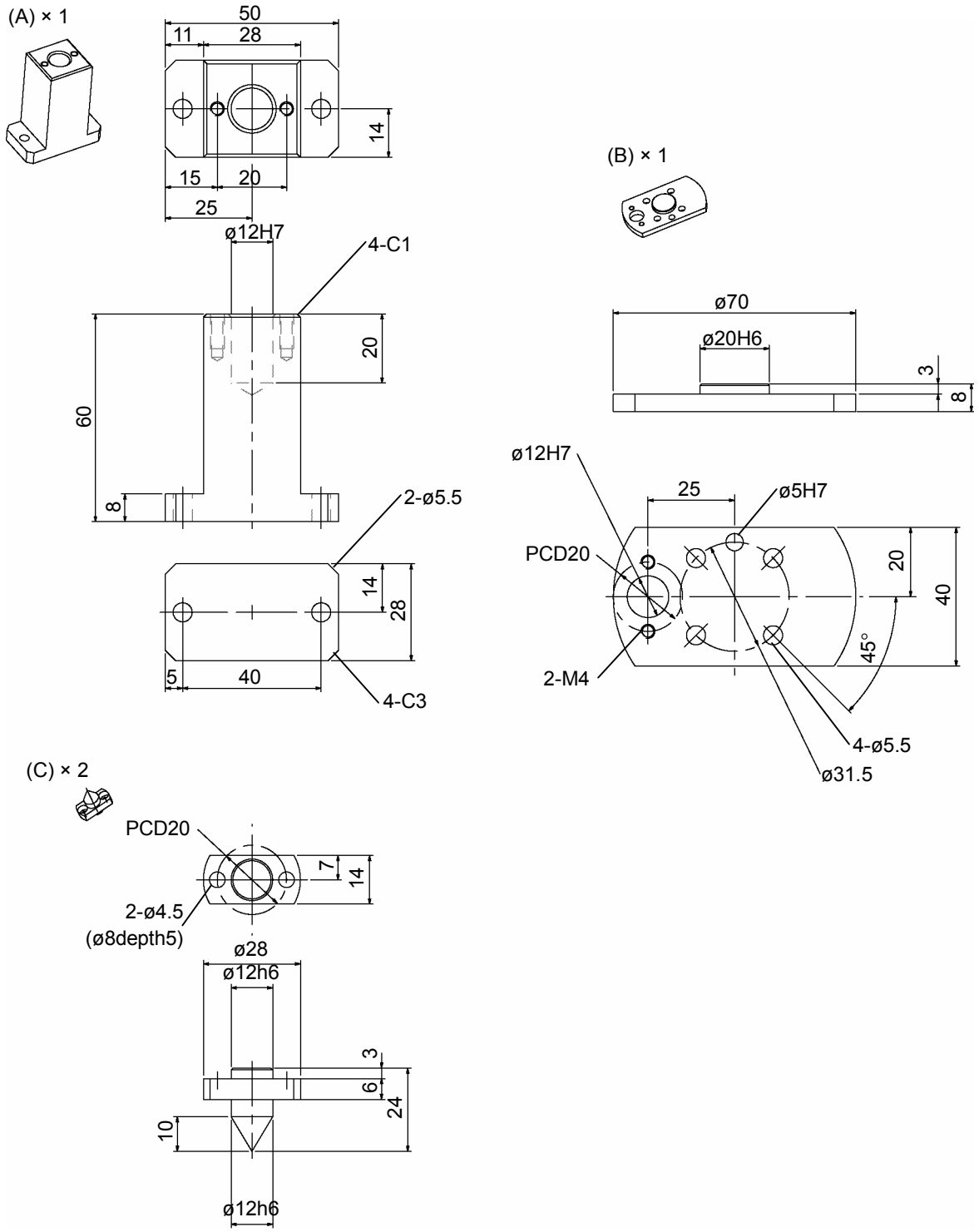
(A) × 1
50
11
28
14
15
20
25
ø12H7
4-C1
20
60
8
2-ø5.5
14
28
5
40
4-C3
(B) × 1
ø70
ø20H6
3
8
ø12H7
25
ø5H7
PCD20
20
40
45°
2-M4
4-ø5.5
ø31.5
(C) × 2
PCD20
7
14
2-ø4.5
(ø8depth5)
ø28
ø12h6
3
6
24
10
ø12h6

14. Maintenance Parts List

Be sure to specify the proper codes when ordering maintenance parts.

Part Name			Code	Note
AC Servo Motor		For J1 and J2*1	R13B000602	200W with brake
		For J3*1	R13B000603	100W with brake
		For J4*1, J5, J6*1	R13B000604	50W with brake
Reduction Gear Unit		For J1	R13B010002	
		For J2*1	R13B010003	
		For J3*1	R13B010004	
		For J4*1	R13B010005	
		For J5	R13B010006	
		For J6*1	R13B010007	
Timing Belt		For J5	R13B030202	60S4.5M279
		For J6	R13B030203	60S4.5M297
Grease	Reduction gear	For J1, J2, J3, J4, J5, J6	R13B030302	4BNo2 (500 g)
	Base	For J1	R13B030301	Multemp PS NO.2-A (300 g)
	Oil seal	For J6	R13B030303	SRL (400 g)
Liquid Gasket		For J1, J2, J3, J4, J5, J6	R13B031201	1206C
LED Lamp			R13B030002	
M/C Power Cable			R12B020401	3 m
M/C Signal Cable			R12B020701	3 m
Cable Unit			R13B020003	With connector plate
Battery Unit			R13B060001	
Bearing		For J6	R13B030801	
Oil Seal	For motor shafts	For J1 and J3	R13B031208	
		For J2	R13B031209	
		For J4	R13B031210	
	For rotator	For J6	R13B031203	
Adhesive			R13B031701	Loctite 242 (250 cc)
O-ring	For motor plate	For J6	R13B031204	S63
		For J4	R13B031205	S60
		For J3	R13B031206	S90
		For J2	R13B031207	S110
Battery for backing up motor encoder*2			R13B060002	
Brake release unit for EUROPE			R12B120801	For Europe
Brake release unit for USA			R12B120802	For USA and Japan

*1 When you replace the motor and the reduction gear unit, we recommend replacing the O-ring at the same time. (Except the motors and the reduction gear units for J1 and J5)
J2: O-ring S110
J3: O-ring S90
J4: O-ring S60
J6: O-ring S63

*2 The battery for backing up a motor encoder is only used for retaining the motor position data during maintenance (cable replacement, etc.). It is not used for the Manipulator itself.
Even storing a battery consumes battery power. When three years have passed since you purchased a spare battery, replace it with a new one or measure the battery voltage before using it.